LED-W560

SPECIFICATIONS

*Please note: The inch sizes stated are just an indication, combined with the weight and VESA sizes. The maximum weight and VESA size are absolute restrictions for the products and should not be exceeded.

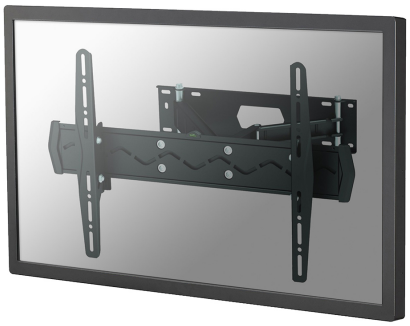

Neomounts



Neomounts

LED-W560

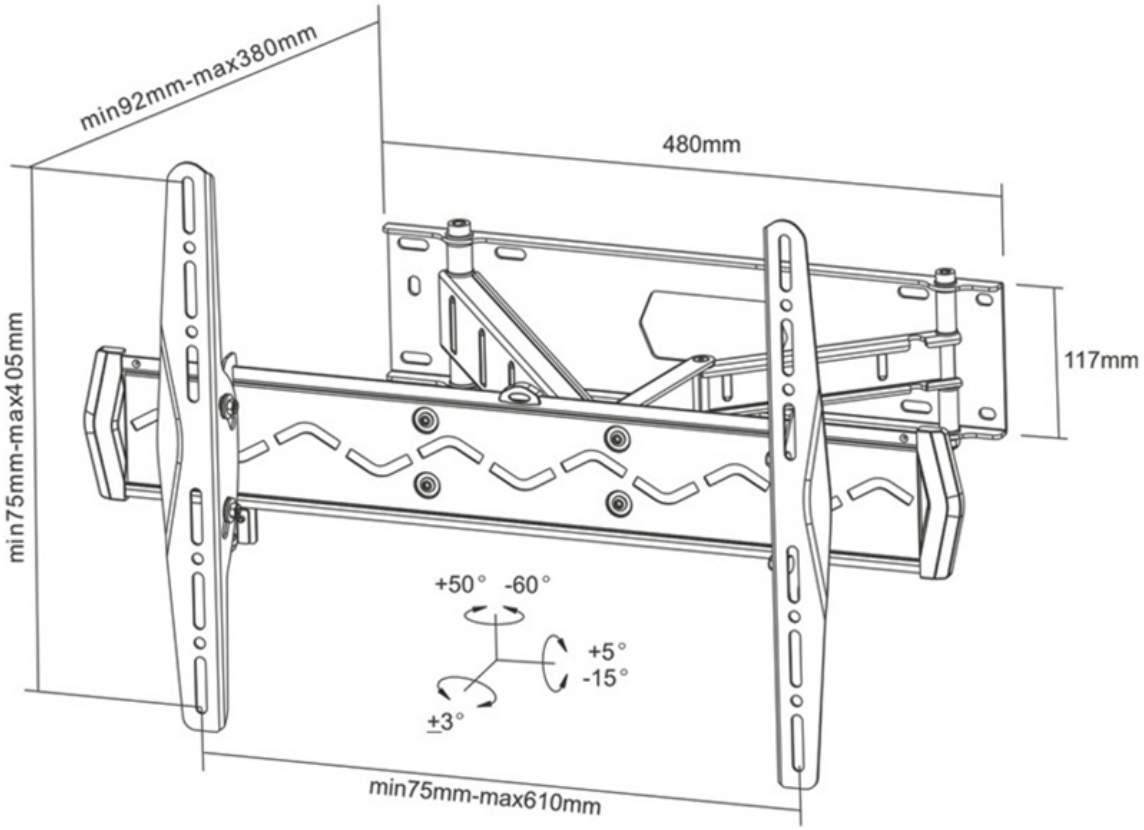

Neomounts B.V. | Wateringweg 62 | 2031 EJ Haarlem " The Netherlands | +31 (0)23-5478888 | info@neomounts.com | www.neomounts.com
Chamber of Commerce 37076185 | VAT NL805154383B01 | BIC RABONL2U | IBAN NL51RABO0375403299