Original operating instructions

Refrigerator

Read the operating instructions before switching on for the first time

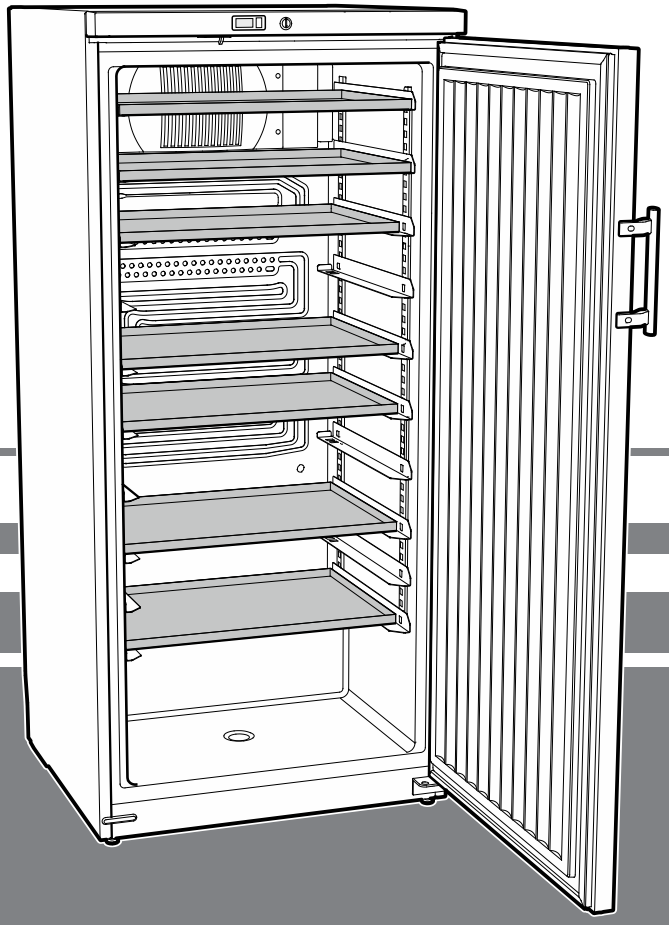

BKv 5040

7083 208-00

LIEBHERR

Content

Priority of warnings 10
Safety instructions and warnings 10
Symbols on the appliance 11
Intended use 11
Foreseeable incorrect use 11
Declaration of conformity 11
Noise emissions from the appliance 11
Climate rating 11
Appliance dimensions 12
Levelling the appliance 12
Setting up 12
Electrical connection 12
Equipment 13
Safety lock 13
Temperature display 13
Switching the appliance on and off 13
Setting the temperature 13
Humidity function 13
Cleaning 14
Malfunctions 14
Shutting your appliance down 14
Disposal notes 14
Changing over door hinges 15
Adjusting the lateral tilt of the door 17

Priority of warnings

⚠ **DANGER**	identifies a situation involving direct danger which, if not obviated, may result in death or severe bodily injury.
⚠ **WARNING**	identifies a dangerous situation which, if not obviated, may result in death or severe bodily injury.
⚠ **CAUTION**	identifies a dangerous situation which, if not obviated, may result in minor or medium bodily injury.
NOTICE	identifies a dangerous situation which, if not obviated, may result in damage to property.
Note	identifies useful information and tips.

Safety instructions and warnings

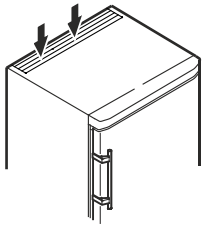

- **WARNING:** do not seal ventilation openings on the appliance housing or enclosure.
- **WARNING:** only use the mechanical devices or other aids recommended by the manufacturer to help speed up the defrosting process.
- **WARNING:** do not damage the refrigerant circuit.
- **WARNING:** do not use any electrical devices in the refrigerator compartment which do not comply with the design recommended by the manufacturer.
- **WARNING:** the mains cable must not be damaged while installing the appliance.
- **WARNING:** multi-sockets or distributor strips and other electronic devices (such as halogen transformers) must not be positioned and operated at the rear of appliances.
- **WARNING:** this appliance must be secured as described in the operating instructions to rule out any potential risks due to its instability.
- This appliance can be used by children of 8 years old and over, and also by persons with restricted physical, sensory or mental capacity or lack of experience and knowledge, if they are supervised or have been instructed on safe use of the appliance and understand the resulting risks. Children must not be allowed to play with the appliance. Cleaning and user maintenance must not be carried out by children without supervision.
- Do not store any explosive substances, such as aerosol containers with flammable propellant gas, inside the appliance.
- To prevent injury and damage to property, the appliance should only be installed by two people.
- After unpacking it, check the appliance for signs of damage. Contact the supplier if it is damaged. Do not connect the appliance to the mains power supply.
- Avoid prolonged skin contact with cold surfaces (e.g. chilled/frozen products). If necessary, take safety action (e.g. gloves).
- All repairs and work on the appliance may only be carried out by customer service personnel or other trained personnel. The same applies to changing the mains power cable.
- Only carry out repair and other work on the appliance when the mains plug has visibly been disconnected.

- Only install, connect and dispose of the appliance as described in these operating instructions.
- In the event of a fault, pull out the plug or switch off the fuse.
- When disconnecting the appliance from the mains, pull on the plug. Do not pull on the cable.
- Ensure that food which has been stored for too long is not consumed. Dispose of food which has been stored for too long properly.
- Do not allow naked flames or ignition sources to enter the appliance.
- Alcoholic drinks or other vessels containing alcohol should be sealed tightly for storage.

Symbols on the appliance

	The symbol can be located on the compressor. It refers to the oil in the compressor and indicates the following danger: swallowing or inhaling can be fatal. This is only relevant for recycling. There is no danger in normal operation.
	Warning about inflammable substances.
	A sticker to this effect may be applied to the rear of the appliance. It refers to the foampadded panels in the door and/or the housing. This is only relevant for recycling. Do not remove the sticker.

Intended use

The appliance is suited only for cooling food.

This appliance may be used to display food and drink in retail sales outlets. It is suitable for commercial use, for example in restaurants, canteens, hospitals and in commercial businesses such as bakeries, butchers' shops, supermarkets, etc.

This professional refrigeration appliance is designed for storing chilled food. It is **not** designed for the presentation of food or for the removal of food by customers.

The appliance is designed for use in enclosed rooms. All other types of use are not permitted.

Foreseeable incorrect use

Do not use the appliance for the following applications:

- Storage and cooling of medicines, blood plasma, laboratory preparations or similar substances and products subject to the Medical Devices Directive 2007/47/EC.
- Use in potentially explosive atmospheres.
- Use outdoors or in areas where it is exposed to splash water or damp conditions.

Incorrect use of the appliance will result in damaging or spoiling the goods stored in it.

Declaration of conformity

The refrigerant circuit has been tested for leaks. The appliance complies with the relevant safety regulations and EU Directives 2006/42/EG, 2014/30/EU, 2009/125/EG and 2011/65/EU.

Noise emissions from the appliance

The noise level while the appliance is operating is below 70 dB(A) (relative noise level 1 pW).

Climate rating

The climate rating indicates at what room temperature the appliance may be operated to achieve full cooling capacity and what the maximum humidity level in the area around the appliance may be to ensure that no condensation forms on the exterior housing.

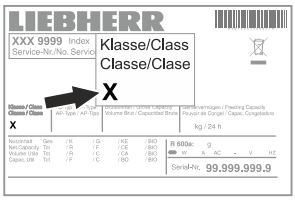

The climate rating is indicated on the type plate.

Climate rating	Max. room temperature	Max. relative humidity
3	25 °C	60%
4	30 °C	55%
5	40 °C	40%
7	35 °C	75%

The minimum room temperature at the place of installation is 10°C.

Appliance dimensions

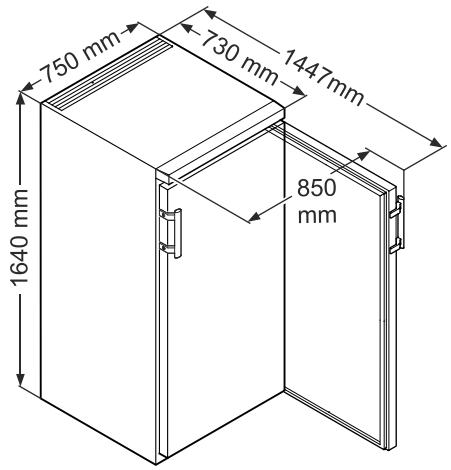

Description of the appliance

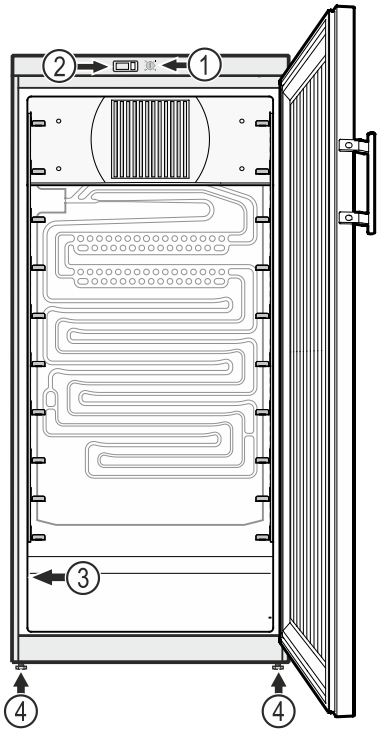

(1) Temperature control
(2) Temperature display
(3) Type plate
(4) Adjustable-height feet

Levelling the appliance

Compensate floor unevenness using the adjustable feet.

NOTICE

The appliance must be aligned horizontally and vertically. If the appliance is not level, the main body of the appliance can be deformed and the door will not close properly.

Setting up

- Avoid positioning the appliance in direct sunlight or near cookers, radiators and similar sources of heat.
- The more coolant there is in the appliance, the larger the room in which the appliance is installed must be. If the room is too small, any leak may create a flammable mixture of gas and air. For each 8 g of coolant the installation space must be at least 1 m^3. Information on the coolant is on the model plate inside the appliance.
- Always install the appliance directly against the wall.
- If several appliances are installed next to each other, leave a gap of 30 mm between them.

  If this gap is too narrow, condensation forms between the side walls.

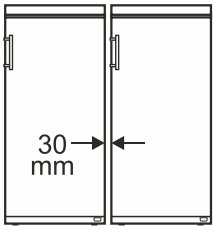

Electrical connection

Only operate the appliance with **alternating current (AC)**.

The permissible voltage and frequency are indicated on the type plate. The position of the type plate is shown in the section entitled **Description of the appliance**.

The socket must be properly earthed and protected by a fuse. The tripping current of the fuse must be between 10 A and 16 A.

The socket must not be situated behind the appliance and must be easily accessible.

Do not connect the appliance using an extension cable or extension socket.

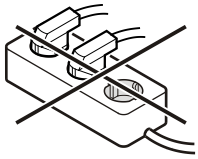

Do not use stand-alone inverters (conversion of direct current to alternating current/three-phase current) or energy-saving plugs. Risk of damage to the electronic control system!

Equipment

Fit the supplied shelf rails to the right and left of the appliance.

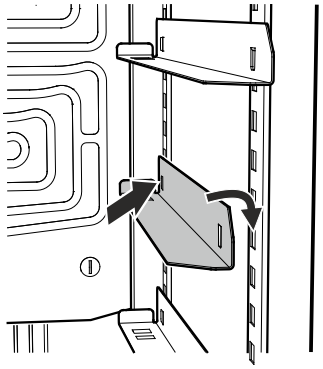

Suspend the rails at the desired height, by inserting into the rear clip-in strip first and then clipping in at the front.

Stop brackets for shelf rails

When installing the shelf rails in the top 7 positions of the clip-in strip, one of the supplied stop brackets must be inserted in the corresponding rail.

This stops the baking tray from hitting the fan cover.

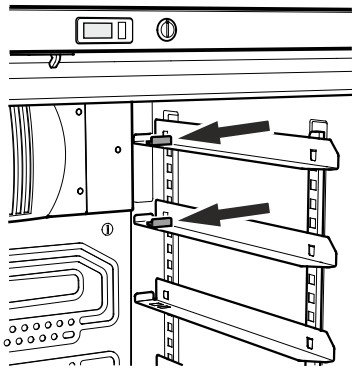

Inserting the stop bracket

Insert the stop bracket in the rail from above and slide it backwards.

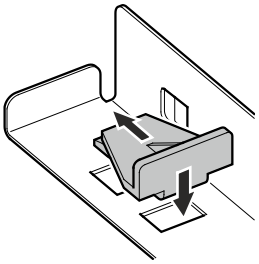

Safety lock

The lock in the appliance door is equipped with a safety mechanism.

Locking the appliance

- Insert the key as shown by arrow **1**.
- Turn the key 90°.

To unlock the appliance, the same procedure must be repeated in the same order.

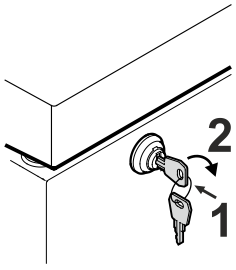

Temperature display

The temperature display is powered by a battery which is available from your specialist dealer.

Changing the battery

- Open the battery compartment using a small screwdriver.
- Replace the battery.
- Close the battery compartment.

If **Er** or **HH** appears in the display, the appliance has a fault. Consult the customer service department indicating the fault number displayed.

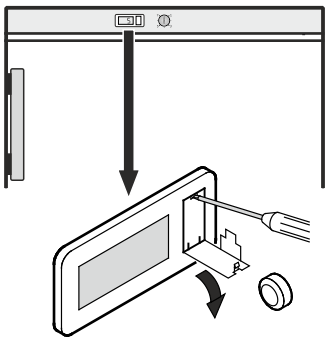

Switching the appliance on and off

You are recommended to clean the interior of the appliance before switching it on for the first time (see **Cleaning**).

Switching the appliance on

Connect the appliance to the mains - the appliance is switched on.

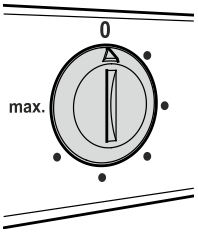

Switching the appliance off

Pull out the mains plug or set the temperature control to **0**.

Note

When the temperature control is turned to "0", the refrigeration system is switched off, but the appliance is not completely disconnected from the mains.

Setting the temperature

Set the temperature inside the appliance using the temperature control.

When the control is turned to "**max.**", the temperature inside the appliance is at its lowest.

Set the control between "**0**" and "**max.**" as required.

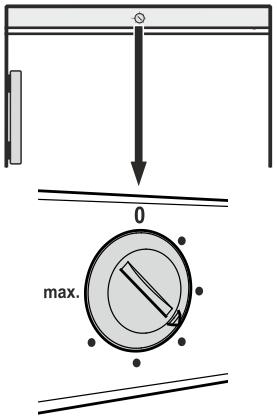

Note

The temperature in the warmest area of the interior may be higher than the temperature setting.

If the door is left open for a lengthy period, the temperature in the appliance's compartments may rise dramatically.

Humidity function

Certain foods must be stored in a humid atmosphere (e.g. baked goods).

To prevent such foods from drying out, the humidity function must be activated.

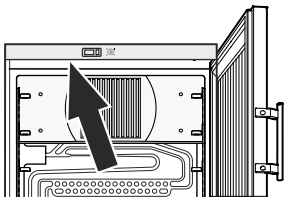

Switch set to ON →

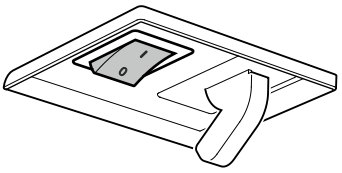

High humidity inside the appliance

Switch set to OFF →

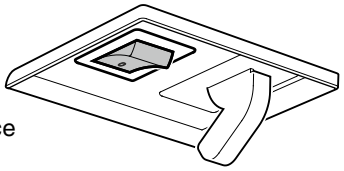

Low humidity inside the appliance

Defrosting

The refrigerator compartment defrosts automatically.

When operating at a very cold thermostat setting, the interior rear wall may ice up. In this case, the appliance must be defrosted manually.

- **Pull out the mains plug!**
- Remove the food from the appliance and store in a cool place.
- Leave the door of the appliance open while defrosting. After defrosting mop up the remaining water and clean the appliance.

Cleaning

⚠ WARNING

Before cleaning, always disconnect the appliance from the mains. Pull out the plug or switch off the fuse.

⚠ CAUTION

Risk of damage to the appliance components and risk of injury due to hot steam.

Do not use steam cleaning equipment to clean the appliance.

NOTICE

Surfaces which may come into contact with food and accessible drain systems must be cleaned at regular intervals.

- Clean the inside, equipment parts and outer walls with lukewarm water and a little detergent. Do not use chemical solvents or any cleaning agents containing sand or acid.
- To avoid short-circuits, ensure no cleaning water penetrates into the electrical components when cleaning the appliance.
- Dry all parts well with a cloth.
- Use a commercially available stainless-steel cleaning agent for stainless-steel appliances.
- Do not damage or remove the type plate on the inside of the appliance. It is very important for servicing purposes.

Malfunctions

You may be able to rectify the following faults by checking the possible causes yourself:

- **Appliance does not function:**

– Is the appliance switched on?
– Is the plug correctly fitted in the mains socket?
– Is the fuse intact?

- **The temperature is not low enough:**

– Is the temperature setting correct (see "Setting the temperature")?
– Does the separately installed thermometer show the correct reading?
– Is the ventilation system working properly?
– Is the appliance set up too close to a heat source?

If none of the above causes apply and you cannot rectify the fault yourself, contact the nearest customer service department stating the type designation ①, service number ② and appliance number ③ as indicated on the type plate.

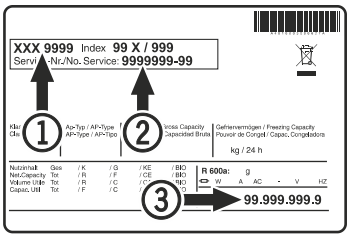

The position of the type plate is shown in the section entitled **Description of the appliance**.

Shutting your appliance down

If the appliance is left empty for a lengthy period, it must be switched off, defrosted, cleaned and dried and the door is to be left open to prevent mould formation.

Disposal notes



The appliance contains reusable materials and should be disposed of properly - not simply with unsorted household refuse. Appliances which are no longer needed must be disposed of in a professional and appropriate way, in accordance with the current local regulations and laws.

Do not damage the refrigerant circuit of an appliance that is no longer needed during its disposal.

This appliance contains inflammable gases in the refrigerant circuit and insulation foam.

Your local council or a waste disposal contractor can provide information about how to dispose of the appliance correctly.

Changing over door hinges

Door hinges should only be changed by a trained expert.

Changing the door hinges must be done by two people.

1. Remove screw from lower hinge bracket.

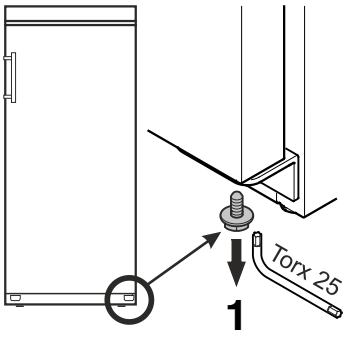

2. Open the door approx. 45° and lift upwards.

Important

As a result of its heavy weight, the door must be held secure by one person.

3. Push the pin upwards using your fingertip.

4. Pull the door to the front and remove it downwards.

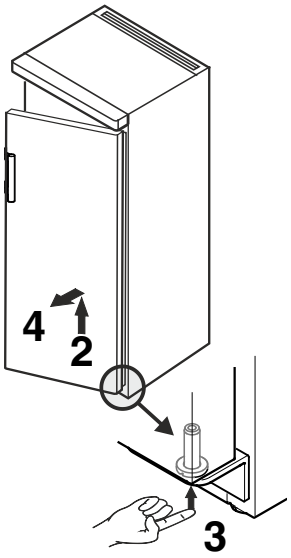

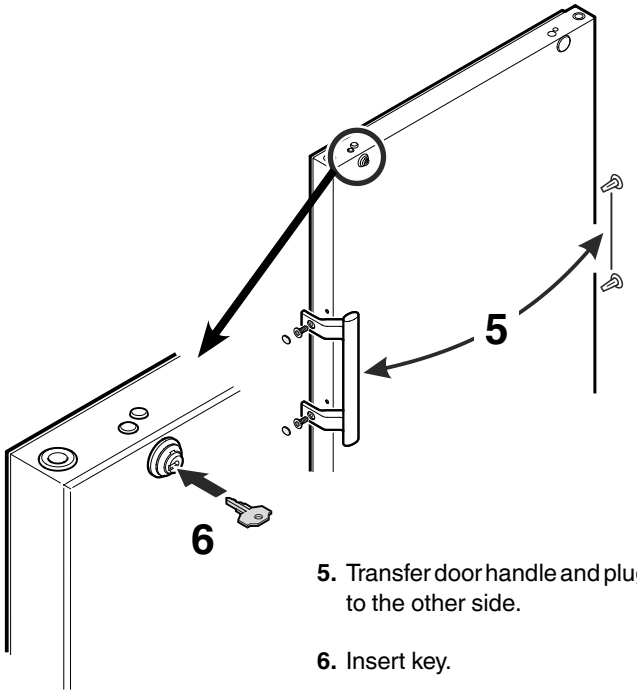

5. Transfer door handle and plugs to the other side.

6. Insert key.

7. Insert the key.

Turn the key 90°.

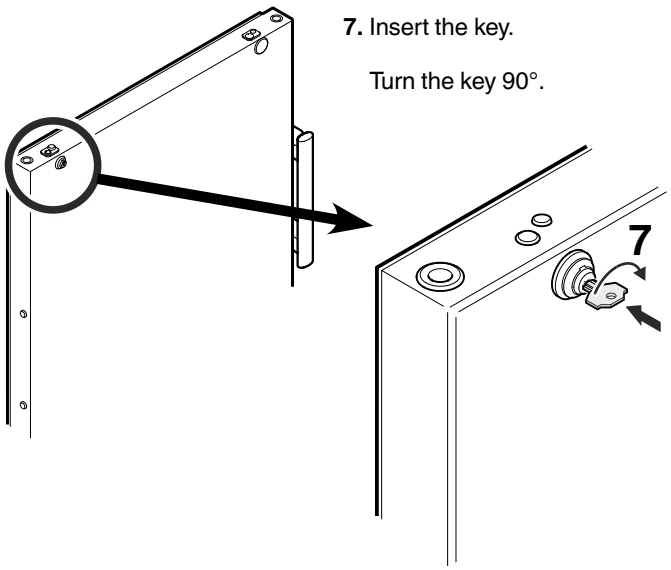

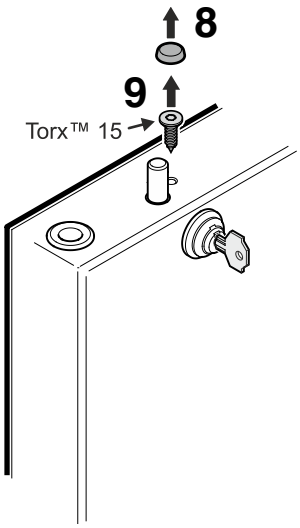

8. Remove cover.

9. Remove screw.

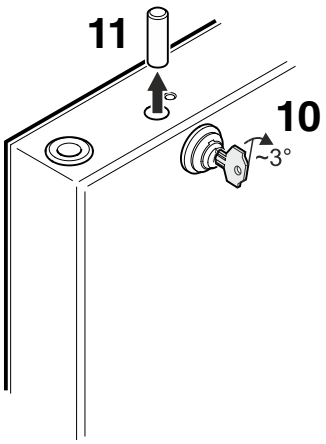

10. Turn the lock approx. 3° clockwise.

11. Remove pin.

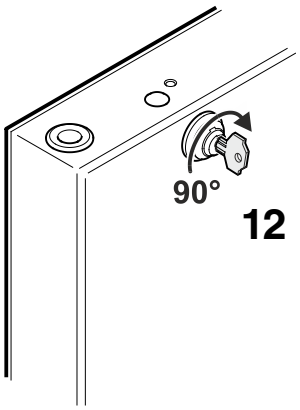

12. Turn the lock 90° clockwise.

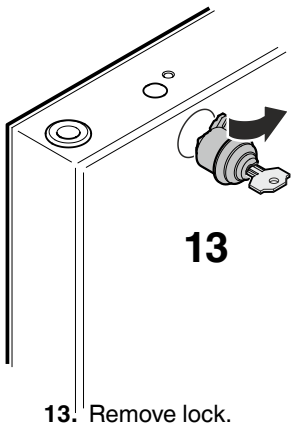

13. Remove lock.

14. Transfer covers to the opposite side.

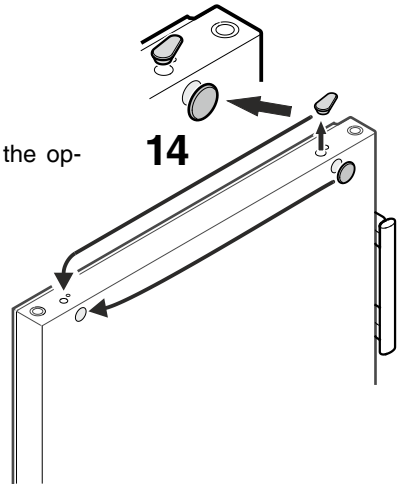

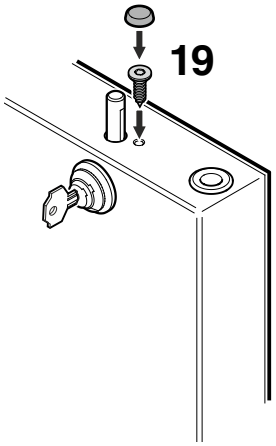

19. Screw in the screw and attach the cover cap.

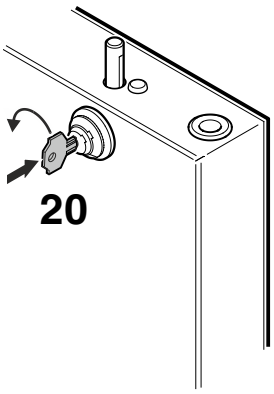

20. Insert the key.

Turn the key 90°.

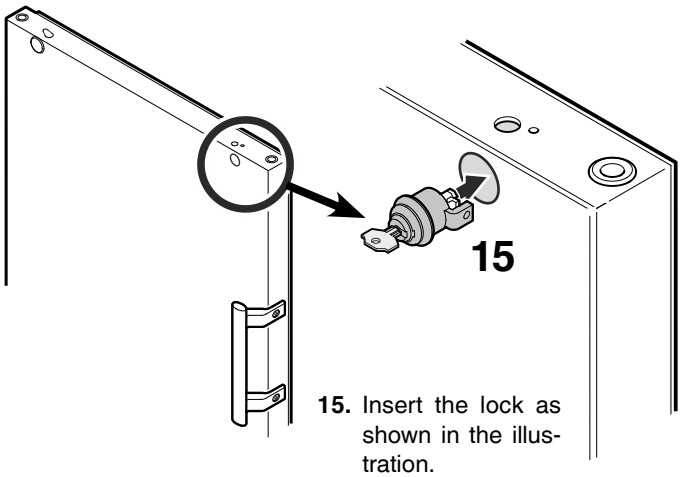

15. Insert the lock as shown in the illustration.

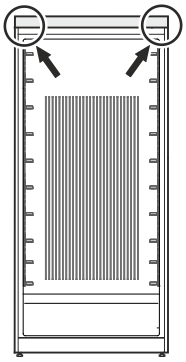

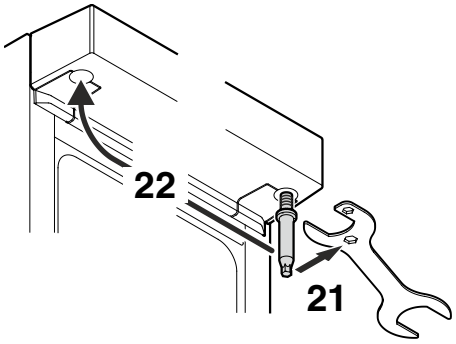

21. Unscrew the pin.
Use the spanner provided.

22. Screw in the pin on the opposite side.

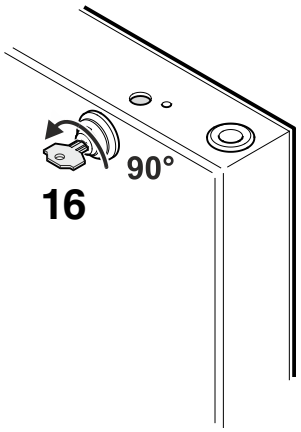

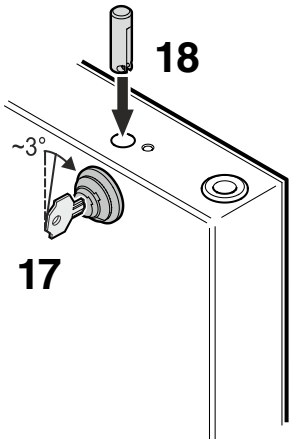

16. Turn back the lock 90° anticlockwise.

17. Turn the lock further - approx. 3° clockwise.

18. Insert pin.

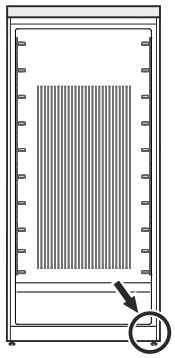

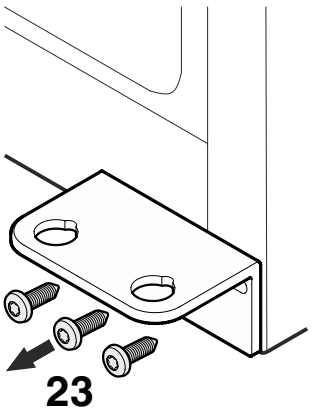

23. Unscrew hinge bracket.

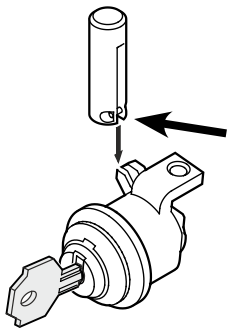

Note on point 18

After insertion, the pin's cross pin must be engaged in the groove of the catch.

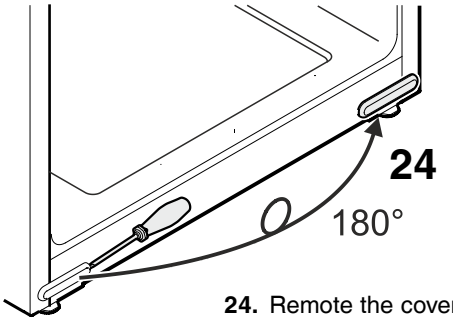

24. Remote the cover, turn it through 180° and re-fit it on the opposite side.

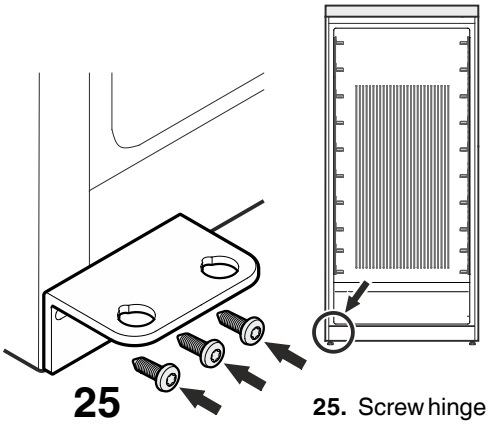

25. Screw hinge bracket into place.

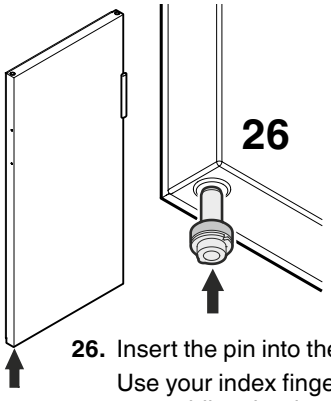

26. Insert the pin into the left-hand door mounting.
Use your index finger to hold the pin while you are assembling the door.

27. Locate the door on the upper pin as shown in the illustration and guide it to the lower hinge bracket.

Important

As a result of its heavy weight, the door must be held secure by one person.

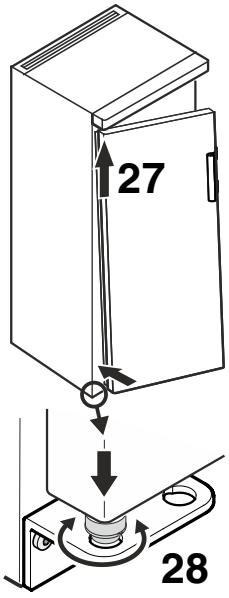

28. Lift the door upwards and turn the pin until it fits into the bore hole of the hinge bracket.

Slowly lower the door downwards. The lower part of the pin must be fully engaged in the bore hole of the hinge bracket.

29. Screw the screw into the pin again and tighten.

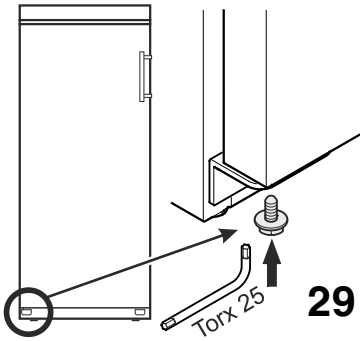

Adjusting the lateral tilt of the door

If the door is at an angle, adjust the angle.

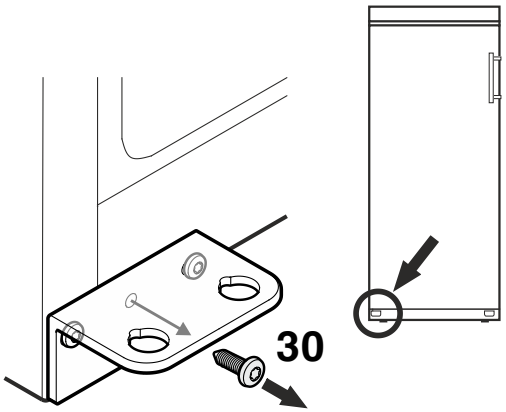

30. Remove middle screw from hinge bracket.
This screw is no longer needed.

31. Undo screws and slide hinge bracket to the right or left.
Tighten screws.

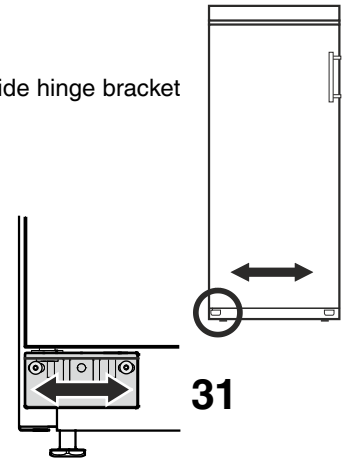

Liebherr-Hausgeräte GmbH
Memminger Straße 77-79
88416 Ochsenhausen
Germany
home.liebherr.com