Original operating instructions

Freezer

Read the operating instructions before switching on for the first time

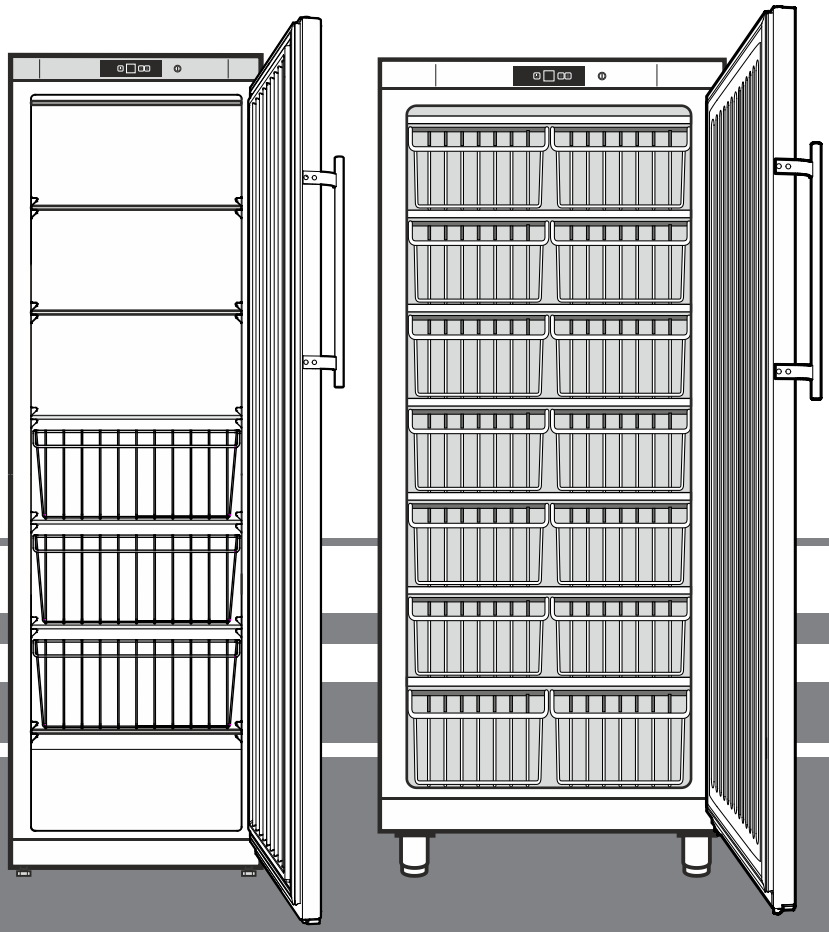

GG 4010
GG 4060
GG 5210
GG 5260

7085 375-02

LIEBHERR

Content

Priority of warnings 8
Safety instructions and warnings 8
Symbols on the appliance 9
Intended use 9
Foreseeable incorrect use 9
Declaration of conformity 9
Noise emissions from the appliance 9
Climate rating 9
Description of the appliance 9
Setting up 10
Levelling the appliance 10
Dimensions 10
Electrical connection 10
Operating and control elements 10
Switching the appliance on and off 10
Setting the temperature 11
Door open alarm 11
Temperature alarm 11
Power failure display 11
Setup mode 11
Safety lock 12
Storing 12
Defrosting 12
Cleaning 12
Malfunctions 12
Shutting your appliance down 12
Disposal notes 12
Changing over door hinges 13

Priority of warnings

⚠ **DANGER**	identifies a situation involving direct danger which, if not obviated, may result in death or severe bodily injury.
⚠ **WARNING**	identifies a dangerous situation which, if not obviated, may result in death or severe bodily injury.
⚠ **CAUTION**	identifies a dangerous situation which, if not obviated, may result in minor or medium bodily injury.
NOTICE	identifies a dangerous situation which, if not obviated, may result in damage to property.
Note	identifies useful information and tips.

Safety instructions and warnings

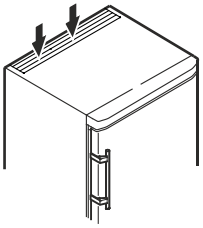

- **WARNING:** do not seal ventilation openings on the appliance housing or enclosure.
- **WARNING:** only use the mechanical devices or other aids recommended by the manufacturer to help speed up the defrosting process.
- **WARNING:** do not damage the refrigerant circuit.
- **WARNING:** do not use any electrical devices in the refrigerator compartment which do not comply with the design recommended by the manufacturer.
- **WARNING:** the mains cable must not be damaged while installing the appliance.
- **WARNING:** multi-sockets or distributor strips and other electronic devices (such as halogen transformers) must not be positioned and operated at the rear of appliances.
- **WARNING:** this appliance must be secured as described in the operating instructions to rule out any potential risks due to its instability.
- This appliance can be used by children of 8 years old and over, and also by persons with restricted physical, sensory or mental capacity or lack of experience and knowledge, if they are supervised or have been instructed on safe use of the appliance and understand the resulting risks. Children must not be allowed to play with the appliance. Cleaning and user maintenance must not be carried out by children without supervision.
- Do not store any explosive substances, such as aerosol containers with flammable propellant gas, inside the appliance.
- To prevent injury and damage to property, the appliance should only be installed by two people.
- After unpacking it, check the appliance for signs of damage. Contact the supplier if it is damaged. Do not connect the appliance to the mains power supply.
- Avoid prolonged skin contact with cold surfaces (e.g. chilled/frozen products). If necessary, take safety action (e.g. gloves).
- All repairs and work on the appliance may only be carried out by customer service personnel or other trained personnel. The same applies to changing the mains power cable.
- Only carry out repair and other work on the appliance when the mains plug has visibly been disconnected.

- Only install, connect and dispose of the appliance as described in these operating instructions.
- In the event of a fault, pull out the plug or switch off the fuse.
- When disconnecting the appliance from the mains, pull on the plug. Do not pull on the cable.
- Ensure that food which has been stored for too long is not consumed. Dispose of food which has been stored for too long properly.
- Do not allow naked flames or ignition sources to enter the appliance.

Symbols on the appliance

	The symbol can be located on the compressor. It refers to the oil in the compressor and indicates the following danger: swallowing or inhaling can be fatal. This is only relevant for recycling. There is no danger in normal operation.
	Warning about inflammable substances.
	A sticker to this effect may be applied to the rear of the appliance. It refers to the foampadded panels in the door and/or the housing. This is only relevant for recycling. Do not remove the sticker.

Intended use

The appliance is suited only for cooling food.

This appliance may be used to display food and drink in retail sales outlets. It is suitable for commercial use, for example in restaurants, canteens, hospitals and in commercial businesses such as bakeries, butchers' shops, supermarkets, etc.

This professional refrigeration appliance is designed for storing frozen food. It is **not** designed for the presentation of food or for the removal of food by customers.

The appliance is designed for use in enclosed rooms. All other types of use are not permitted.

Foreseeable incorrect use

Do not use the appliance for the following applications:

- Storage and cooling of medicines, blood plasma, laboratory preparations or similar substances and products subject to the Medical Devices Directive 2007/47/EC.
- Use in potentially explosive atmospheres.
- Use outdoors or in areas where it is exposed to splash water or damp conditions.

Incorrect use of the appliance will result in damaging or spoiling the goods stored in it.

Declaration of conformity

The refrigerant circuit has been tested for leaks. The appliance complies with the relevant safety regulations and EU Directives 2006/42/EG, 2014/30/EU, 2009/125/EG and 2011/65/EU.

Noise emissions from the appliance

The noise level while the appliance is operating is below 70 dB(A) (relative noise level 1 pW).

Climate rating

The climate rating indicates at what room temperature the appliance may be operated to achieve full cooling capacity and what the maximum humidity level in the area around the appliance may be to ensure that no condensation forms on the exterior housing.

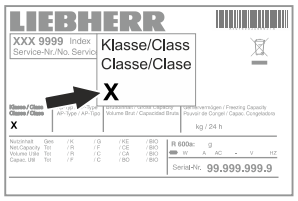

The climate rating is indicated on the type plate.

Climate rating	Max. room temperature	Max. relative humidity
3	25 °C	60%
4	30 °C	55%
5	40 °C	40%
7	35 °C	75%

The minimum room temperature at the place of installation is 10°C.

Description of the appliance

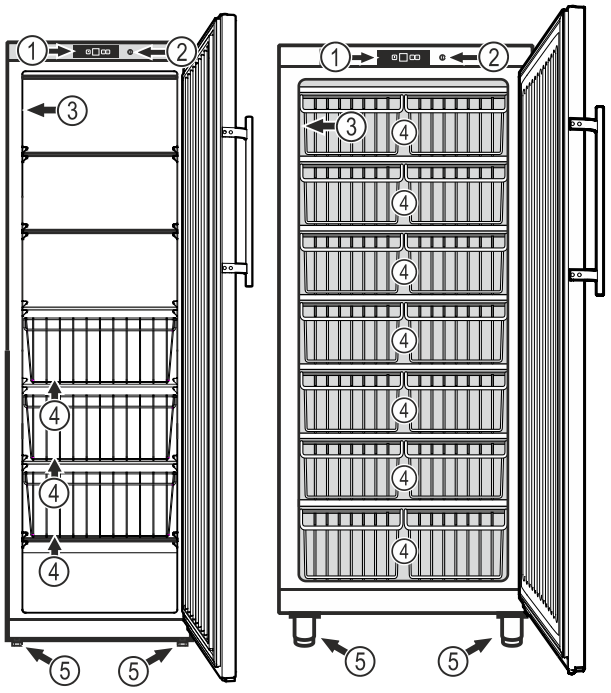

(1) Operating and control elements
(2) Lock
(3) Type plate
(4) Baskets
(5) Adjustable-height feet

NOTICE

The maximum load per basket is 30 kg.

Setting up

- Do not place the appliance in direct sunlight or near cookers, radiators and similar sources of heat.
- Do not place heat-emitting appliances, e.g. microwave oven, toaster, etc., on top of the appliance.
- The more coolant there is in the appliance, the larger the room in which the appliance is installed must be. If the room is too small, any leak may create a flammable mixture of gas and air. For each 8 g of coolant the installation space must be at least 1 m^3. Information on the coolant is on the model plate inside the appliance.
- Always install the appliance directly against the wall.
- If several appliances are installed next to each other, leave a gap of 30 mm between them. If this gap is too narrow, condensation forms between the side walls.

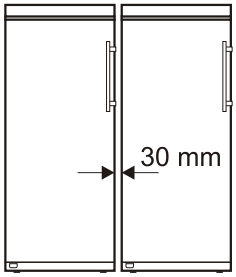

Levelling the appliance

- Place the appliance in its final position at the place of installation.
- Compensate floor unevenness using the adjustable feet.

Note

The appliance must be aligned horizontally and vertically. If the appliance is not level, the main body of the appliance can be deformed and the door will not close properly.

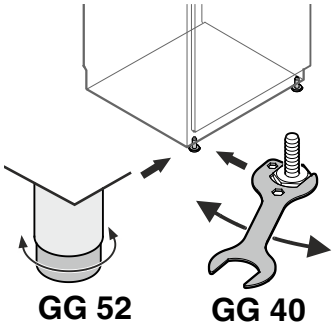

⚠ WARNING

The height of the foot can be adjusted from 150 mm to 180 mm.

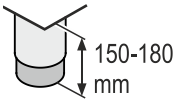

Do not set the adjustable foot to a height greater than 180 mm! The bottom section of the adjustable foot can become loose and the appliance may then tip over.

This can lead to serious or even fatal injuries.

Dimensions

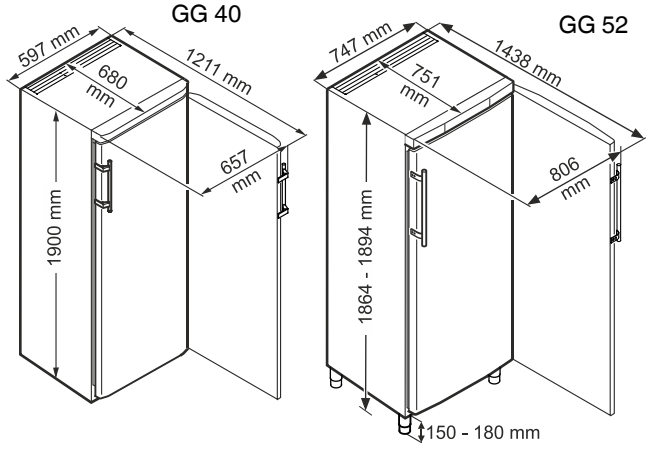

Electrical connection

Only operate the appliance with **alternating current (AC)**.

The permissible voltage and frequency are indicated on the type plate. The position of the type plate is shown in the section entitled **Description of the appliance**.

The socket must be properly earthed and protected by a fuse. The tripping current of the fuse must be between 10 A and 16 A.

The socket must not be situated behind the appliance and must be easily accessible.

Do not connect the appliance using an extension cable or extension socket.

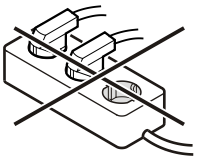

Do not use stand-alone inverters (conversion of direct current to alternating current/three-phase current) or energy-saving plugs. Risk of damage to the electronic control system!

Operating and control elements

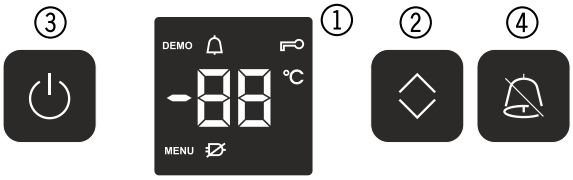

① Temperature display (display)

② Temperature button

③ On/Off button

④ Audible warning on/off button

Symbols in the display

MENU Setup mode is activated (activating the child lock and adjusting the display brightness)

Alarm (symbol flashes if the temperature inside the appliance is too high or too low)

Child lock is activated

Power failure symbol

DEMO Demo mode is activated

Switching the appliance on and off

Switching the appliance on

Press the **On/Off** button so that the temperature display lights up.

Switching the appliance off

Press the **On/Off** button for approx. three seconds so that the temperature display goes out. In addition, an audible warning signal will sound.

Setting the temperature

Press the **Up/Down** button. The temperature display flashes.





Press the **Up/Down** button, the next lower temperature value in the temperature display will light up.

Keep pressing the **Up/Down** button until the desired value is displayed.

The electronic controls will switch over automatically about 5 seconds after the last time you pressed the button, and the actual temperature will be displayed.

The temperature can be set at between -14°C and -28°C.

Note

The temperature in the warmest area of the interior may be higher than the temperature setting.

If the door is left open for a lengthy period, the temperature in the appliance's compartments may rise dramatically.

Door open alarm

If the door is left open for more than 180 seconds, the audible warning signal will sound.

If the door must be opened for a lengthy period to place items into the appliance, cancel the audible warning signal by pressing the **Alarm** button.



The alarm switches back to standby when the door is shut.

Temperature alarm

If the temperatures in the interior are out of the permitted range, the audible warning signal will sound and the temperature display will flash.

After a lengthy power failure, the temperature in the interior may have risen to too high a level. After the power supply returns, the fall in temperature can be watched on the display.

- Cancel the audible warning signal by pressing the **Alarm** button.

The temperature display will stop flashing as soon as the temperature in the interior has reached the set value.

Temperature alarm after a fault in the appliance

If the appliance develops a fault, the temperature in the interior may rise too high or fall too low. The audible warning signal will sound and the temperature display will flash.

If the temperature displayed is too high (warm), first check whether the door is closed correctly. If the temperature display continues to show a value that is too high or too low after one hour, contact the customer service department.

- Cancel the audible warning signal by pressing the **Alarm** button.

Power failure display

If  appears in the display, the freezer temperature has risen too high due to a power failure.





- Press the **Alarm** button.

The highest temperature during the power failure will be displayed. Check the quality of the food depending on the temperature displayed.

Do not eat perished food!
Do not refreeze thawed food!

Press the **Alarm** button again to cancel the display.

Setup mode

In setup mode you can set the child lock and adjust the brightness of the display. The child lock is designed to protect the appliance from being switched off accidentally.

Activating the child lock

Press  for 5 seconds. Display =

Press  Display =

Press  Display =

Exit setup mode by pressing the  button.

Deactivating the child lock

Press  for 5 seconds. Display = 

Press  Display =

Press  Display =

Exit setup mode by pressing the  button.

Adjusting the display brightness

Press  for 5 seconds. Display =

Press  Display =

Press  Display =

Press  Adjust to the desired brightness using the **Up/Down** button.

h1 = minimum brightness
h5 = maximum brightness

Press  Display =

Exit setup mode by pressing the **On/Off** button.

The adjusted brightness will be activated after one minute.

If a button is pressed, the display lights up for one minute at maximum brightness.

When commissioning the appliance, the adjusted brightness will only be active once the set interior temperature of the appliance has been reached.

Safety lock

The lock is equipped with a safety mechanism.

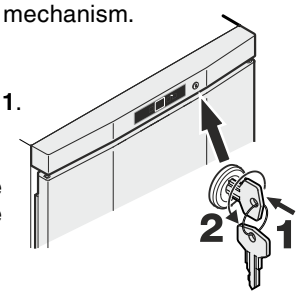

Locking the appliance

- Insert the key as shown by arrow **1**.
- Turn the key 180°.

To unlock the appliance, the same procedure must be repeated in the same order.

Storing

NOTICE

Store raw meat or fish in clean sealed containers on the bottom shelf of the refrigerator/freezer compartment so that it cannot come into contact with any other food or drip liquid onto it.

A failure to follow these instructions may result in the food being spoilt.

Defrosting

After a longer period of operation a layer of frost or ice can build up on the cooling plates in the freezer compartment. This will increase the energy consumption of the freezer. The cooling plates should therefore be defrosted regularly.

- Switch the appliance off to defrost. **Remove the plug.**
- Transfer items to other appliances.
- Leave the door of the appliance open while defrosting.
- After a defrosting time of approx. 20 minutes, the layer of frost or ice can be detached by hand and removed.
- Mop up the remaining water with a cloth and clean the appliance.

Cleaning

⚠ WARNING

Before cleaning, always disconnect the appliance from the mains. Pull out the plug or switch off the fuse.

Surfaces which may come into contact with food and accessible drain systems must be cleaned at regular intervals.

⚠ CAUTION

Risk of damage to the appliance components and risk of injury due to hot steam.

Do not use steam cleaning equipment to clean the appliance.

- Clean the inside, equipment parts and outer walls with lukewarm water and a little detergent. Do not use chemical solvents or any cleaning agents containing sand or acid.
- To avoid short-circuits, ensure no cleaning water penetrates into the electrical components when cleaning the appliance.
- Dry all parts well with a cloth.
- Do not damage or remove the type plate on the inside of the appliance. It is very important for servicing purposes.

Malfunctions

- **C6 or F3 appears in the display.**

– The appliance has suffered a fault. Contact the customer service department.

You may be able to rectify the following faults by checking the possible causes yourself:

- **Appliance does not function:**

– Is the appliance switched on?
– Is the plug correctly fitted in the mains socket?
– Is the fuse intact?

- **When inserting the mains plug, the refrigeration unit does not switch on, but a value is shown in the temperature display.**

– Demo mode is activated.
Contact the customer service department.

- **The temperature is not low enough:**

– Is the temperature setting correct (see "Setting the temperature")?
– Does the separately installed thermometer show the correct reading?
– Is the ventilation system working properly?
– Is the appliance set up too close to a heat source?

If none of the above causes apply and you cannot rectify the fault yourself, contact the nearest customer service department stating the type designation ①, service number ② and appliance number ③ as indicated on the type plate.

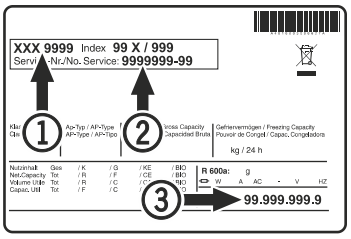

The position of the type plate is shown in the section entitled **Description of the appliance**.

Shutting your appliance down

If the appliance is left empty for a lengthy period, it must be switched off, defrosted, cleaned and dried and the door is to be left open to prevent mould formation.

Disposal notes



The appliance contains reusable materials and should be disposed of properly - not simply with unsorted household refuse. Appliances which are no longer needed must be disposed of in a professional and appropriate way, in accordance with the current local regulations and laws.

Do not damage the refrigerant circuit of an appliance that is no longer needed during its disposal.

This appliance contains inflammable gases in the refrigerant circuit and insulation foam.

Your local council or a waste disposal contractor can provide information about how to dispose of the appliance correctly.

Changing over door hinges

1. Remove screw from lower hinge bracket.

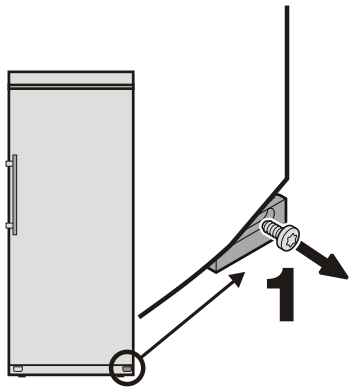

2. Lift door, tilt to the right and remove.

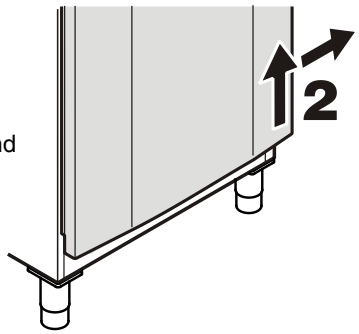

3. Transfer upper hinge components to the opposite side.

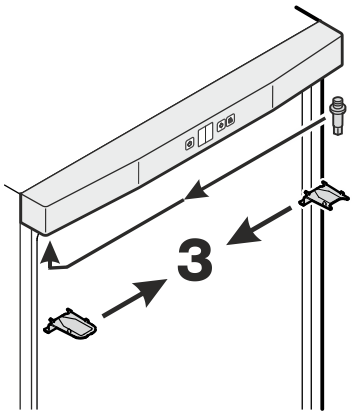

4. Transfer lower hinge bracket and cover plate to the opposite side.

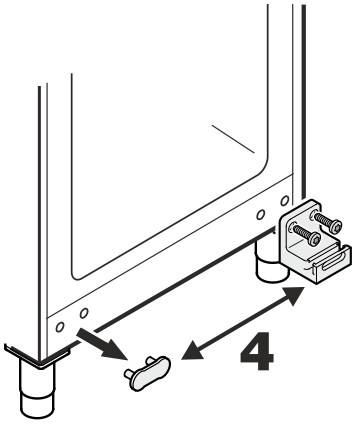

5. Turn lower hinge pin through 180° and remove.

6. Insert pin on the opposite side and turn through 180°.

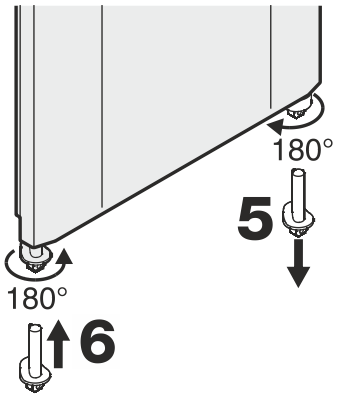

7. Locate door on upper pin.

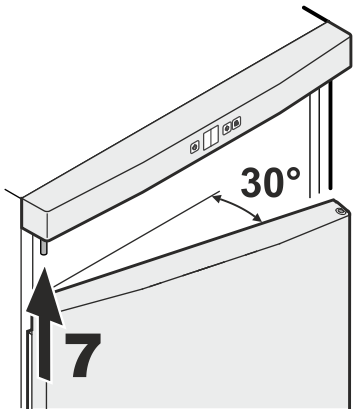

8. Tilt door inwards from the left.

9. Secure hinge pin with screw.

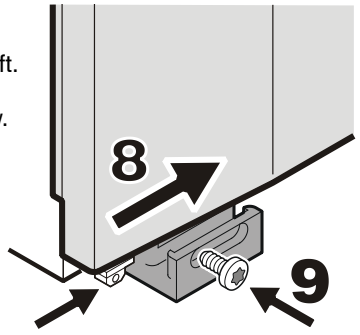

10. Transfer handle and plugs to the opposite side of the door.

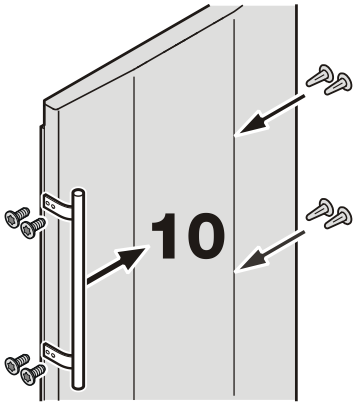

Liebherr-Hausgeräte GmbH
Memminger Straße 77-79
88416 Ochsenhausen
Germany
home.liebherr.com