Original operating instructions

Commercial refrigerator

Read the operating instructions before switching on for the first time

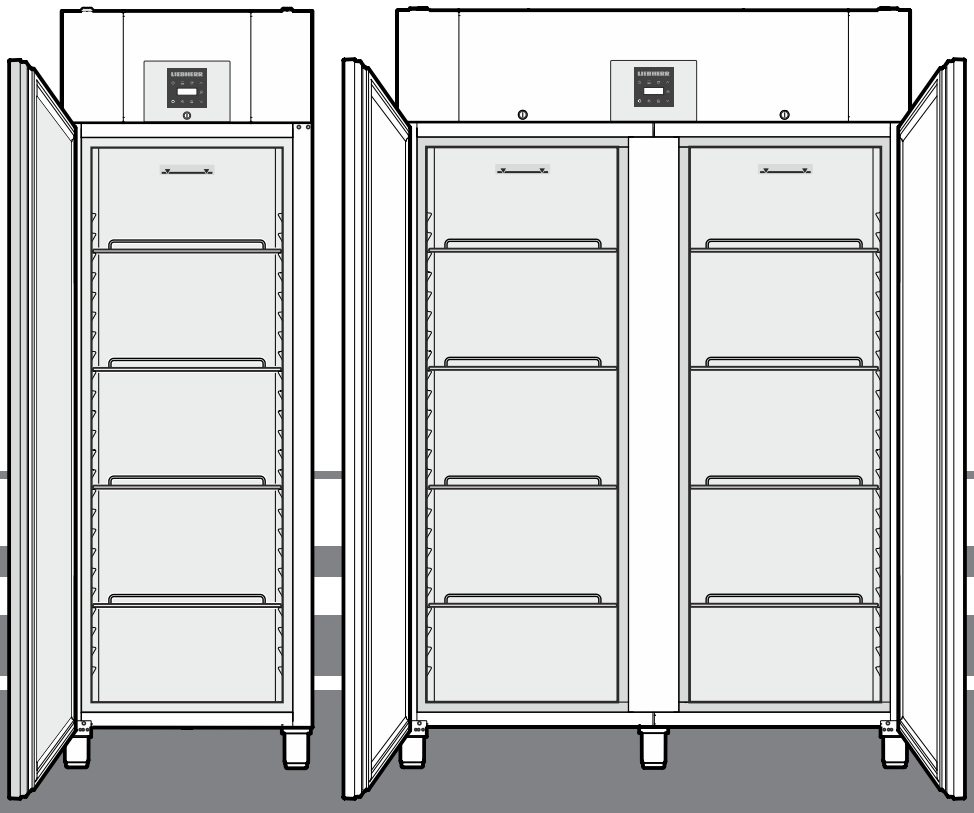

GKPv 6520
GKPv 6570
GKPv 6573
GKPv 1470

7085 423-03

LIEBHERR

Content

Priority of warnings 12
Safety instructions and warnings 12
Symbols on the appliance 13
Intended use 13
Foreseeable incorrect use 13
Declaration of conformity 13
Noise emissions from the appliance 13
Climate rating 13
Description of the appliance 14
Setting up 14
Levelling the appliance 14
Electrical connection 14
Appliance dimensions 15
Equipment 15
Operating and control elements 16
Switching the appliance on and off 16
Setting the temperature 16
Temperatur display mode 16
Humidity function 16
SuperCool 16
Door open alarm 16
Setting the delay time for the door open alarm 17
Deactivating the audible warning signal function 17
Alarm test 17
Alarm messages 17
Adjusting the alarm parameters 17
Reading the temperature progression 18
Resetting the alarm events 18
Resetting the recorded temperature progression rt 18
Resetting the parameters to factory settings 18
Storing 18
Defrosting 18
Activating the defrost function manually 18
Setting the display indication for the defrost phase 18
Cleaning 19
Shutting your appliance down 19
Malfunctions 19
Possible error messages in the display 19
Disposal notes 19
Changing over door hinges GKPv 65.. 20

Priority of warnings

⚠ **DANGER**	identifies a situation involving direct danger which, if not obviated, may result in death or severe bodily injury.
⚠ **WARNING**	identifies a dangerous situation which, if not obviated, may result in death or severe bodily injury.
⚠ **CAUTION**	identifies a dangerous situation which, if not obviated, may result in minor or medium bodily injury.
NOTICE	identifies a dangerous situation which, if not obviated, may result in damage to property.
Note	identifies useful information and tips.

Safety instructions and warnings

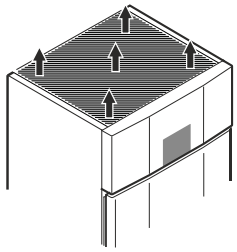

- **WARNING:** do not seal ventilation openings on the appliance housing or enclosure. ⟶
- **WARNING:** only use the mechanical devices or other aids recommended by the manufacturer to help speed up the defrosting process.
- **WARNING:** do not damage the refrigerant circuit.
- **WARNING:** do not use any electrical devices in the refrigerator compartment which do not comply with the design recommended by the manufacturer.
- **WARNING:** the mains cable must not be damaged while installing the appliance.
- **WARNING:** multi-sockets or distributor strips and other electronic devices (such as halogen transformers) must not be positioned and operated at the rear of appliances.
- **WARNING:** danger of injury through electric shock. There are live parts under the cover. Only have the interior LED light replaced or repaired by customer service staff or trained personnel.
- **WARNING:** risk of injury from the LED lamp. The light intensity of the LED light complies with laser class RG 2. If the cover is defective, do not look directly at the light through optical lenses from close distance. This may damage your eyes.
- **WARNING:** this appliance must be secured as described in the operating instructions to rule out any potential risks due to its instability.
- This appliance can be used by children of 8 years old and over, and also by persons with restricted physical, sensory or mental capacity or lack of experience and knowledge, if they are supervised or have been instructed on safe use of the appliance and understand the resulting risks. Children must not be allowed to play with the appliance. Cleaning and user maintenance must not be carried out by children without supervision.
- Do not store any explosive substances, such as aerosol containers with flammable propellant gas, inside the appliance.
- To prevent injury and damage to property, the appliance should only be installed by two people.
- After unpacking it, check the appliance for signs of damage. Contact the supplier if it is damaged. Do not connect the appliance to the mains power supply.

- Avoid prolonged skin contact with cold surfaces (e.g. chilled/frozen products). If necessary, take safety action (e.g. gloves).
- All repairs and work on the appliance may only be carried out by customer service personnel or other trained personnel. The same applies to changing the mains power cable.
- Only carry out repair and other work on the appliance when the mains plug has visibly been disconnected.
- Only install, connect and dispose of the appliance as described in these operating instructions.
- In the event of a fault, pull out the plug or switch off the fuse.
- When disconnecting the appliance from the mains, pull on the plug. Do not pull on the cable.
- Ensure that food which has been stored for too long is not consumed. Dispose of food which has been stored for too long properly.
- Do not use the interior LED light to light the room. The interior LED light is only designed to illuminate the interior of the appliance.
- Do not allow naked flames or ignition sources to enter the appliance.
- Alcoholic drinks or other vessels containing alcohol should be sealed tightly for storage.

Symbols on the appliance

	The symbol can be located on the compressor. It refers to the oil in the compressor and indicates the following danger: swallowing or inhaling can be fatal. This is only relevant for recycling. There is no danger in normal operation.
	Warning about inflammable substances.
	A sticker to this effect may be applied to the rear of the appliance. It refers to the foampadded panels in the door and/or the housing. This is only relevant for recycling. Do not remove the sticker.

Intended use

The appliance is suited only for cooling food.

This appliance may be used to display food and drink in retail sales outlets. It is suitable for commercial use, for example in restaurants, canteens, hospitals and in commercial businesses such as bakeries, butchers' shops, supermarkets, etc.

This professional refrigeration appliance is designed for storing chilled food. It is **not** designed for the presentation of food or for the removal of food by customers.

The appliance is designed for use in enclosed rooms. All other types of use are not permitted.

Foreseeable incorrect use

Do not use the appliance for the following applications:

- Storage and cooling of medicines, blood plasma, laboratory preparations or similar substances and products subject to the Medical Devices Directive 2007/47/EC.
- Use in potentially explosive atmospheres.
- Use outdoors or in areas where it is exposed to splash water or damp conditions.

Incorrect use of the appliance will result in damaging or spoiling the goods stored in it.

Declaration of conformity

The refrigerant circuit has been tested for leaks. The appliance complies with the relevant safety regulations and EU Directives 2006/42/EG, 2014/30/EU, 2009/125/EG and 2011/65/EU.

Noise emissions from the appliance

The noise level while the appliance is operating is below 70 dB(A) (relative noise level 1 pW).

Climate rating

The climate rating indicates at what room temperature the appliance may be operated to achieve full cooling capacity and what the maximum humidity level in the area around the appliance may be to ensure that no condensation forms on the exterior housing.

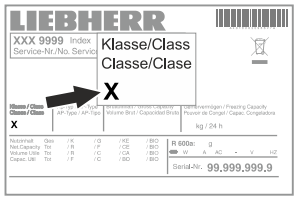

The climate rating is indicated on the type plate.

Climate rating	Max. room temperature	Max. relative humidity
3	25 °C	60%
4	30 °C	55%
5	40 °C	40%
7	35 °C	75%

The minimum room temperature at the place of installation is 10°C.

Description of the appliance

GKPv 1470

GKPv 6520
GKPv 6570
GKPv 6573

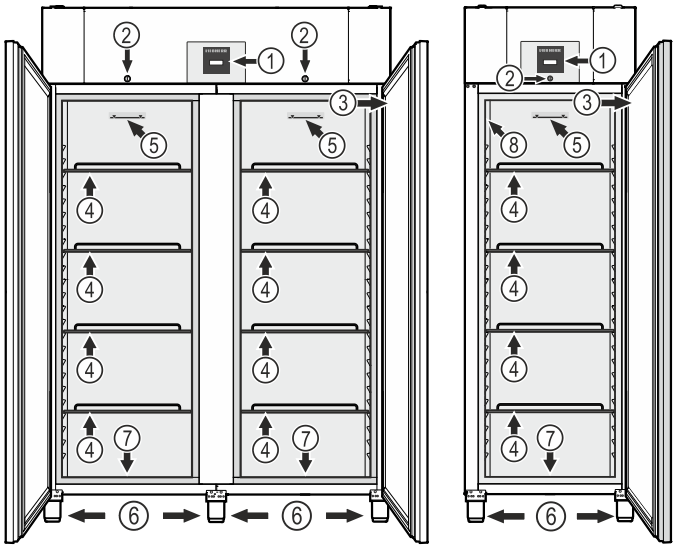

(1) Operating and control elements
(2) Lock
(3) Type plate GKPv 6520, GKPv 6570
(4) Grid shelves
(5) Stacking mark
(6) Stellfüße
(7) Adjustable-height feet
(8) Type plate GKPv 6573

NOTICE

The maximum load per grid shelf is 60 kg.

Cleaning water drain opening

A drain hose with an R 3/4 connection can be fitted to the underside of the appliance.

The water which collects in the interior during cleaning can be drained off in this way.

An angled connector is supplied with the appliance.

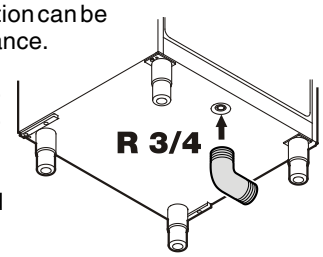

Setting up

- Do not place the appliance in direct sunlight or near cookers, radiators and similar sources of heat.
- Do not place heat-emitting appliances, e.g. microwave oven, toaster, etc., on top of the appliance.
- The more coolant there is in the appliance, the larger the room in which the appliance is installed must be. If the room is too small, any leak may create a flammable mixture of gas and air. For each 8 g of coolant the installation space must be at least 1 m^3. Information on the coolant is on the model plate inside the appliance.
- There must be a gap of at least 30 cm between the upper edge of the appliance and the ceiling.

Levelling the appliance

Compensate floor unevenness using the adjustable feet.

To alter the height, rotate the bottom section of the respective adjustable foot.

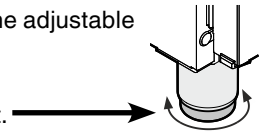

⚠ WARNING

The height of the foot can be adjusted from 120 mm to 170 mm.

Do not set the adjustable foot to a height greater than 170 mm! The bottom section of the adjustable foot can become loose and the appliance may then tip over.

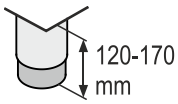

This can lead to serious or even fatal injuries.

NOTICE

The appliance must be aligned horizontally and vertically. If the appliance is not level, the main body of the appliance can be deformed and the door will not close properly.

Electrical connection

Only operate the appliance with **alternating current (AC)**.

The permissible voltage and frequency are indicated on the type plate. The position of the type plate is shown in the section entitled **Description of the appliance**.

The socket must be properly earthed and protected by a fuse. The tripping current of the fuse must be between 10 A and 16 A.

The socket must not be situated behind the appliance and must be easily accessible.

Do not connect the appliance using an extension cable or extension socket.

Do not use stand-alone inverters (conversion of direct current to alternating current/three-phase current) or energy-saving plugs. Risk of damage to the electronic control system!

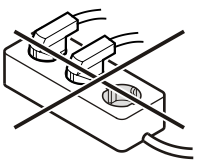

Appliance dimensions

GKPv 6520
GKPv 6570

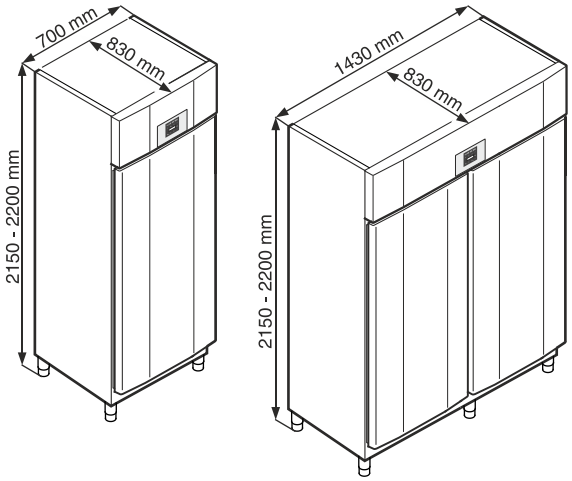

Equipment

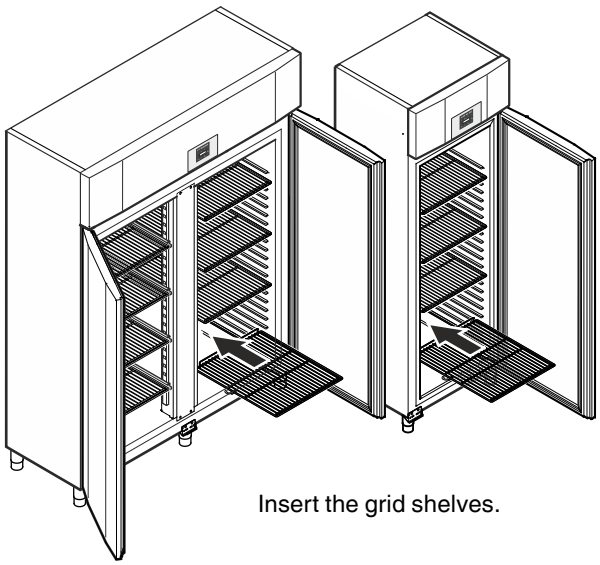

Insert the grid shelves.

Safety lock

The lock is equipped with a safety mechanism.

Locking the appliance

- Insert the key as shown by arrow **1**.
- Turn the key 180° (**2**).

To unlock the appliance, the same procedure must be repeated in the same order.

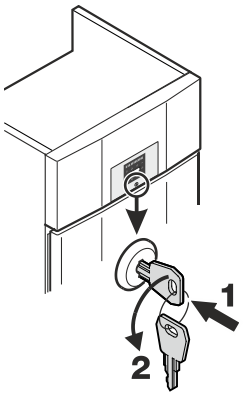

GKPv 1470 equipment

Fit the supplied shelf rails to the right and left of the vertical bar.

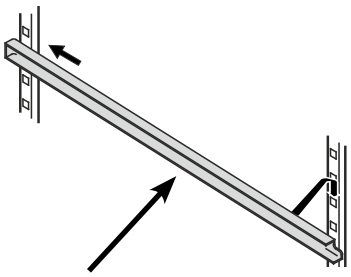

Suspend the rails at the desired height, by inserting into the rear clip-in strip first and then clipping in at the front.

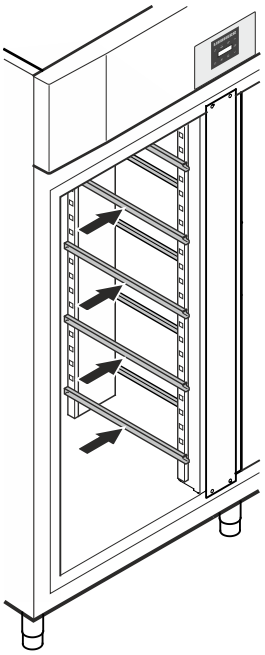

Intermediate shelves

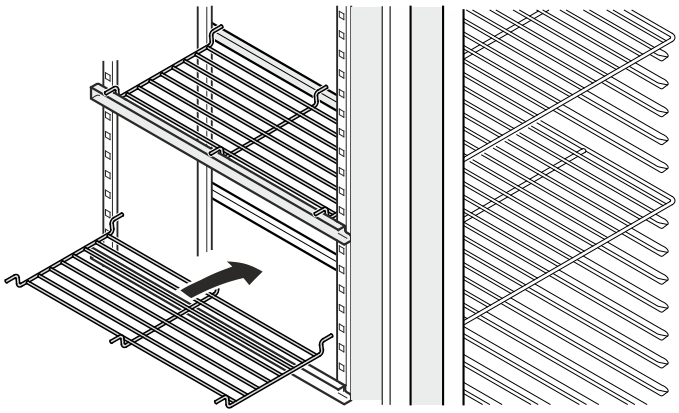

Place the supplied intermediate shelves onto the shelf rails.

NOTICE

The maximum load per intermediate shelf is 20 kg.

Interior light GKPv 6573

The interior light is fitted on the inside at the top.

It can be switched on and off by pressing the switch **S**.

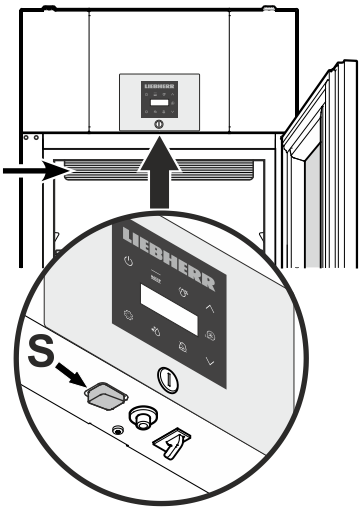

Operating and control elements



- On/Off button (switching the appliance on and off)
- HACCP Reading the temperature progression
- Humidity function
- Selection buttons
- SuperCool button
- Audible alarm Off button
- Defrost button (for manually activating the defrost function)
- Enter button

Symbols in the display

- Compressor is running
- LED flashing - refrigeration unit switches on after a delay. The compressor will start automatically after the pressure in the refrigerant circuit has equalised.
- Fan is running
- Appliance is defrosting
- The display means that the power supply and interior temperature of the appliance are recorded.
- If flashes in the display, there has either been a power failure or the temperature in the appliance exceeded the permissible range.
- SuperCool is activated
- Alarm function
- The appliance has suffered a fault. Contact the customer service department.

Switching the appliance on and off

Connect the appliance to the mains. Display = **OFF**

Switching the appliance on

Press for approx. 3 seconds. Display = **ON**

Switching the appliance off

Press for approx. 3 seconds. Display = **OFF**

Setting the temperature

Press for 1 second. The temperature display flashes.

To increase the temperature (warmer): press button .

To reduce the temperature (colder): press button .

Press again. The desired temperature setting is saved.

Note

The temperature in the warmest area of the interior may be higher than the temperature setting. If the door is left open for a lengthy period, the temperature in the appliance's compartments may rise dramatically.

Temperatur display mode

The temperature display can be switched between degrees Celsius and degrees Fahrenheit. Factory setting is degrees Celsius.

Press for 5 seconds. Display = °C

Press . Display = 0

Use button or to select the desired setting.

0 = °C 1 = °F

Press . Display = °C

Press for 5 seconds. The electronic control system will switch back to normal operating mode.

Humidity function

Certain foods must be stored in a humid atmosphere (e.g. baked goods). To prevent such foods from drying out, the humidity function must be activated.

Press for 2 seconds. Display = rH-

Use buttons to select the desired humidity setting.

rH- = high rH = medium rH_ = low

Press . The electronic control system will switch back to normal operating mode.

SuperCool

Use SuperCool, to rapidly cool large amounts of food. When SuperCool is activated, the appliance operates with maximum cooling performance.

Activating SuperCool

Press for approx. 3 seconds. Display = ccb

Place the fresh food in the appliance.

The electronic control system will automatically switch back to normal operating mode.

Prematurely deactivating SuperCool

Press for approx. 3 seconds. Display = cc E

Door open alarm

When the door is opened, the LED lights up and the temperature display begins to flash.

When the door has been left open for more than 240 seconds, the LED begins to flash, and door and the temperature indication flash alternately in the display.

The audible warning signal sounds (unless the audible warning signal function has been deactivated).

If the door has to stay open for longer in order to insert items to be cooled, cancel the audible warning signal by pressing button .

Setting the delay time for the door open alarm

The time before the audible warning signal sounds after the door has been opened can be adjusted.

Press for 5 seconds. Display = r5

Press until dAd appears in the display.

Press . Display = 1 Setting range = 1-5 minutes.

Use button or to select the desired setting.

Press . Display = dAd

Press for 5 seconds. The electronic control system will switch back to normal operating mode.

Deactivating the audible warning signal function

The audible warning signal function can be completely deactivated if necessary.

Press for 5 seconds. Display = r5

Press until HY appears in the display.

Press . Display = 0

Use button or to select the desired setting.

0 = activated 1 = deactivated

Press . Display = HY

Press for 5 seconds. The electronic control system will switch back to normal operating mode.

Alarm test

This test checks the function of the internal and any external connected alarm device. The appliance does not stop its refrigerating function during this test.

Press + for 5 seconds.

- The display will change to a temperature value of 0.2°C below the set upper alarm limit.
- The temperature value will now rise by 0.1°C every 2 seconds.
- When the upper alarm limit is reached, **HIO** will appear in the display. An external alarm unit connected to the floating alarm output will now be activated.
- The temperature value will continue to rise up to 0.2°C above the upper alarm limit.
- The same process will take place automatically for the lower alarm limit. **LIO** will appear in the display.

The LED will be lit during the test.

The electronic control system will automatically switch back to normal operating mode.

Cancelling the test prematurely

Press for 5 seconds.

Note

If the values of the upper and lower alarm limit (**AL** and **AH** in the section entitled "**Adjusting the alarm parameters**") are set to **0**, **H--** and **L--** will appear in the display during this test.

Alarm messages

1. LED flashes in the display

If appears in the display, the appliance has a fault. Consult your nearest customer service point.

2. LED flashes in the display; the display reads HI or LO

The interior is too warm (HI) or too cold (LO).

The audible warning signal sounds (unless the audible warning signal function has been deactivated).

Note

The alarm parameters can be adjusted. See **Adjusting the alarm parameters**.

3. HA / flashes in the display

The interior was too warm or too cold (**HA**) during a certain period of time.

Adjusting the alarm parameters

The alarm limits (difference to the set temperature) and the alarm delay (delay until alarm sounds) can be adjusted.

Press for 5 seconds. Display = r5

Press until AL appears in the display.

AL = Lower alarm limit

Press . Display = temperature difference in °C

Use button or to select the desired setting.

Set positive values only.

Press . Display = AL

Press . Display = AH Upper alarm limit

Press . Display = temperature difference in °C

Use button or to select the desired setting.

Set positive values only.

Press . Display = AH

Press . Display = Ad

Press . Display = alarm delay in minutes

Use button or to select the desired setting.

Press . Display = Ad

Press for 5 seconds.

The electronic control system will switch back to normal operating mode.

Reading the temperature progression

Press HACCP. Display = rt

Scroll through the list using ∨ or ∧.

rt Period in hours in which the maximum and minimum interior temperatures were measured

rH Maximum (highest) measured temperature

rL Lowest measured temperature

Select the required item using the ⚙ button. Press this button again to return to the list.

You can exit the menu at any time by pressing 🔔 for 5 seconds.

If no button is pressed within 60 seconds, the electronic control system switches back automatically.

Resetting the alarm events

Press HACCP. Display = rt

Press HACCP + ∧ for 5 seconds. Display = rES.

Press 🔔 for 5 seconds. The electronic control system will switch back to normal operating mode.

Resetting the recorded temperature progression rt

Press HACCP. Display = rt

Press ⚙. Display = 0 - 999

Press ∨ for 5 seconds. Display = rES.

The values for rH and rL (highest and lowest measured interior temperature) are then reset to the current interior temperature.

Press 🔔 for 5 seconds. The electronic control system will switch back to normal operating mode.

Resetting the parameters to factory settings

The alarm limits and sensor calibration values can be reset to the factory settings using this function.

Pull out the mains plug.

Keep 🔔 pressed and connect the mains plug.

Display = bnI

Press ⚙. Display = Std

The electronic control system will switch back to normal operating mode.

Storing

The grid shelves can be moved to accommodate different height bottles or packages.

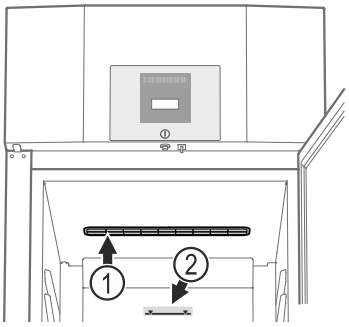

(1) The ventilation slots on the inside must not be covered!

(2) Stacking mark
Only load the top shelf up to the stacking mark. This is important so as to ensure that the air can circulate properly and the temperature is even throughout the interior.

NOTICE

Store raw meat or fish in clean sealed containers on the bottom shelf of the refrigerator/freezer compartment so that it cannot come into contact with any other food or drip liquid onto it.

A failure to follow these instructions may result in the food being spoilt.

Defrosting

The refrigerator compartment defrosts automatically.

Activating the defrost function manually

If the door has been left slightly open for a long time, a layer of ice may form in the interior and on the cooling plate. The defrost function can then be activated manually.

Press ❄ for 3 seconds. Display = ❄ + dFb

The electronic control system will automatically switch back to normal operating mode.

Display = dFE

Setting the display indication for the defrost phase

Press 🔔 for 5 seconds. Display = r'S

Press ∧ until dS appears in the display.

Press ⚙. Display = 1

Use button ∨ or ∧ to select the desired setting.

0 = Symbol ❄ + alternating display of dEF and the current temperature in the interior of the appliance.

1 = Symbol ❄ + temperature before the start of the defrost phase.

2 = Symbol ❄ + dEF.

Press ⚙. Display = dS

Press 🔔 for 5 seconds. The electronic control system will switch back to normal operating mode.

Cleaning

⚠ WARNING

Before cleaning, always disconnect the appliance from the mains. Pull out the plug or switch off the fuse.

Surfaces which may come into contact with food and accessible drain systems must be cleaned at regular intervals.

⚠ CAUTION

Risk of damage to the appliance components and risk of injury due to hot steam.

Do not use steam cleaning equipment to clean the appliance.

- Clean the inside, equipment parts and outer walls with lukewarm water and a little detergent. Do not use chemical solvents or any cleaning agents containing sand or acid.
- To avoid short-circuits, ensure no cleaning water penetrates into the electrical components when cleaning the appliance.
- Dry all parts well with a cloth.
- Use a commercially available stainless-steel cleaning agent for stainless-steel appliances.
- Do not damage or remove the type plate on the inside of the appliance. It is very important for servicing purposes.

Cleaning the dust filter

Clean the dust filter at least twice per year!

Remove the plug!

1. Remove the dust filter by lifting upwards.
2. Clean the dust filter with water and detergent.
3. Reinstall the dust filter.

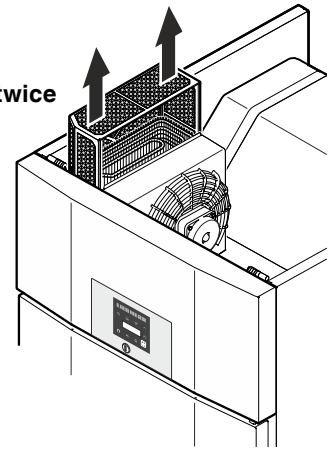

Disposal notes

The appliance contains reusable materials and should be disposed of properly - not simply with unsorted household refuse. Appliances which are no longer needed must be disposed of in a professional and appropriate way, in accordance with the current local regulations and laws.



Do not damage the refrigerant circuit of an appliance that is no longer needed during its disposal.

This appliance contains inflammable gases in the refrigerant circuit and insulation foam.

Your local council or a waste disposal contractor can provide information about how to dispose of the appliance correctly.

Malfunctions

You may be able to rectify the following faults by checking the possible causes yourself:

- **Appliance does not function:**

– Is the appliance switched on?
– Is the plug correctly fitted in the mains socket?
– Is the fuse intact?

- **The temperature is not low enough:**

– Is the temperature setting correct (see "Setting the temperature")?
– Does the separately installed thermometer show the correct reading?
– Is the ventilation system working properly?
– Is the appliance set up too close to a heat source?

If none of the above causes apply and you cannot rectify the fault yourself, contact the nearest customer service department stating the type designation ①, service number ② and appliance number ③ as indicated on the type plate.

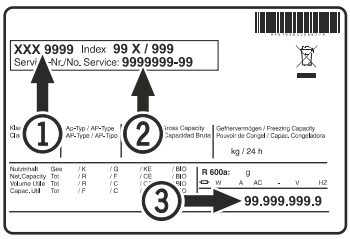

The position of the type plate is shown in the section entitled **Description of the appliance**.

Possible error messages in the display

Error code	Error	Action
E0, E1, E2, rE	Temperature sensor defective	Contact the customer service department
EE, EF	Electronic control system error	Contact the customer service department
dOr	Appliance door open for too long	Close appliance door
HI	Temperature inside appliance too high (too warm)	Check that the door has been closed properly. If the temperature does not drop, contact the customer service department.
LO	Temperature inside appliance too low (too cold)	Contact the customer service department
HA	The interior was too warm or too cold during a certain period of time.	See **Reading the temperature progression**

Shutting your appliance down

If the appliance is left empty for a lengthy period, it must be switched off, defrosted, cleaned and dried and the door is to be left open to prevent mould formation.

Changing over door hinges GKPv 65..

Door hinges should only be changed by a trained expert.

Changing the door hinges must be done by two people.

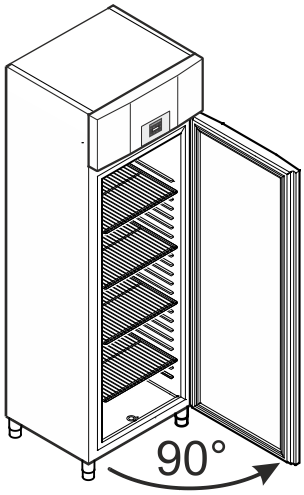

1. Open door by about 90°.

Important note

The door must be opened 90° before the lower hinge bracket is removed.

This will hold the self-closing mechanism that is integrated into the door in the required position for installation.

⚠ WARNING!

If the door is removed and reinstalled in the closed position, this will lead to destruction of the self-closing mechanism on the first opening of the door.

Important

As a result of its heavy weight, the door must be held secure by one person.

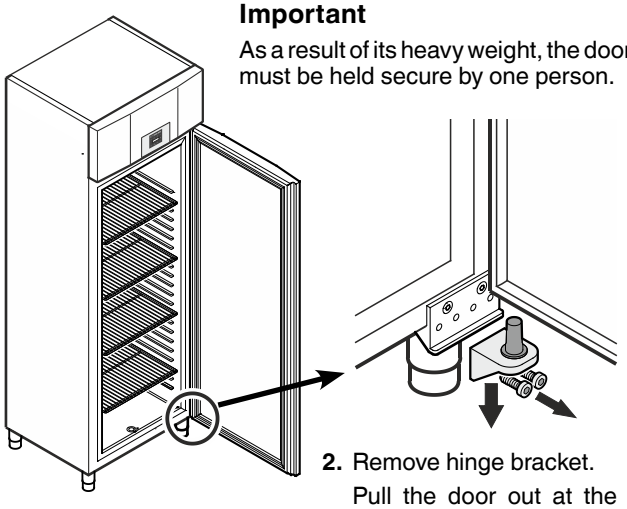

2. Remove hinge bracket.
Pull the door out at the bottom and lift off.

3. Remove bearing ring from upper door mounting.

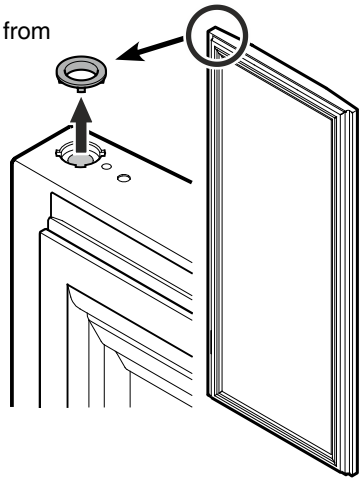

4. Remove the hinge components from the hinge bracket.

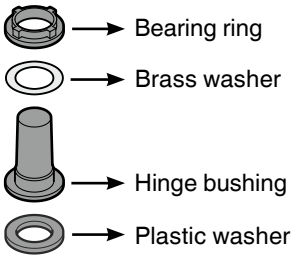

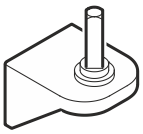

Note on point 4

The hinge bushing with brass washer and bearing ring may stick in the door mounting when you pull out the hinge bracket and, in this case, must be removed from it.

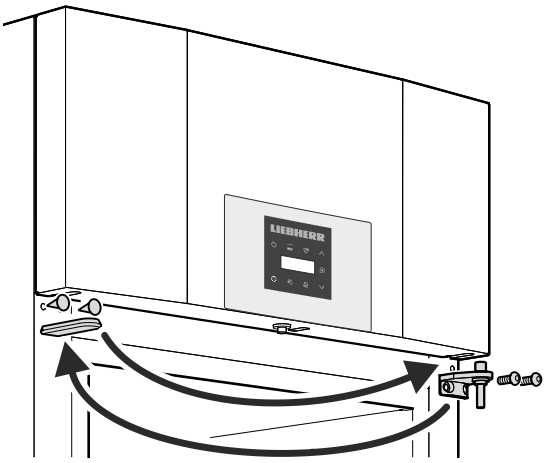

5. Transfer the upper hinge bracket and covers to the opposite side.

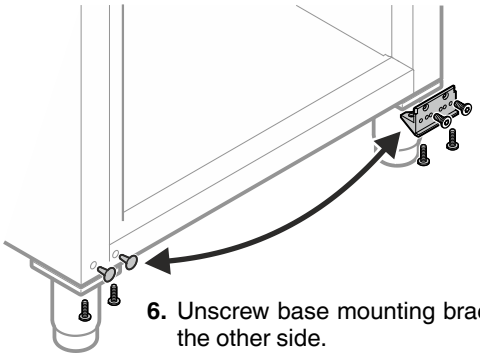

6. Unscrew base mounting bracket and attach on the other side.

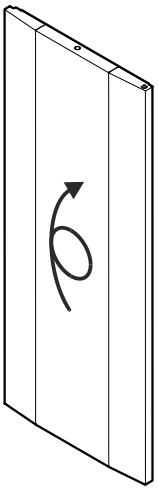

7. Turn the door by 180°.

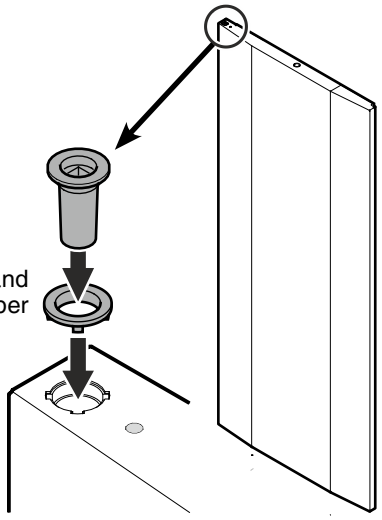

8. Insert the bearing ring and hinge bushing in the upper door mounting.

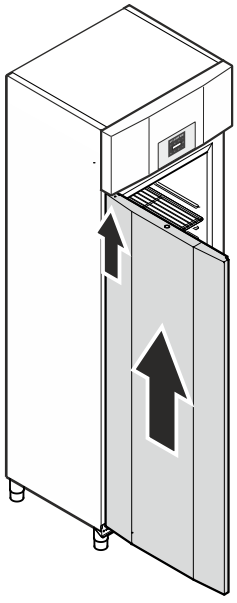

9. Keeping door open at 90°, suspend in top square pin.

⚠ WARNING!

It is essential that the door is open at an angle of 90° during installation.

If the door is installed in the closed position, this will lead to destruction of the self-closing mechanism on the first opening and closing of the door.

Important

As a result of its heavy weight, the door must be held secure by one person.

10. Fit the hinge components on the hinge bracket.

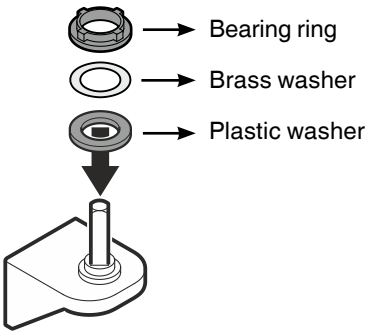

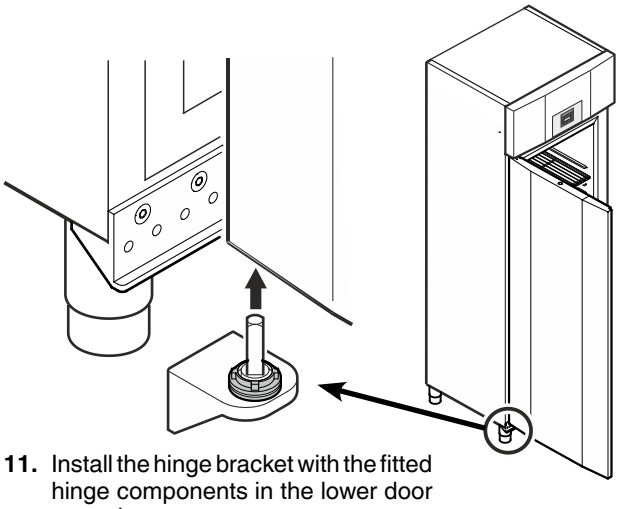

11. Install the hinge bracket with the fitted hinge components in the lower door mounting.

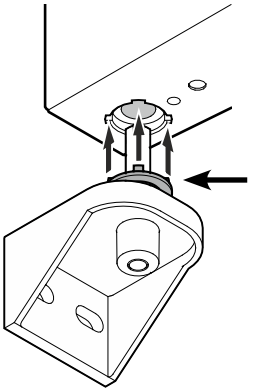

Note on point 11

The tabs on the bearing ring must fit into the recesses of the door mounting during installation.

If necessary, gently rotate the upper ring.

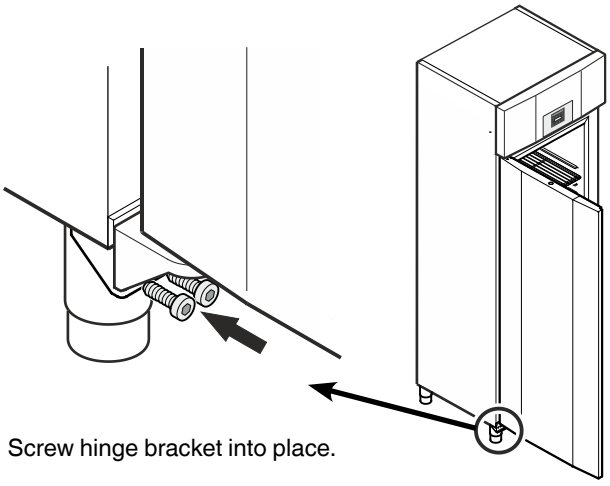

12. Screw hinge bracket into place.

Liebherr-Hausgeräte GmbH
Memminger Straße 77-79
88416 Ochsenhausen
Germany
home.liebherr.com