PAA 642 IX/I WE

12NC: F100513

GTIN (EAN) code: 8050147005132



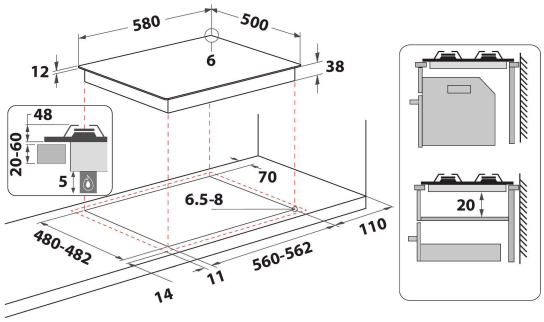

MAIN FEATURES

Product group	Hob
Construction type	Built-in
Type of control	Mechanical
Type of control settings	Knob
Number of gas burners	4
Number of electric cooking zones	0
Number of electric plates	0
Number of radiant plates	0
Number of halogen plates	0
Number of induction plates	0
Number of electric warming zones	0
Location of control panel	Lateral
Basic surface material	Stainless steel
Main colour of product	Inox
Electrical connection rating (W)	0
Gas connection rating (W)	0
Gas type	Methane
Current (A)	-
Voltage (V)	220-240
Frequency (Hz)	50/60
Length of Electrical Supply Cord (cm)	100
Plug type	No
Gas connection	N/A
Width of the product	580
Height of the product	28
Depth of the product	500
Minimum niche height	0
Minimum niche width	555
Niche depth	475
Net weight (kg)	8.7
Automatic programmes	No

TECHNICAL FEATURES

Power on indicator	No
Number of indicators	0
Type of regulation	Fast
Type of lid	Without
Residual heat indicator	Without
Main on/off switch	No
Safety device	No
Timer	No

PERFORMANCES

Energy input	Gas