WL B2977 NE

12NC: 859991580870

GTIN (EAN) code: 8003437601699

SENSING THE DIFFERENCE

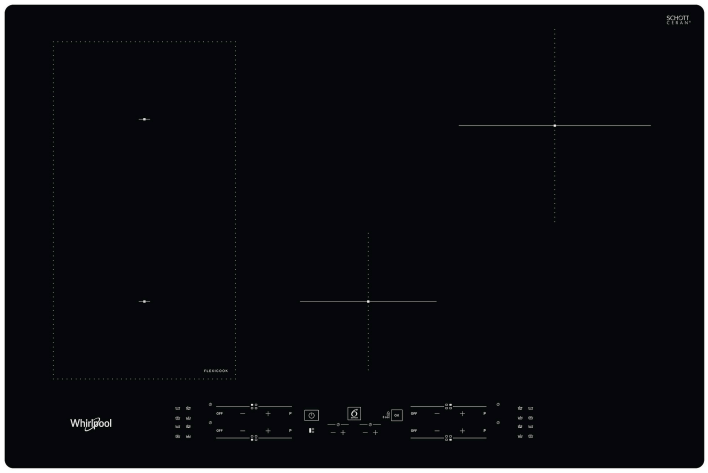

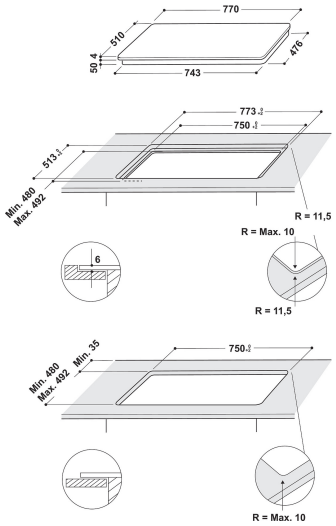

- 6TH Sense Technology
- 4 induction cooking zones
- Easy installation
- FlexiCook
- Pan Detection
- Residual heat indicator
- Child lock
- Warm keeping function
- On/Off Switch
- Simmering function
- Melting function
- 77 cm hob
- Timer
- Black Glass Hob
- 4 Boosters
- 4 Plate on Indicator
- Total power declared: 7.2 kW

Whirlpool induction glass-ceramic hob - WL B2977 NE

4 induction rings. flexiCook zone technology, allowing you to combine multiple burners into a single cooking zone, for larger pots and pans. This Whirlpool induction glass-ceramic Hob features: An elegant technology, that heats the pan, not the hob, reducing energy dispersion and providing perfect cooking results. Electric power supply.

Direct access with buttons
A new user interface with dedicated buttons for each cooking zone. Each set of controls is mapped to the corresponding position on the hob surface to make it incredibly intuitive to use.

Power management
Outstanding energy efficiency. With the Power Management function, you set the hob's power level, to avoid the risk of overloading the power supply in your home.

Booster
Enjoy super fast boiling times with the Booster cooking zone.

Flexible Cooking
Automatic power settings. Select the cooking function on your touch display and your hob will automatically adjust the power level accordingly.

Melting
Perfect low-heat cooking. The Melting function allows you to cook at very low temperatures, providing you with the ideal solution for melting chocolate, butter or for cooking light, delicate sauces.

Keep warm
Warm meals, anytime. The low-powered Keep Warm function prevents your food from cooling, whilst the rest of the meal is being prepared.

Filo installation
Our cooktops are designed to be both beautiful and functional. The outstanding Filo Design of our integrated cooktops makes cleaning easier than ever before.

Induction technology
Faster, energy-efficient cooking. Induction technology heats the pan, not the hob, reducing energy dispersion by 10%, and providing perfect cooking results.

Booster 3Kw
Enjoy ideal results, faster. This Whirlpool Hob features a 3Kw booster for faster, effective heating results.

Simmering
Superb simmering. The Simmering function allows you to obtain the perfect results for your slow-cooking recipes, and prevents your food from toughening.

WL B2977 NE

12NC: 859991580870

GTIN (EAN) code: 8003437601699

Whirlpool
SENSING THE DIFFERENCE

MAIN FEATURES

Product group	Hob
Construction type	Built-in
Type of control	Electronic
Type of control settings	-
Number of gas burners	0
Number of electric cooking zones	4
Number of electric plates	0
Number of radiant plates	0
Number of halogen plates	0
Number of induction plates	4
Number of electric warming zones	0
Location of control panel	Front
Basic surface material	Ceramic Glass
Main colour of product	Black
Electrical connection rating (W)	7200
Gas connection rating (W)	0
Current (A)	31,3
Voltage (V)	220-240
Frequency (Hz)	50/60
Length of Electrical Supply Cord (cm)	120
Plug type	No
Gas connection	N/A
Width of the product	770
Height of the product	54
Depth of the product	510
Minimum niche height	30
Minimum niche width	750
Niche depth	480
Net weight (kg)	11.1
Automatic programmes	Yes

TECHNICAL FEATURES

Power on indicator	Yes
Number of indicators	4
Type of regulation	Stepless energy regulated
Type of lid	Without
Residual heat indicator	Separate
Main on/off switch	Yes
Safety device	-
Timer	Yes

PERFORMANCES

Energy input	Electric