# Instructions for use

## WASHING MACHINE



GB

English,1

EWD 81482

## Contents


### Installation, 2-3-4-5
Unpacking and levelling
Connecting the electricity and water supplies
The first wash cycle
Technical data

### Care and maintenance, 6
Cutting off the water or electricity supply
Cleaning the washing machine
Cleaning the detergent dispenser drawer
Caring for the door and drum of your appliance
Cleaning the pump
Checking the water inlet hose

### Precautions and tips, 7
General safety
Disposal

### Description of the washing machine and starting a wash cycle, 8-9
Control panel
Indicator lights
Starting a wash cycle

### Wash cycles, 10
Table of wash cycles
Fast daily cycles

### Personalisation, 11
Setting the temperature
Setting the spin speed
Functions

### Detergents and laundry, 12
Detergent dispenser drawer
Preparing the laundry
Special wash cycles
Load balancing system

### Troubleshooting, 13-14

### Product Guarantee and Repair Information, 15


INDESIT

# Installation

GB

! Keep this instruction manual in a safe place for future reference. Should the appliance be sold, transferred or moved, make sure the instruction manual accompanies the washing machine to inform the new owner as to its operation and features.
! Read these instructions carefully: they contain vital information on installation, use and safety.

## Unpacking and levelling

### Unpacking

1. Unpack the washing machine.
2. Check whether the washing machine has been damaged during transport. If this is the case, do not install it and contact your retailer.

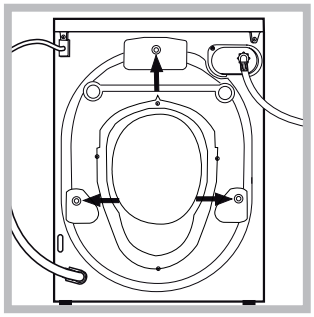

3. Remove the **3** protective screws and the rubber bush with the respective spacer, situated on the rear of the appliance *(see also the installation leaflet).*

4. Seal the gaps using the plastic plugs provided.
5. Keep all the parts: you will need them again if the washing machine needs to be moved to another location.
! Packaging materials are not children's toys.

### Levelling

Your machine may make a considerable amount of noise if the two front feet have not been adjusted correctly.
1. Install the washing machine on a flat sturdy floor, without resting it up against walls, furniture cabinets or other.

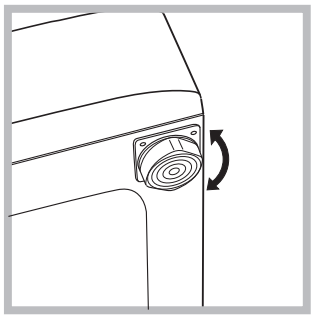

2. If the floor is not perfectly level, compensate for any unevenness by tightening or loosening the adjustable front feet *(see figure)*; the angle of inclination, measured according to the worktop, must not exceed 2°.

Levelling your appliance correctly will provide it with stability and avoid any vibrations, noise and shifting during operation. If it is placed on a fitted or loose carpet, adjust the feet in such a way as to allow enough room for ventilation beneath the washing machine.

## Electric and water connections

### Connecting the water inlet hose

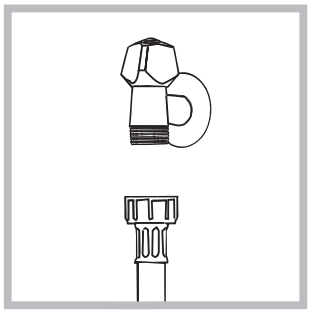

1. Connect the supply pipe by screwing it to a cold water tap using a 3/4 gas threaded connection *(see figure).* Before performing the connection, allow the water to run freely until it is perfectly clear.

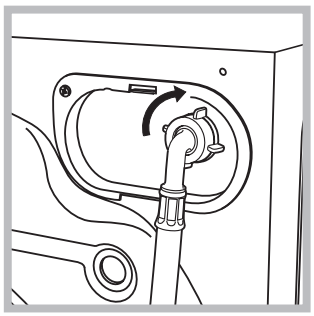

2. Connect the other end of the water inlet hose to the washing machine, screwing it onto the appliance's cold water inlet, situated on the top right-hand side on the rear of the appliance *(see figure).*

3. Make sure there are no kinks or bends in the hose.

! The water pressure at the tap must be within the values indicated in the Technical details table *(on the page 5).*

! If the water inlet hose is not long enough, contact a specialist store or an authorised serviceman.

! Ensure that the supply taps are allowing water through. Old taps may seize in the closed position and thus prevent water reaching the machine.

## Connecting the drain hose

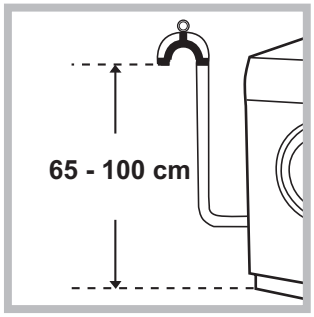


Connect the drain hose, without bending it, to a draining duct or a wall drain situated between 65 and 100 cm from the floor;

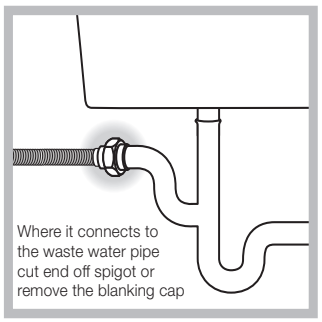


The drain hose may be connected to an under-sink trap. Before connecting the drain hose from the machine ensure that any blanks or removable ends have been taken off the spigot.

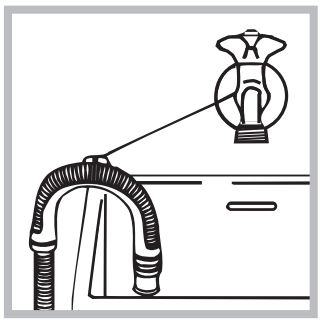

If it is placed over the edge of a basin or sink be sure the free end of the hose should not be underwater.

**!** We advise against the use of hose extensions; in case of absolute need, the extension must have the same diameter as the original hose and must not exceed 150 cm in length. Ensure that if the drain hose is pushed into a standpipe, that the end does not go down more than 15cms (6 inches). If the hose is pushed down too far, this may cause the machine to self -syphon ie. continuously empty as it is filling.

## Electric connection

Before plugging the appliance into the mains socket, make sure that:

- the socket is earthed and in compliance with the applicable law;

- the socket is able to sustain the appliance's maximum power load indicated on the Technical Data Plate fixed on the machine;

- the supply voltage is included within the values indicated on the Technical Data Plate fixed on the machine.

- the socket is compatible with the washing machine's plug. If this is not the case, replace the socket or the plug.

Your appliance is now supplied with a 13 amp fused plug it can be plugged into a 13 amp socket for immediate use. Before using the appliance please read the instructions below.

WARNING - THIS APPLIANCE MUST BE EARTHED.
THE FOLLOWING OPERATIONS SHOULD BE CARRIED OUT BY A QUALIFIED ELECTRICIAN.

*Replacing the fuse:*
When replacing a faulty fuse, a 13 amp ASTA approved fuse to BS 1362 should always be used, and the fuse cover re-fitted. If the fuse cover is lost, the plug must not be used until a replacement is obtained.
Replacement fuse covers:
If a replacement fuse cover is fitted, it must be of the correct colour as indicated by the coloured marking or the colour that is embossed in words on the base of the plug. Replacements can be obtained directly from your nearest Service Depot.

*Removing the plug:*
If your appliance has a non-rewireable moulded plug and you should wish to re-route the mains cable through partitions, units etc., please ensure that either:
the plug is replaced by a fused 13 ampere rewireable plug bearing the BSI mark of approval.
*or:*
the mains cable is wired directly into a 13 amp cable outlet, controlled by a switch, (in compliance with BS 5733) which is accessible without moving the appliance.

*Disposing of the plug:*
Ensure that before disposing of the plug itself, you make the pins unusable so that it cannot be accidentally inserted into a socket.

Instructions for connecting cable to an alternative plug:
Important: the wires in the mains lead are coloured in accordance with the following code:

| | |
|---|---|
| **Green & Yellow** | **Earth** |
| **Blue** | **Neutral** |
| **Brown** | **Live** |

As the colours of the wires in the lead may not correspond with the coloured markings identifying the terminals in your plug, proceed as follows:
Connect Green & Yellow wire to terminal marked E or ⏚ or coloured Green or Green & Yellow.
Connect Brown wire to terminal marked L or coloured Red.
Connect Blue wire to terminal marked N or coloured Black.
If a 13 amp plug (BS 1363) is used it must be fitted with a 13 amp fuse, either in the plug or adaptor or at the distribution board.
If you are in any doubt regarding the electrical supply to your machine, consult a qualified electrician before use.
How to connect an alternative plug:
The wires in this mains lead are coloured in accordance with the following code:

| | |
|---|---|
| **BLUE** | **NEUTRAL (N)** |
| **BROWN** | **LIVE (L)** |
| **GREEN & YELLOW** | **EARTH (E)** |

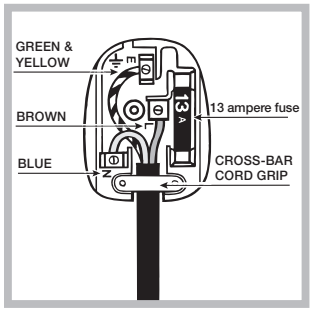


*Disposing of the appliance:*
When disposing of the appliance please remove the plug by cutting the mains cable as close as possible to the plug body and dispose of it as described above.

**!** The washing machine should not be installed in an outdoor environment, not even where the area is sheltered, because it may be very dangerous to leave it exposed to damp, rain and thunderstorms.

**!** When the washing machine is installed, the mains socket must be within easy reach.

**!** Do not use extensions or multiple sockets.

**!** The power supply cable must never be bent or dangerously compressed.

**!** The power supply cable must only be replaced by an authorised serviceman.

Warning! The company denies all liability if and when these norms are not respected.

## The first wash cycle

Once the appliance has been installed, and before you use it for the first time, run a wash cycle with detergent and no laundry, using the wash cycle **16**.

| **Technical data** | |
|---|---|
| **Model** | EWD 81482 |
| **Dimensions** | width 59.5 cm<br>height 85 cm<br>depth 57.2 cm |
| **Capacity** | from 1 to 8 kg |
| **Electrical connections** | please refer to the technical data plate fixed to the machine |
| **Water connection** | maximum pressure<br>1 MPa (10 bar)<br>minimum pressure<br>0.05 MPa (0.5 bar)<br>drum capacity 54 litres |
| **Spin speed** | up to 1400 rotations per minute |
| **Test wash cycles in accordance with regulations 1061/2010 and 1015/2010** | Programme 15:<br>Eco Cotton 60°.<br>Programme 15:<br>Eco Cotton 40°. |
| CE | This appliance conforms to the following EC Directives:<br>- 2004/108/EC (Electromagnetic Compatibility)<br>- 2012/19/EU - WEEE<br>- 2006/95/EC Low Voltage) |

| COMMISSION DELEGATED REGULATION (EU) No 1061/2010 | |
|---|---|
| Brand | INDESIT |
| Model | EWD 81482 W UK.M |
| Rated capacity in kg of cotton | 8 |
| Energy efficiency class on a scale from A+++ (low consumption) to G (high consumption) | A++ |
| Energy consumption per year in kWh [1)] | 222 |
| Energy consumption of the standard 60 °C cotton programme at full load in kWh [2)] | 1.343 |
| Energy consumption of the standard 60 °C cotton programme at partial load in kWh [2)] | 0.754 |
| Energy consumption of the standard 40 °C cotton programme at partial load in kWh [2)] | 0.678 |
| Power consumption of the off-mode in W | 0.5 |
| Power consumption of the left-on mode in W | 8 |
| Water consumption per year in litres [3)] | 11830 |
| Spin-drying efficacy class on a scale from G (minimum efficacy) to A (maximum efficacy) | B |
| Maximum spin speed attained [4)] | 1400 |
| Remaining moisture content [5)] | 53.0% |
| Programme time of the "standard 60 °C cotton" at full load in minutes | 190 |
| Programme time of the "standard 60 °C cotton" at partial load in minutes | 130 |
| Programme time of the "standard 40°C cotton" at partial load in minutes | 125 |
| Duration of the left-on mode in minutes | 30 |
| Noise in dB(A) re 1 pW washing [6)] | 56 |
| Noise in dB(A) re 1 pW spinning [6)] | 81 |
| Built-in model | |

[1)] The "standard 60°C cotton" at full and partial load and the "standard 40°C cotton" at partial load are the standard washing programmes to which the information in the label and the fiche relates. Standard 60°C cotton and standard 40°C cotton are suitable to clean normally soiled cotton laundry and are the most efficient programmes in terms of combined energy and water consumption. Partial load is half the rated load.

[2)] Based on 220 standard washing cycles for cotton programmes at 60°C and 40°C at full and partial load, and the consumption of the low-power modes. Actual energy consumption will depend on how the appliance is used.

[3)] Based on 220 standard washing cycles for cotton programmes at 60°C and 40°C at full and partial load. Actual water consumption will depend on how the appliance is used.

[4)] For the standard 60 °C at full and partial load or the 40°C at partial whichever is lower.

[5)] Attained for 60 °C cotton at full and partial load or the 40°C at partial whichever is higher.

[6)] Based on washing and spinning phases for the standard 60°C cotton programme at full load.

# Care and maintenance

GB

## Cutting off the water and electricity supplies

- Turn off the water tap after every wash cycle. This will limit wear on the hydraulic system inside the washing machine and help to prevent leaks.
- Unplug the washing machine when cleaning it and during all maintenance work.

## Cleaning the washing machine

The outer parts and rubber components of the appliance can be cleaned using a soft cloth soaked in lukewarm soapy water. Do not use solvents or abrasives.

## Cleaning the detergent dispenser drawer

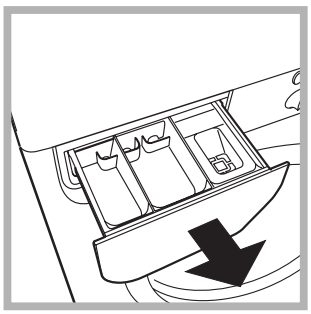

Remove the dispenser by raising it and pulling it out (*see figure*). Wash it under running water; this operation should be repeated frequently.

## Caring for the door and drum of your appliance

- Always leave the porthole door ajar in order to prevent unpleasant odours from forming.

## Cleaning the pump

The washing machine is fitted with a self-cleaning pump which does not require any maintenance. Sometimes, small items (such as coins or buttons) may fall into the pre-chamber which protects the pump, situated in its bottom part.

**!** Make sure the wash cycle has finished and unplug the appliance.

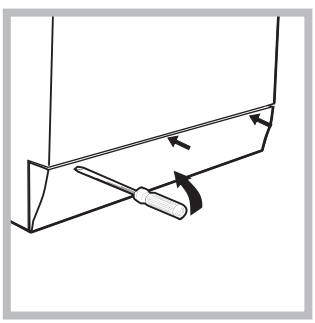

To access the pre-chamber:

1. using a screwdriver, remove the cover panel on the lower front part of the washing machine (*see figure*);

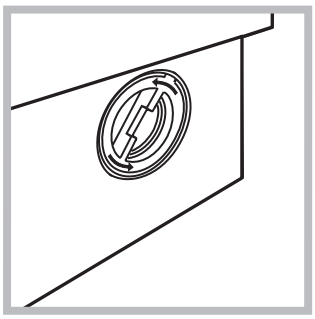

2. unscrew the lid by rotating it anti-clockwise (*see figure):* a little water may trickle out. This is perfectly normal;

3. clean the inside thoroughly;
4. screw the lid back on;
5. reposition the panel, making sure the hooks are securely in place before you push it onto the appliance.

## Checking the water inlet hose

Check the inlet hose at least once a year. If there are any cracks, it should be replaced immediately: during the wash cycles, water pressure is very strong and a cracked hose could easily split open.

**!** Never use second-hand hoses.

# Precautions and tips

INDESIT

GB

! This washing machine was designed and constructed in accordance with international safety regulations. The following information is provided for safety reasons and must therefore be read carefully.

## General safety

- This appliance was designed for domestic use only.
- This appliance can be used by children aged from 8 years and above and persons with reduced physical, sensory or mental capabilities or lack of experience and knowledge if they have been given supervision or instruction concerning use of the appliance in a safe way and understand the hazards involved. Children shall not play with the appliance. Cleaning and user maintenance shall not be made by children without supervision.
- Do not touch the machine when barefoot or with wet or damp hands or feet.
- Do not pull on the power supply cable when unplugging the appliance from the electricity socket. Hold the plug and pull.
- Do not open the detergent dispenser drawer while the machine is in operation.
- Do not touch the drained water as it may reach extremely high temperatures.
- Never force the porthole door. This could damage the safety lock mechanism designed to prevent accidental opening.
- If the appliance breaks down, do not under any circumstances access the internal mechanisms in an attempt to repair it yourself.
- Always keep children well away from the appliance while it is operating.
- The door can become quite hot during the wash cycle.
- If the appliance has to be moved, work in a group of two or three people and handle it with the utmost care. Never try to do this alone, because the appliance is very heavy.
- Before loading laundry into the washing machine, make sure the drum is empty.

## Disposal

- Disposing of the packaging materials: observe local regulations so that the packaging may be re-used.
- The European Directive 2012/19/EU - WEEE on Waste Electrical and Electronic Equipment, requires that old household electrical appliances must not be disposed of in the normal unsorted municipal waste stream. Old appliances must be collected separately in order to optimise the recovery and recycling of the materials they contain and reduce the impact on human health and the environment. The crossed out “wheeled bin” symbol on the product reminds you of your obligation, that when you dispose of the appliance it must be separately collected.

Consumers should contact their local authority or retailer for information concerning the correct disposal of their old appliance.

# Description of the washing machine and starting a wash cycle

GB

## Control panel

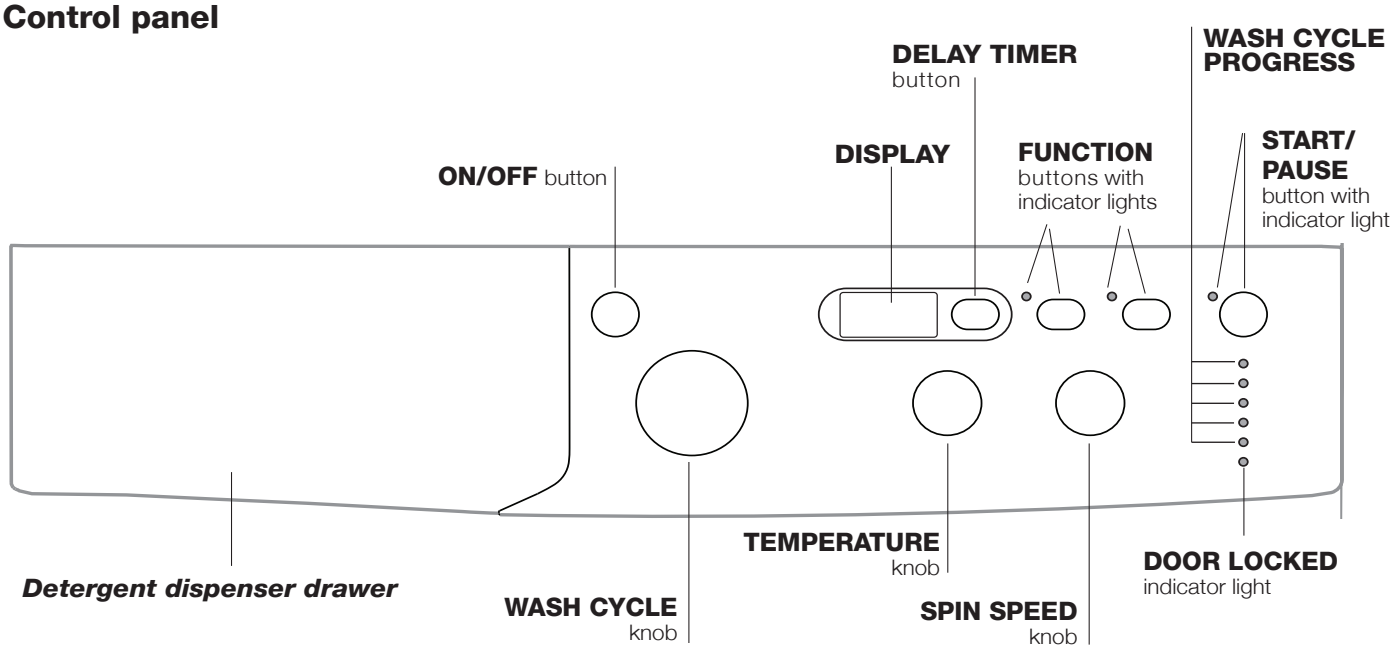


***Detergent dispenser drawer:*** used to dispense detergents and washing additives (*see "Detergents and laundry"*).

**ON/OFF** button: switches the washing machine on and off.

**WASH CYCLE** knob**:** used to set the desired wash cycle *(see "Table of wash cycles").*

**FUNCTION** buttons with indicator light**:** used to select the available functions. The indicator light corresponding to the selected function will remain lit.

**TEMPERATURE** knob: sets the temperature or the cold wash cycle (*see "Personalisation"*).

**SPIN SPEED** knob: sets the spin speed or exclude the spin cycle completely (*see "Personalisation"*).

**DISPLAY:** used to view the duration of the various cycles available and the remaining time of a cycle in progress; if the DELAY TIMER option has been selected, the countdown to the start of the selected cycle will appear.

**DELAY TMER** button **:** press to set a delayed start time for the selected wash cycle. The delay time will be shown on the display.

**WASH CYCLE PROGRESS** indicator lights: used to monitor the progress of the wash cycle.
The illuminated indicator light shows which phase is in progress.

**DOOR LOCKED** indicator light: indicates whether the door may be opened or not *(see next page)*.

**START/PAUSE** button with indicator light: starts or temporarily interrupts the wash cycles.
**N.B.** To pause the wash cycle in progress, press this button; the corresponding indicator light will flash orange, while the indicator light for the current wash cycle phase will remain lit in a fixed manner. If the DOOR LOCKED indicator light is switched off, the door may be opened (wait approximately 3 minutes).
To start the wash cycle from the point at which it was interrupted, press this button again.

**Standby mode**
This washing machine, in compliance with new energy saving regulations, is fitted with an automatic standby system which is enabled after about 30 minutes if no activity is detected. Press the ON-OFF button briefly and wait for the machine to start up again.

## Indicator lights

The indicator lights provide important information.
This is what they can tell you:

**Wash cycle phase indicator lights**
Once the desired wash cycle has been selected and has begun, the indicator lights switch on one by one to indicate which phase of the cycle is currently in progress.

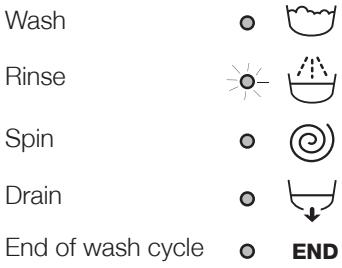


**Function buttons and corresponding indicator lights**
When a function is selected, the corresponding indicator light will illuminate.
If the selected function is not compatible with the programmed wash cycle, the corresponding indicator light will flash and the function will not be activated.
If the selected function is not compatible with another function which has been selected previously, the indicator light corresponding to the first function selected will flash and only the second function will be activated; the indicator light corresponding to the enabled option will remain lit.

**Door locked indicator light**
When the indicator light is on, the porthole door is locked to prevent it from being opened; make sure the indicator light is off before opening the door (wait approximately 3 minutes). To open the door during a running wash cycle, press the START/PAUSE button; the door may be opened once the DOOR LOCKED indicator light turns off.

## Starting a wash cycle

**1.** Switch the washing machine on by pressing the ON/OFF button. All indicator lights will switch on for a few seconds, then they will switch off and the START/PAUSE indicator light will pulse.
**2.** Load the laundry and close the door.
**3.** Set the WASH CYCLE knob to the desired programme.
**4.** Set the washing temperature (*see "Personalisation").*
***5.*** Set the spin speed *(see "Personalisation").*
**6.** Measure out the detergent and washing additives (*see "Detergents and laundry").*
**7.** Select the desired functions.
**8.** Start the wash cycle by pressing the START/PAUSE button and the corresponding indicator light will remain lit in a fixed manner, in green.
To cancel the set wash cycle, pause the machine by pressing the START/PAUSE button and select a new cycle.
**9.** At the end of the wash cycle the **END** indicator light will switch on. The door can be opened once the DOOR LOCK indicator light turns off (wait approximately 3 minutes). Take out your laundry and leave the appliance door ajar to make sure the drum dries completely. Switch the washing machine off by pressing the ON/OFF button.

# Wash cycles

GB

## Table of wash cycles

| Wash cycles | Description of the wash cycle | Max. temp. (°C) | Max. speed (rpm) | Detergents | | Max. load (kg) | Residual dampness % | Energy consumption kWh | Total water lt | Cycle duration |
|---|---|---|---|---|---|---|---|---|---|---|
| | | | | Wash | Fabric softener | | | | | |
| | EVERYDAY FAST | | | | | | | | | |
| 1 | **Mix Coloured 59'** | 40° | 1000 | ● | ● | 8 | - | - | - | 59' |
| 2 | **Cotton 59'** | 60° | 1000 | ● | ● | 8 | - | - | - | 59' |
| 3 | **Cotton 45'** | 40° | 1200 | ● | ● | 4 | - | - | - | 45' |
| 4 | **Synthetics 59' (3)** | 40° (Max. 60°) | 1000 | ● | ● | 3 | 44 | 0.66 | 58 | 59' |
| 5 | **Mix 30'** | 30° | 800 | ● | ● | 3 | 70 | 0.17 | 31 | 30' |
| 6 | **Express 20'** | 20° | 800 | ● | ● | 3.5 | - | - | - | 20' |
| | Special & Partial | | | | | | | | | |
| 7 | **Gym Kit** | 40° | 600 | ● | ● | 4 | - | - | - | ** |
| 8 | **Sport Shoes** | 30° | 600 | ● | ● | Max. 2 pairs | - | - | - | ** |
| 9 | **Baby:** Heavily soiled delicate colours. | 40° | 800 | ● | ● | 3 | - | - | - | ** |
| 10 | **Rinse** | - | 1400 | - | ● | 8 | - | - | - | ** |
| 11 | **Spin + Drain** | - | 1400 | - | - | 8 | - | - | - | ** |
| 11 | **Only Drain *** | - | ⊘ | - | - | 8 | - | - | - | ** |
| | Dedicated | | | | | | | | | |
| 12 | **Duvet:** for down-stuffed garments. | 30° | 1000 | ● | ● | 2.5 | - | - | - | ** |
| 13 | **Wool:** for wool, cashmere, etc. | 40° | 800 | ● | ● | 1.5 | - | - | - | ** |
| 14 | **Silk & Curtains:** for garments in silk and viscose, lingerie. | 30° | 0 | ● | ● | 1 | - | - | - | ** |
| 15 | **Eco Cotton 60° (1):** heavily soiled whites and resistant colours. | 60° | 1400 | ● | ● | 8 | 53 | 1.34 | 54.7 | 190' |
| 15 | **Eco Cotton 40° (2):** lightly soiled whites and delicate colours. | 40° | 1400 | ● | ● | 8 | 53 | 0.93 | 82 | 170' |
| 16 | **Cotton:** extremely soiled whites. | 90° | 1400 | ● | ● | 8 | - | - | - | ** |

*** If you select programme 11 and exclude the spin cycle, the machine will drain only.**

**** The duration of the wash cycle can be checked on the display.**

*The length of cycle shown on the display or in this booklet is an estimation only and is calculated assuming standard working conditions. The actual duration can vary according to factors such as water temperature and pressure, the amount of detergent used, the amount and type of load inserted, load balancing and any wash options selected.*

**1) Test wash cycle in compliance with regulations 1061/2010: set wash cycle 15 with a temperature of 60°C.**
*This cycle is designed for cotton loads with a normal soil level and is the most efficient in terms of both electricity and water consumption; it should be used for garments which can be washed at 60°C. The actual washing temperature may differ from the indicated value.*
**2) Test wash cycle in compliance with regulations 1061/2010: set wash cycle 15 with a temperature of 40°C.**
*This cycle is designed for cotton loads with a normal soil level and is the most efficient in terms of both electricity and water consumption; it should be used for garments which can be washed at 40°C. The actual washing temperature may differ from the indicated value.*

**For all Test Institutes:**
**2) Long wash cycle for cottons: set wash cycle 15 with a temperature of 40°C.**
**3) Long programme for synthetics: set programme 4, then select the "Extra Wash *" option.**

## Fast daily cycles

A complete set of fast programmes to wash the most commonly used fabrics - even with a full load - and to remove the most frequent daily dirt in less than 1 hour.
**Mix Coloured 59':** to wash mixed and coloured items together.
**Cotton 59':** cycle designed to wash cotton garments - mainly white items. It can be used with powder detergent too.
**Cotton 45':** short cycle designed to wash delicate cotton items.
**Synthetics 59':** specific for synthetic items. If the dirt is difficult to remove, the temperature can be increased up to 60° and powder detergent can be used too.
**Mix 30':** short cycle designed to wash a mixed load of cotton and synthetic fabrics - white and coloured items together.
**Express 20':** this programme refreshes your items, making them perfumed again in just 20 minutes.

# Personalisation

INDESIT

GB

## Setting the temperature

Turn the TEMPERATURE knob to set the wash temperature (see *Table of wash cycles*).
The temperature may be lowered, or even set to a cold wash ❄.
The washing machine will automatically prevent you from selecting a temperature which is higher than the maximum value set for each wash cycle.
**!** Exception: if the **4** programme is selected, the temperature can be increased up to a value of 60°C.

## Setting the spin speed

Turn the SPIN SPEED knob to set the spin speed for the selected wash cycle.
The maximum spin speeds available for each wash cycle are as follows:

| **Wash cycles** | **Maximum spin speed** |
|---|---|
| Cottons | 1400 rpm |
| Synthetics | 1000 rpm |
| Wool | 800 rpm |

The spin speed may be lowered, or the spin cycle can be excluded altogether by selecting the symbol .
The washing machine will automatically prevent you from selecting a spin speed which is higher than the maximum speed set for each wash cycle.

## Functions

The various wash functions available with this washing machine will help to achieve the desired results, every time.
To activate the functions:
1. Press the button corresponding to the desired function;
2. the function is enabled when the corresponding indicator light is illuminated.

Note:

- If the selected function is not compatible with the programmed wash cycle, the corresponding indicator light will flash and the function will not be activated.
- If the selected function is not compatible with another function which has been selected previously, the indicator light corresponding to the first function selected will flash and only the second function will be activated; the indicator light corresponding to the enabled option will remain lit.

### Delay timer

To set a delayed start for the selected programme, press the corresponding button repeatedly until the required delay period has been reached. When this option is enabled, the symbol lights up on the display. To remove the delayed start option press the button until the text “OFF” appears on the display.

### Extra Wash

Enable the **Extra Wash** option for very dirty items, where compatible. Press this option to let the cycle automatically re-adjust all wash parameters through a longer lasting cycle. The option always leaves the temperature unchanged, while the spin cycle is automatically brought back to maximum levels. The user can set the spin cycle back to the desired value at any time.

### Energy Saver

The Energy Saver option washes cotton and synthetic items, saving energy and helping the environment. Energy saving is due to a cold wash cycle, while an enhanced mechanical action and optimised water use make it possible to reach the desired result. Recommended for slightly soiled garments. Use of liquid detergent recommended.

# Detergents and laundry

GB

## Detergent dispenser drawer

Good washing results also depend on the correct dose of detergent: adding too much detergent will not necessarily result in a more efficient wash, and may in fact cause build up on the inside of your appliance and contribute to environmental pollution.

**!** Do not use hand washing detergents because these create too much foam.

**!** Use powder detergent for white cotton garments, for prewashing, and for washing at temperatures over 60°C.

**!** Follow the instructions given on the detergent packaging.

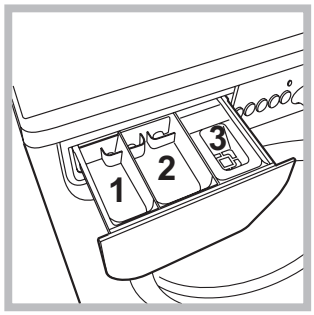


Open the detergent dispenser drawer and pour in the detergent or washing additive, as follows.

**!** Do not put the detergent into compartment **1**.
**!** The detergent must be put only in the compartment **2**.
**compartment 2: Detergent for the wash cycle (powder or liquid)**
Liquid detergent should only be poured in immediately prior to the start of the wash cycle.
**compartment 3: Additives (fabric softeners, etc.)**
The fabric softener should not overflow the grid.
**Note:** If a "tablet detergent" is used, always follow the manufacturer's instructions.

## Preparing the laundry

- Divide the laundry according to:
  - the type of fabric/the symbol on the label
  - the colours: separate coloured garments from whites.
- Empty all garment pockets and check the buttons.
- Do not exceed the values listed in the "Table of wash cycles", which refer to the weight of the laundry when dry.

**How much does your laundry weigh?**

1 sheet 400-500 g
1 pillow case 150-200 g
1 tablecloth 400-500 g
1 bathrobe 900-1200 g
1 towel 150-250 g

## Special wash cycles

**Gym Kit:** cycle suitable to wash all sports items together, including gym towels, while respecting their fibres (follow the instructions in the garment labels).
**Sport Shoes:** is for washing sports shoes; for best results, do not wash more than 2 pairs simultaneously.
We recommend fastening any strings before introducing the shoes into the drum.
**Baby:** cycle designed for dirt typical of children's garments in that it effectively removes any traces of residual detergent.
**Duvet:** to wash single duvets (the weight of which should not exceed 2,5 kg), cushions or clothes padded with goose down such as puffa jackets, use the special wash cycle number **12**.
We recommend that duvets are placed in the drum with their edges folded inwards *(see figure)* and that no more than **¾** of the total volume of the drum is used. To achieve the best results, we recommend that a liquid detergent is used and placed inside the detergent dispenser drawer.



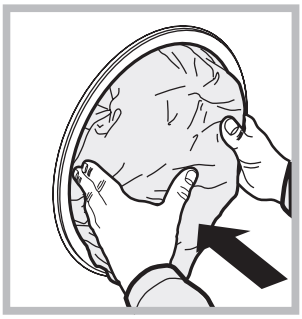

**Wool:** all wool garments can be washed using programme **13**, even those carrying the "hand-wash only" label. For best results, use special detergents and do not exceed 1,5 kg of laundry.
**Silk:** use special wash cycle **14** to wash all silk garments. We recommend the use of special detergent which has been designed to wash delicate clothes.
**Curtains:** fold curtains and place them in a pillow case or mesh bag. Use wash cycle **14**.

## Load balancing system

Before every spin cycle, to avoid excessive vibrations and to distribute the load in a uniform manner, the drum rotates continuously at a speed which is slightly greater than the washing rotation speed. If, after several attempts, the load is not balanced correctly, the machine spins at a reduced spin speed. If the load is excessively unbalanced, the washing machine performs the distribution process instead of spinning. To encourage improved load distribution and balance, we recommend small and large garments are mixed in the load.

# Troubleshooting

INDESIT

GB

Your washing machine could fail to work. Before contacting the Technical Assistance Centre (*see "Assistance"*), make sure that the problem cannot be solved easily using the following list.

| Problem: | Possible causes / Solutions: |
|---|---|
| **The machine does not switch on.** | • The appliance is not plugged into the socket fully, or not enough to make contact.<br>• There is no power to the socket, or the fuse has blown in the mains plug. |
| **The wash cycle does not start.** | • The door is not closed properly.<br>• The ON/OFF button has not been pressed.<br>• The START/PAUSE button has not been pressed.<br>• The water tap has not been turned on to allow water to flow into the machine.<br>• A delayed start has been set. |
| **The machine does not fill with water or "H2O" will flash on the display.** | • The water inlet hose is kinked.<br>• The water inlet hose is not connected to the water supply.<br>• The water pressure is too low.<br>• The water tap has not been turned on to allow water to flow into the machine.<br>• There is no water supply to the house.<br>• The inlet valve filter is blocked.<br>• The START/PAUSE button has not been pressed. |
| **The machine continuously fills with water and continually drains away or Water left in the drum or Stuck on wash.** | • The top of the drain hose is too low - It must be fitted at a height between 65 and 100 cm from the floor *(see "Installation")*.<br>• The drain hose is connected incorrectly to the sink trap allowing water to run into the machine, the drain hose must be positioned higher than the bottom of the sink to prevent water flowing down the drain hose.<br>• The end of the drain hose has been pushed too far down the standpipe, the 'U' bracket should be fitted 100 mm from the end of the drain hose. |
| **The machine does not drain or spin or F05 error code in the display.** | • The Pump filter is blocked.<br>• The drain hose is kinked *(see "Installation")*.<br>• New Installation - The blanking cap or spigot has not been removed if connected under a sink.<br>• The drain hose or sink trap is blocked.<br>• The wash cycle does not include draining, some wash cycles require the drain phase to be started manually.<br>• The 'Spin Speed' selector knob is in the "⊘" position. |
| **The machine does not heat or poor wash results.** | • The 'Temperature' selector knob is in the "❄" position. |
| **The programme takes too long or The Display changes the estimated 'Time to End' during the programme.** | • Programme times will vary due to water pressure, the incoming water temperature and if the wash load goes out of balance. This will increase the programme times accordingly (see ' The machine wont spin properly' next page). |
| **The machine vibrates a lot during the spin cycle.** | • The feet have not been adjusted, enabling the machine to rock.<br>• New Installation - Either the Transit Bolts including the plastic spacers, or the Polystyrene Packaging have not been removed when installing the machine.<br>• The machine is trapped between cabinets and/or walls.<br>• The load is in a slight out of balance condition and machine is spinning, but at a lower speed. |

| | |
|---|---|
| **The machine is noisy.** | • There will always be some motor, pump and drum noise during spin. |
| **The machine wont spin properly.** | • Out of Balance detected when attempting to go into a spin cycle - If this happens the machine will continue to try to repeat the distribution of the load required before the machine will go into higher spin speeds - This will increase the programme time accordingly. This is a safety feature to prevent damage. Out of Balance can be caused by washing a single heavy item (eg duvet, quilt, etc). - Try the programme again using a different load. |
| **The machine leaks from the dispenser.** | • The dispenser drawer is blocked with detergent and requires cleaning.<br>• The water pressure is too high and requires turning down - turn down the tap on the water supply pipe slightly and try again.<br>• The machine is tilting forwards - It must be level when in its final position. |
| **The machine leaks (other than dispenser).** | • The fill hose is loose, check both the cabinet and tap ends.<br>• The fill hose is tight but still leaks, if so replace the rubber washers, or the fill hose is missing the rubber washer.<br>• The drain hose is not fixed in properly. |
| **The indicator lights on the console are flashing rapidly.** | • Switch off the machine and unplug it, wait for approximately 1 minute and then switch it back on again If the problem persists contact the Technical Assistance Service. |
| **The machine smells.** | • The machine requires a service wash. Run a 90 degree wash cycle with detergent and no laundry. |
| **The machine door cannot be opened.** | • The door will not open until the door lock indicator light goes out shortly after the program has finished. |
| **Door Seal damaged at the bottom.** | • The door seal has drainage holes at the bottom - This is normal. |
| **The water level is too low when the machine is washing.** | • The water level is correct if it can be seen at the bottom of the door. |
| **There is too much foam.** | • The detergent is not suitable for machine washing (it should display the text 'for washing machines' or 'hand and machine wash' or the like).<br>• Too much detergent was used - less detergent is required in soft water. |
| **After completing the programme, or before starting a programme, the machine has turned itself off (no lights).** | • To comply with new energy saving regulations the machine is fitted with an automatic standby system. Press 'ON/OFF' button for 3 seconds to activate the machine, it can then either be switched off or a new programme selected. |
| **General.** | • Your washing machine contains sensors that monitor progress during the wash cycle (eg: Water Levels, Temperatures, Out of Balance loads, Wash time/progress).<br>Normally, if your machine successfully completes the cycle, there is unlikely to be anything wrong! |

**Remember, you will be charged for a service call for problems caused by incorrect installation, as indicated on pages 2 to 4.**

**Not emptying contents from pockets may cause pump or drain blockages, or may damage the machine.**

**Do not wash items which do not have a wash label, or wash items that are not intended as machine washable.**

# Product Guarantee and Repair Information

GB

## Guarantee

### 12 Months Parts and Labour Guarantee

Your appliance has the benefit of our manufacturer's guarantee, which covers the cost of breakdown repairs for twelve months from the date of purchase. This gives you the reassurance that if, within that time, your appliance is proven to be defective because of either workmanship or materials, we will, at our discretion, either repair or replace the appliance at no cost to you:

This guarantee is subject to the following conditions:

- The appliance has been installed and operated correctly and in accordance with our operating and maintenance instructions.
- The appliance is used only on the electricity or gas supply printed on the rating plate.
- The appliance has been used for normal domestic purposes only.
- The appliance has not been altered, serviced, maintained, dismantled, or otherwise interfered with by any person not authorised by us.
- Any repair work must be undertaken by us or our appointed agent.
- Any parts removed during repair work or any appliance that is replaced become our property.
- The appliance is used in the United Kingdom or Republic of Ireland.

The guarantee does not cover:

- Damage resulting from transportation, improper use, neglect or interference or as a result of improper installation.
- Replacement of any consumable item or accessory. These include but are not limited to: plugs, cables, batteries, light bulbs, fluorescent tubes and starters, covers and filters.
- Replacement of any removable parts made of glass or plastic.

THIS GUARANTEE WILL NOT APPLY IF THE APPLIANCE HAS BEEN USED IN COMMERCIAL OR NON-DOMESTIC PREMISES.

### Recycling and Disposal Information

As part of Indesit's continued commitment to helping the environment, Indesit reserves the right to use quality, recycled components to keep down customer costs and minimise material wastage.
Please dispose of packaging and old appliances carefully. To minimise the risk of injury to children, remove the door, plug, and cut the mains cable off flush with the appliance. Dispose of these parts separately to ensure that the appliance can no longer be plugged into mains socket, and the door cannot be locked shut.

## Repairs and After Sales

For product help and advice, repairs, spare parts or accessories, we're here to help.

For local repair engineers - **03448 111 606**
ROI - **0818 313 413**

UK standard local rate applies
ROI local Irish rate applies

For Parts and Accessories visit:
**parts.indesit.co.uk/shop**

Please remember to register your appliance at **www.indesitservice.co.uk** to activate your 10 year parts guarantee.

How to find your model and serial number:

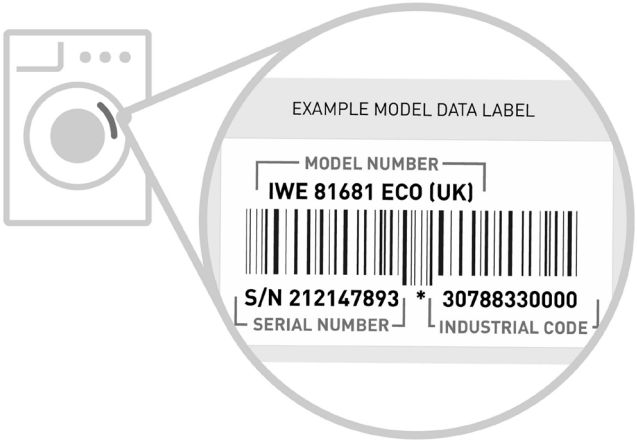

GB

**Üretici Firma:**
**Indesit Company Beyaz Eşya**
**PAZARLAMA A.Ş.**
**Balmumcu Cad. Karahasan Sok.**
**No: 11, 34349– Balmumcu**
**Beşiktaş – İstanbul**
**Tel: (0212) 355 53 00**