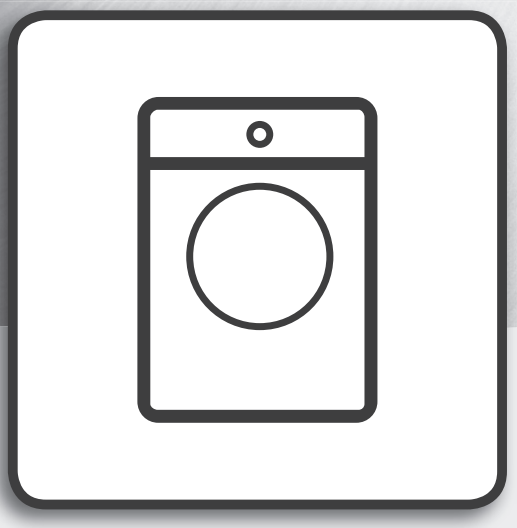

User Manual

www.hotpoint.eu/register

THANK YOU FOR PURCHASING A HOTPOINT PRODUCT.

To receive more comprehensive assistance, register the appliance on
www.hotpoint.eu/register

Before using the appliance carefully read the Health and Safety guide.

Before using the machine, it is imperative that the transport bolts are removed. For more detailed instructions on how to remove them, see the Installation Guide.

CONTROL PANEL

1. ON/OFF button
2. DRYING button
3. DRY ONLY button
4. MULTI RINSE button
5. OPTION button
6. DIRECT INJECTION button
7. START/PAUSE button and indicator light
8. KEY LOCK button
9. DELAY button
10. SPIN button
11. TEMPERATURE button
12. AUTO CLEAN button
13. WASH CYCLE SELECTOR KNOB
14. Programme Key

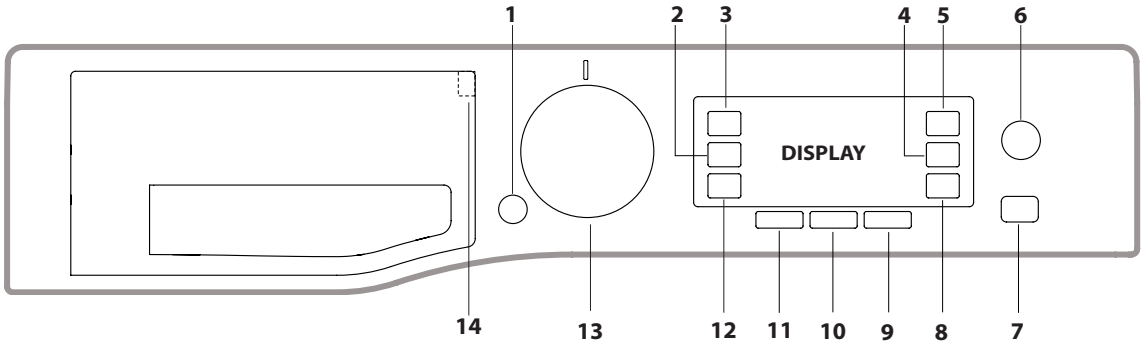

WASH CYCLE TABLE

Maximum load 10 kg
Power input in off mode 0.5 W / in left-on mode 8 W

	Wash cycle	Temperature Default	Temperature Range	Maximum spin (r.p.m.)	Max. load (kg)	Duration (Minutes)	Drying	Detergents and Additives: Wash 1	Detergents and Additives: Fabric softener 2	Recommended detergent: Powder	Recommended detergent: Liquid
1	**Daily Wash & Dry** (Daily Mix Wash & Dry)	40 °C	❄ - 40 °C	800	3,0	The duration of the wash cycles can be checked on the display.	●	●	○	–	✔
2	**Shirts Wash & Dry**	40 °C	❄ - 40 °C	1000	2,0		●	●	○	–	✔
3	**Pre Iron**	–	–	–	1,5		–	–	–	–	–
4	**Steam Refresh**	–	–	–	2,0		–	–	–	–	–
5	**Anti-Stain Turbo 45'** (Anti Stain Turbo 45')	20 °C	❄ - 40 °C	1200	5,5		●	●	○	–	✔
6	**Anti-Stain Power 20°C** (Anti Stain Power 20°C)	20 °C	❄ - 20 °C	1600	10,0		●	●	○	–	✔
7	**Cotton**	40 °C	❄ - 90 °C	1600	10,0		●	●	○	✔	✔
8	**Eco Cotton** 60'/40' **(1-2)**	60 °C	❄ - 60 °C	1600	10,0		●	●	○	✔	✔
9	**Synthetics (3)**	40 °C	❄ - 60 °C	1000	5,0		●	●	○	✔	✔
10	**Multicolour** (Multi Colour)	40 °C	❄ - 40 °C	1600	10,0		●	●	○	–	✔
11	**Ultradelicates** (Ultra Delicates)	30 °C	❄ - 30 °C	--	1,0		●	●	○	–	✔
12	**Wool**	40 °C	❄ - 40 °C	800	2,5		●	●	○	–	✔
13	**Sport**	40 °C	❄ - 40 °C	600	4,5		●	●	○	–	✔
14	**Fast** (Fast 30') **	30 °C	❄ - 30 °C	800	4,0		●	●	○	–	✔
	Rinse	–	–	1600	10,0		●	–	○	–	–
	Spin + Pump out *	–	–	1600	10,0		●	–	–	–	–

● Required dosage ○ Optional dosage

The cycle duration indicated on the display or instruction manual is an estimate based on standard conditions. The actual duration may vary in relation to several factors, such as the temperature and pressure of the incoming water, ambient temperature, amount of detergent, load quantity and type, load balancing and any additional options selected.

1) Test programme in compliance with standard EN 50229 (Wash):
This cycle is designed for normally soiled cotton loads and is the most efficient in terms of both electricity and water consumption; it should be used for garments washable at 60°C or at 40°C. The actual washing temperature may differ from the indicated value.

Test programme in compliance with standard EN 50229 (Drying): select the 8 wash programme and set the drying level to "EXTRA", for both loads. The first drying cycle must be carried out with the nominal load.

For all testing institutes:
2) Long cotton cycle: set programme 8 at temperature 40°C and press the DIRECT INJECTION button under "Power" mode.
3) Long synthetics cycle: set cycle 9 at a temperature of 40°C.

* By selecting the cycle and excluding the spin cycle, the washer-dryer will drain only.

** If a drying cycle is also programmed, the machine will run a "wash+dry" programme lasting 45' and a 1kg laundry load.

PRODUCT DESCRIPTION

1. Top
2. Detergent dispenser drawer
3. Control panel
4. Handle
5. Porthole door
6. Drain pump (behind the plinth)
7. Plinth (removable)
8. Adjustable feet (2)

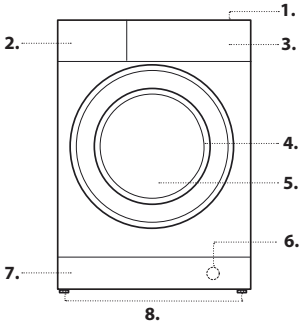

DETERGENT DISPENSER DRAWER

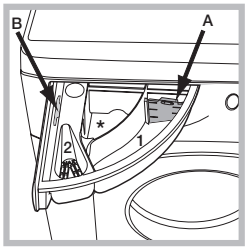

Compartment *:
Do not insert detergent in this compartment.
Compartment 1: Washing detergent (powder or liquid)
If liquid detergent is used, the removable plastic partition **A** (supplied) should be used for proper dosage.
If powder detergent is used, place the partition into slot **B**.
Compartment 2: Additives (fabric softeners, etc.)
The fabric softener must not exceed the "MAX" level.

! Use powder detergent for white cotton garments, for pre-washing, and for washing at temperatures over 60°C.
! Follow the instructions given on the detergent packaging.

! The "Programme key" situated inside the detergent dispenser shows all the available wash cycles together with a graphic guide on how to use the individual dispenser compartments.

WASH CYCLES

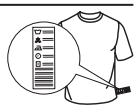

Follow the instructions on the symbols of the garment's wash care label. The value indicated in the symbol is the maximum recommended temperature for washing the garment.

Daily Wash & Dry
use programme 1 to wash and dry mixed garments (cotton and synthetics). This cycle may be used to wash and dry loads of up to 3 kg; we recommend the use of liquid detergent.
The use of the steam in this programme is optimised to reduce the formation of creases on garments, making them easier to iron.

Shirts Wash & Dry
Use programme 2 to wash and dry shirts and T-shirts in different fabrics and colours to ensure maximum care. This cycle may be used to wash and dry loads of up to 2 kg. To achieve optimum results, use liquid detergent and pre-treat cuffs, collars and stains. The use of the steam in this programme is optimised to reduce the formation of creases on garments, making them easier to iron.

Pre Iron
Use this programme immediately before ironing; max. 1,5 kg load. The use of the steam in this programme is optimised to reduce the formation of creases on garments, making them easier to iron.

Steam Refresh
For refreshing garments, neutralised unpleasant odours and relaxing the fibres by delivering steam into the drum. The garments will be damp at the end of the cycle.

Anti-Stain Turbo 45'
This cycle is ideal for washing daily stains in 45'. It is ideal for mixed fabrics and coloured garments.

Anti-Stain Power 20°C
this programme ensures maximum stain removal capacity with no need for pre-treatment at low temperatures, preserving fabrics and colours.

Cotton
Suitable for washing towels, underwear, table cloths, etc. made of resistant linen and cotton that are moderately to heavily soiled.

Eco Cotton
Suitable for washing moderately soiled cotton garments. At 40°C and 60°C it is the standard cycle for washing cotton garments, and is the most efficient in terms of combined water and electricity consumption.

Synthetics
Suitable for washing moderately soiled garments made of synthetic fibres (e.g. polyester, polyacrylic, viscose, etc.) or mixed synthetic-cotton fibres.

Multicolour
for washing coloured cotton garments. This programme is optimised to keep colours bright even after repeated washing.

Ultradelicates
For washing very delicate garments. It is advisable to turn the garments inside out before washing them. For best results, use liquid detergent on delicate garments.
We recommend turning the garments inside out before washing and placing small items into the special bag for washing delicates. Use liquid detergent on delicate garments for best results.
When selecting an exclusively time-based drying function, a drying cycle is performed at the end of the wash cycle that is particularly delicate, thanks to light handling and appropriate temperature control of the water jet.
The recommended durations are:
1 kg of synthetic garments --> 165 min
1 kg of synthetic and cotton garments --> 180 min
1 kg of cotton garments --> 180 min
The degree of dryness depends on the load and fabric composition.

Wool - *Woolmark Apparel Care - Green:*
the wool wash cycle of this machine has been approved by The Woolmark Company for the washing of wool garments labelled as "hand wash" provided that the products are washed according to the instructions on the garment label and those issued by the manufacturer of this washer-dryer. (M1135)



Sport
for washing lightly soiled sports clothing (tracksuits, shorts, towels, etc.); for best results, we recommend not exceeding the maximum load indicated in the "Wash cycles Table". We recommend using liquid detergent, and adding the amount suitable for a half-load.

Fast
For washing lightly soiled garments in a short time. Not suitable for wool, silk and garments to be washed by hand.

Rinse
Designed for rinsing and spinning.

Spin + Pump out
Designed for spinning and draining the water.

DISPLAY

The display is useful when programming the machine and provides a great deal of information.

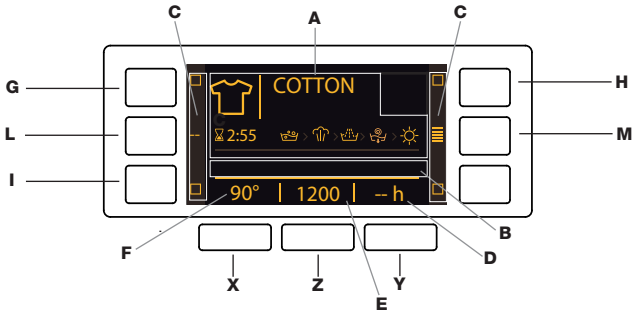

The following will appear in area **A**: the icon and programme selected, the washing and drying phases and time remaining to the end of the cycle.
Area **B** will include the two intensity levels relative to the DIRECT INJECTION option. The indicator lights relative to the available functions appear in area **C**. Area **D** will display the time remaining to the start of the selected cycle if the DELAY function was set.
Area **E** will display the maximum available spin speed on the basis of the set cycle; if the cycle does not include the spin cycle setting, the dimly lit "**--**" symbol will appear in the area.
Area **F** will show the temperature value that can be selected on the basis of the set cycle.
If the cycle does not include setting of the temperature, the dimly lit "**--**" symbol will appear in the area.
! To change the display luminosity, which by default is set to the highest value, switch the machine off then simultaneously press buttons **G**, **L** and **M** until the buzzer sounds.
Press buttons **X** and **Y** to choose the desired level of luminosity then confirm by pressing button **Z**.
! During the wash cycle or when the DELAY function has been enabled, if the user does not interact with the display for 1 minute the SCREEN SAVER activates. To return to the previous window, simply press any button.

Locked door indicator
When lit, the symbol indicates that the door is locked. To prevent any damage, wait until the symbol turns off before opening the door.
To open the door while a cycle is in progress, press the START/PAUSE button ▷II; if the 🔒 symbol is off, the door can be opened.

FIRST-TIME USE

Once the appliance has been installed, and before it is used for the first time, run a wash cycle with detergent and no laundry, by setting the "Auto Clean" cycle.

DAILY USE

Prepare the laundry by following the suggestions appearing under the "TIPS AND SUGGESTIONS" section.
- Press the ON/OFF button ⏻; "HOTPOINT" will appear on the display; the indicator light relative to the START/PAUSE ▷II button will flash slowly green.
- Open the door. Load the laundry while making sure not to exceed the maximum load quantity indicated in the wash cycle table.
- Pull out the detergent dispenser drawer and pour the detergent into the relevant compartments, as described in the "DETERGENT DISPENSER DRAWER" section.
- Close the door.
- Use the WASH CYCLE selector knob to select the desired wash cycle: the cycle's name will appear on the display; the cycle will be associated with a specific temperature and spin speed which can be modified. The duration of the cycle will appear on the display.
- Modify the temperature and/or spin speed: the machine automatically selects the maximum temperature and spin speed set for the selected wash cycle; these values cannot therefore be increased. Pressing the 🌡 button gradually reduces the temperature down to the cold wash setting (the "**--**" symbol will appear on the display). Pressing the 🌀 button gradually reduces the spin speed until it is completely excluded (the "**--**" symbol will appear on the display). Pressing the buttons further restores the maximum allowed values for the selected cycle.
- Select the desired options.
- Press the START/PAUSE ▷II button to start the wash cycle; the relative indicator light will light up steady green and the door will lock (🔒 symbol on).

PAUSING A CYCLE

To pause the wash cycle, press the START/PAUSE ▷II button again; the indicator light will flash amber. To start the wash cycle from the point at which it was interrupted, press the START/PAUSE ▷II button again.

ADDITIONAL GARMENTS

An icon on the display will signal when additional garments can be introduced into the washing machine, without decreasing the washing performance.
To add garments, first stop the washing machine by pressing the START/PAUSE ▷II button then open the door and insert them.
Press the START/PAUSE ▷II button again to restart the wash cycle from the point at which it was interrupted.

CHANGING A RUNNING WASH CYCLE

To change a wash cycle while it is in progress, pause the washing machine using the START/PAUSE ▷II button (the relative indicator light will flash amber), then select the desired cycle and press the START/PAUSE ▷II button again.

! To cancel a cycle that has already begun, press and hold the ON/OFF button. The cycle will be stopped and the machine will switch off.

AT THE END OF THE WASH CYCLE

This will be indicated by the word "CYCLE END" on the display; when the symbol switches off, the door may be opened. Open the door, unload the laundry and switch off the machine. If you do not press ON/OFF button, the washing machine will switch off automatically after about a half of an hour.

OPTIONS

- If the selected function is incompatible with the set wash cycle, the relevant indicator light will appear dimly lit; the incompatibility will also be signalled by a buzzer (3 beeps) and the wording "**Not Selection**" will appear on the display.
- If the selected function is incompatible with another previously set function, the wording "**Not Selection**" will appear on the display and the function will not be enabled.

Steam
This option enhances washing performance by generating steam during the wash cycle to remove any bacteria from the fibres, which are treated at the same time. Place the laundry in the drum, choose a compatible programme and select option .
! The steam generated during the operation of the washer-dryer may cause the porthole door to become hazy.

Delay
To set a delayed start for the selected cycle, press the corresponding button repeatedly until the desired delay period is reached. To remove the delayed start setting, press the button until "**-- h**" appears on the display.

Temperature
Each wash cycle has a pre-defined temperature. To modify the temperature, press the button. The value will appear on the display.

Spin
Each wash cycle has a pre-defined spin speed. To modify the spin speed, press the button. The value will appear on the display.

Direct Injection
The washer-dryer is equipped with the innovative technology «Direct Injection» which pre-mixes water and detergent, thus immediately activating the detergent's cleaning principles. This active emulsion is directly introduced into the drum of the washer-dryer and penetrates the fibres with more efficacy in cleaning even heavily soiled garments at low temperatures, fully preserving colours and fabrics.
The mode «Power» ensures the best cleaning performance and the mode «EcoEnergy» allows more energy saving.

Drying
The desired drying cycle type may be set by pressing the DRYING button once or several times. Two options are available:
A - Based on the how damp the clothes are once they have been dried:
Iron: suitable for clothes which will need ironing afterwards. the remaining dampness softens creases, making them easier to remove.
Hanger: ideal for clothes which do not need to be dried fully.
Cupboard: suitable for laundry which can be put back in a cupboard without being ironed.
Extra: suitable for garments which need to be dried completely, such as sponges and bathrobes.
B - Based on a set time period: between **30** and **180** minutes.
To exclude the drying phase press the relevant button until the text OFF appears on the display.
If your laundry load to be washed and dried is much greater than the maximum stated load, perform the wash cycle, and when the cycle is complete, divide the garments into groups and put some of them back in the drum. At this point, follow the instructions provided for a "**Dry only**" cycle. Repeat this procedure for the remainder of the load. A cooling-down period is always added to the end of each drying cycle.

Dry only
Press button to perform the drying-only cycle.
After selecting the desired cycle (compatible with the type of garments), press button to exclude the washing phase and start the drying phase at the maximum level for the selected cycle. The drying level or time may be set and changed by pressing the drying button .

Multi Rinse
This option allows for selecting the desired rinse type to protect sensitive skin. Press the button once to set level "**Extra +1**", which allows for selecting an additional rinse to the standard cycle rinses and removing all traces of detergent. Press the button again to set level "**Extra +2**", which allows for selecting two additional rinses to the standard cycle rinses; this cycle is recommended for very sensitive skin. When the button is pressed for the third time, the "**Extra +3**" level is set, which allows for selecting 3 additional rinses to the standard cycle rinses. When started with cycles at a temperature of 40°C, this option makes it possible to remove major allergens such as pollen and cat or dog hair. With cycles running at temperatures higher than 40°C, an excellent level of anti-allergy protection is achieved. Press the button again to return to the "**Normal Rinse**" mode. If the current mode cannot be set nor changed, the display will show "**Not Selection**" or "**Not Change**".

KEY LOCK

To activate the control panel lock, press and hold the button for roughly 2 seconds. When the display visualises "KEY LOCK ON", the control panel is locked (except for the ON/OFF button). This will prevent accidental modifications to wash cycles, especially when children are at home. To deactivate the control panel lock, press and hold the button for approximately 2 seconds.

TIPS AND SUGGESTIONS

Divide the laundry according to:
Type of fabric (cotton, mixed fibres, synthetics, wool, garments to be hand-washed). Colour (separate coloured garments from whites, wash new coloured garments separately). Delicates (small garments – such as nylon stockings – and items with hooks – such as bras: insert them in a fabric bag).
Empty the pockets:
Objects such as coins or lighters can damage the washer-dryer and the drum. Check all buttons.

CARE AND MAINTENANCE

Before performing cleaning and maintenance, switch the washer-dryer off and disconnect it from the mains power. Do not use flammable liquids to clean the washer-dryer.

Cutting off the water and electricity supplies
Turn off the water tap after every wash cycle. This will limit wear on the hydraulic system inside the washer-dryer and help to prevent leaks.
Unplug the washer-dryer when cleaning it and during all maintenance work.

Cleaning the washer-dryer
The outer parts and rubber components of the appliance can be cleaned using a soft cloth soaked in lukewarm soapy water. Do not use solvents or abrasives.
The washer-dryer has a "Auto Clean" cycle for its internal parts; it must be run without any load in the drum.
To help the wash cycle you may want to use either the detergent (i.e. a quantity 10% the quantity specified for lightly-soiled garments) or special additives to clean the washer-dryer. We recommend running a cleaning programme every 40 wash cycles.
To activate the cycle, press the button for 5 seconds then press START/PAUSE to start the cycle, which will last roughly 70 minutes.

Cleaning the detergent dispenser drawer
Remove the dispenser drawer by lifting and pulling it outwards. Wash it under running water; this procedure should be effected regularly.

Caring for the door and drum
Always leave the porthole door ajar in order to prevent unpleasant odours from forming.

Cleaning the pump
The washer-dryer is fitted with a Auto Clean pump which does not require any maintenance. Small items (such as coins or buttons) may sometimes fall into the protective pre-chamber situated at the base of the pump.
! Make sure that the wash cycle has ended and unplug the appliance.
To access the pre-chamber:
1. remove the covering panel on the front side of the machine by inserting a screwdriver in the centre and sides of the panel and using it as a lever;
2. loosen the drainage pump cover by turning it anti-clockwise: it is normal for some water to leak out;
3. clean the inside thoroughly;
4. screw the cover back on;
5. put the panel back in place, making sure the hooks slot in place before pushing the panel onto the appliance.

Checking the water inlet hose
Check the inlet hose at least once a year. If it is cracked or broken, it must be replaced: during wash cycles, the high pressure of the water could suddenly split the hose open.
! Never use hoses that have already been used.

LOAD BALANCING SYSTEM

Before every spin cycle, to avoid excessive vibrations before every spin and to distribute the load in a uniform manner, the drum rotates continuously at a speed which is slightly greater than the washing rotation speed. If, after several attempts, the load is not balanced correctly, the machine spins at a reduced spin speed. If the load is excessively unbalanced, the washing machine performs the distribution process instead of spinning. To encourage improved load distribution and balance, we recommend small and large garments are mixed in the load.

ACCESSORIES

Contact our Technical Assistance Service to check whether the following accessories are available for this washer-dryer model.

Stacking kit
With this accessory you can secure the tumble dryer to the upper part of your washer-dryer to save space and facilitate loading and unloading of the tumble dryer.

TRANSPORT AND HANDLING

Do not lift the washer-dryer by gripping it from the upper section.
Unplug the appliance and close the water tap. Check that the door and detergent dispenser drawer are tightly closed. Detach the filling hose from the water tap then detach the drain hose. Empty all the water remaining in the hoses and secure the latter so that they do not get damaged during transport. Apply the transport bolts back on. Repeat, in reverse order, the transport bolt removal procedure described in the "Installation instructions".

Important: Not emptying contents from pockets may cause pump or drain blockages, or may damage the machine.

Do not wash items which do not have a wash label, or wash items that are not intended as machine washable.

DEMO MODE: to deactivate this function, switch the washing machine OFF. Than press and hold "Start/Pause" button, within 5 seconds press also "ON/OFF" button and hold both buttons for 2 seconds.

TROUBLESHOOTING

Your machine could occasionally fail to work. Before contacting the Technical Assistance Service, make sure that the problem cannot be easily solved using the following list.

Anomalies	Possible causes / Solution
The machine does not switch on.	The appliance is not plugged into the socket fully, or not enough to make contact.
	There is no power to the socket, or the fuse has blown in the mains plug.
The wash cycle does not start.	The door is not closed properly.
	The ON/OFF ⏻ button has not been pressed.
	The START/PAUSE ▷II button has not been pressed.
	The water tap has not been turned on to allow water to flow into the machine.
	A delayed start has been set.
The washing machine does not fill with water ("NO WATER, turn tap on" appears on the display).	The water inlet hose is kinked.
	The water inlet hose is not connected to the water supply.
	The water pressure is too low.
	The water tap has not been turned on to allow water to flow into the machine.
	There is no water supply to the house.
	The inlet valve filter is blocked.
	The START/PAUSE ▷II button has not been pressed.
The machine continuously fills with water and continually drains away or Water left in the drum or Stuck on wash.	The top of the drain hose is too low - It must be fitted at a height between 65 and 100 cm from the floor.
	The drain hose is connected incorrectly to the sink trap allowing water to run into the machine, the drain hose must be positioned higher than the bottom of the sink to prevent water flowing down the drain hose.
	The end of the drain hose has been pushed too far down the standpipe, the 'U' bracket should be fitted 100 mm from the end of the drain hose.
The machine does not drain or spin - (error lights flashing).	The Pump filter is blocked.
	The drain hose is kinked.
	New Installation - The blanking cap or spigot has not been removed if connected under a sink.
	The drain hose or sink trap is blocked.
The machine does spin.	The 'Spin' Speed is set to "**--**".
The machine does not heat or poor wash results.	The 'Temperature' is set to "**--**".
The programme takes too long.	Programme times will vary due to water pressure, the incoming water temperature and if the wash load goes out of balance. This will increase the programme times accordingly.
The Display sticks at one 'time to end' for more than 1 Minute or the Display changes the estimated 'Time to End' during the programme.	The display time is for guidance only - it is not a precise time to finish and may vary.
The washing machine vibrates a lot during the spin cycle.	The feet have not been adjusted, enabling the machine to rock.
	New Installation - Either the Transit Bolts including the plastic spacers, or the Polystyrene Packaging have not been removed when installing the machine.
	The machine is trapped between cabinets and/or walls.
	The load is in a slight out of balance condition and machine is spinning, but at a lower speed.
The machine is noisy.	There will always be some motor, pump and drum noise during spin.
The machine leaks from the dispenser.	The dispenser drawer is blocked with detergent and requires cleaning.
	The water pressure is too high and requires turning down - turn down the tap on the water supply pipe slightly and try again.
	The machine is tilting forwards - It must be level when in its final position.
The "Options" and START/PAUSE ▷II indicator lights flash rapidly and the display visualises an error code (e.g.: F-01, F-...).	Switch off the machine and unplug it, wait for approximately 1 minute and then switch back on again. If the problem persists contact Technical Assistance Centre.
The machine smells.	The machine requires a service wash. Run a auto clean wash cycle with detergent and no laundry.
The water level is too low when the machine is washing.	The water level is correct if it can be seen at the bottom of the door.
There is too much foam.	The detergent is not suitable for machine washing (it should display the text 'for washing machines' or 'hand and machine wash' or the like).
General.	Your washing machine contains sensors that monitor progress during the wash cycle (eg: Water Levels, Temperatures, Out of Balance loads, Wash time/progress). Normally, if your machine successfully completes the cycle, there is unlikely to be anything wrong!
The washer-dryer does not dry.	The appliance is not plugged into the socket, or not enough to make contact.
	There has been a power failure.
	The appliance door is not shut properly.
	A Delay Timer has been set.
	DRYING is in the OFF position.

CLEANING & MAINTENANCE

For any cleaning and maintenance, switch off and unplug the washing machine.
Do not use flammable fluids to clean the washing machine.

CLEANING THE OUTSIDE OF THE WASHING MACHINE

Use a soft damp cloth to clean the outer parts of the washing machine.

Do not use glass or general purpose cleaners, scouring powder or similar to clean the control panel – these substances might damage the printing.

CHECKING THE WATER SUPPLY HOSE

Check the inlet hose regularly for brittleness and cracks. If damaged, replace it by a new hose available through our After-Sales Service or your specialist dealer.
Depending on the hose type:

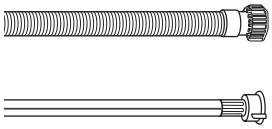

If the inlet hose has a transparent coating, periodically check if the colour intensifies locally. If yes, the hose may have a leak and should be replaced.

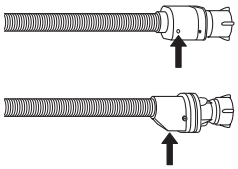

For water stop hoses: check the small safety valve inspection window (see arrow). If it is red, the water stop function was triggered, and the hose must be replaced by a new one.
For unscrewing this hose, press the release button (if available) while unscrewing the hose.

CLEANING THE MESH FILTERS IN THE WATER SUPPLY HOSE

1. Close water tap and unscrew the inlet hose.

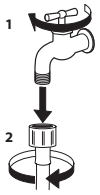

2. Clean the mesh filter at the hose's end carefully with a fine brush.

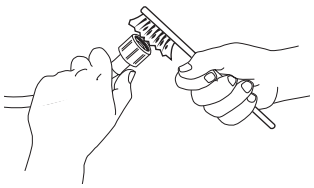

3. Now unscrew the inlet hose on the back of the washing machine by hand. Pull out the mesh filter from the valve on the back of the washing machine with pliers and carefully clean it.

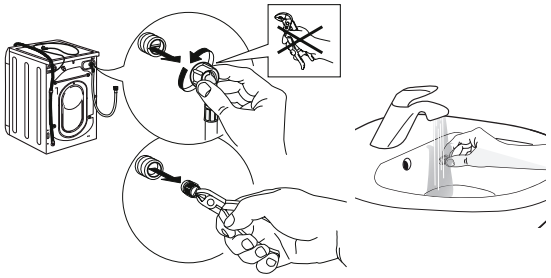

4. Insert the mesh filter again. Connect the inlet hose to water tap and washing machine again. Do not use a tool to connect the inlet hose. Open the water tap and check that all connections are tight.

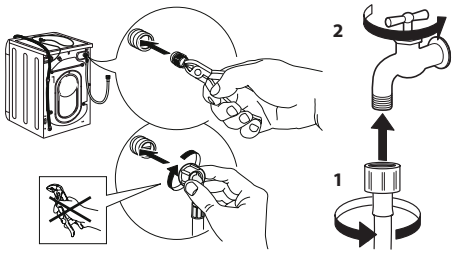

CLEANING THE DETERGENT DISPENSER

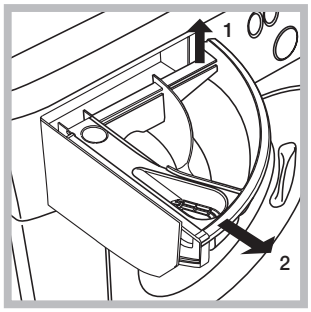

Remove the dispenser by raising it and pulling it out (see figure).
Wash it under running water; this operation should be repeated frequently.

CLEANING THE WATER FILTER / DRAINING RESIDUAL WATER

Switch off and unplug the washing machine before cleaning the water filter or draining residual water. If you used a hot wash programme, wait until the water has cooled down before draining any water.
Clean the water filter regularly, to avoid that the water cannot drain after the wash due to obstruction of the filter.
If the water cannot drain, the display indicates that the water filter may be clogged.

1. Remove the kick panel: Using a screwdriver, do that which is shown in the following figure.

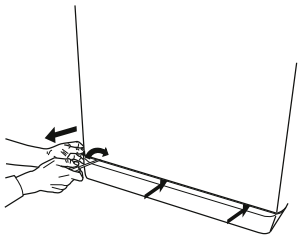

2. Container for the drained water:
Place a low and wide container under the water filter in order to collect the residual water.

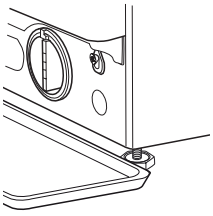

3. Drain the water:
Slowly turn the filter counter-clockwise until all the water has come out. Allow the water to flow out without removing the filter. Once the container is full, close the water filter by turning it clockwise. Empty the container. Repeat the procedure until all the water has been drained.

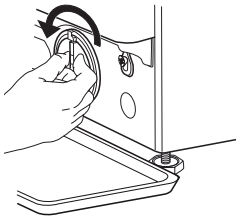

4. Remove filter: Lay a cotton cloth beneath the water filter, which can absorb a small amount of rest water. Then remove the water filter by turning it out anticlockwise.

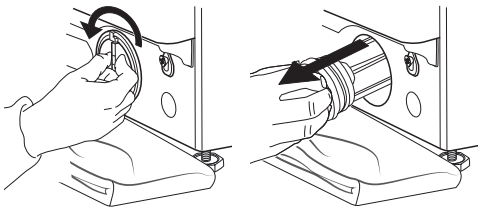

5. Clean the water filter: remove residues in the filter and clean it under running water.

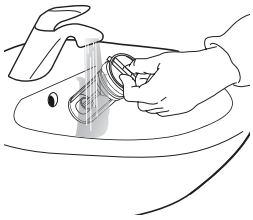

6. Insert the water filter and reinstall the plinth: Reinsert the water filter again by turning it in clockwise direction. Make sure to turn it in as far as it goes; the filter handle must be in vertical position. To test water tightness of the water filter, you can pour about 1 liter of water into the detergent dispenser. Then reinstall the plinth.

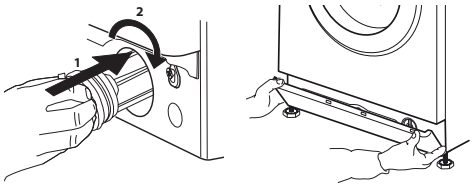

TRANSPORT AND HANDLING

Never lift the washing machine by holding it at the worktop.

1. Pull out the mains plug, and close the water tap.
2. Make sure that door and detergent dispenser are properly closed.
3. Disconnect the inlet hose from the water tap, and remove the drain hose from your draining point. Remove all rest water from the hoses, and fix them so that they cannot get damaged during transport.
4. Refit the transport bolts. Follow the instructions for removing the transport bolts in the “Installation Guide” in reverse order.

Important: Do not transport the washing machine without having fixed the transport bolts.

AFTER-SALES SERVICE

BEFORE CALLING THE AFTER-SALES SERVICE

1. See if you can solve the problem by yourself with the help of the suggestions given in the **TROUBLESHOOTING**
2. Switch the appliance off and back on again to see if the fault persists.

IF AFTER THE ABOVE CHECKS THE FAULT STILL OCCURS, GET IN TOUCH WITH THE NEAREST AFTER-SALES SERVICE

To receive assistance, call the number shown on the warranty booklet or follow the instructions on the website
website www.hotpoint.eu

When contacting our Client After sales service, always specify:
- a brief description of the fault;
- the type and exact model of the appliance;

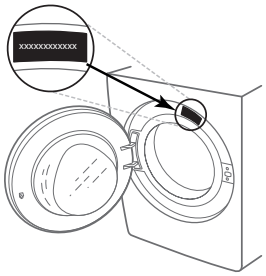

- the service number (number after the word Service on the rating plate).



- your full address;
- your telephone number.

If any repairs are required, please contact an authorised after-sales service (to guarantee that original spare parts will be used and repairs carried out correctly).

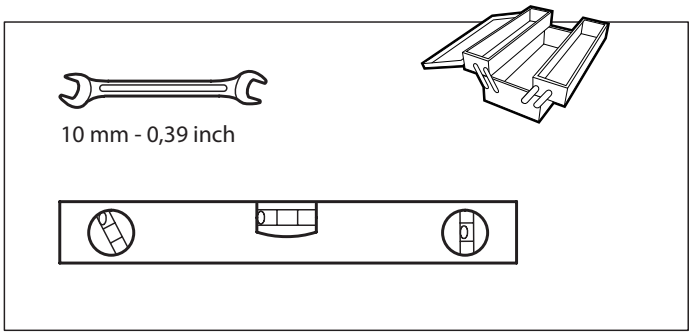

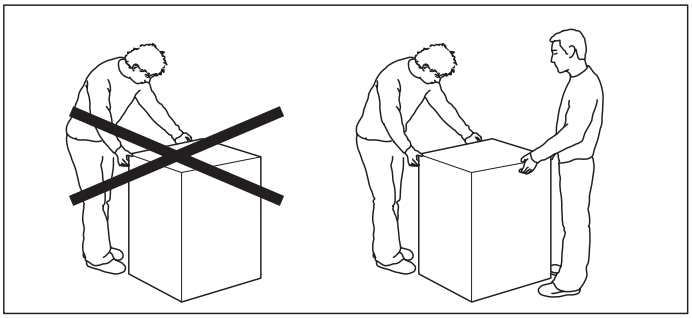

1.

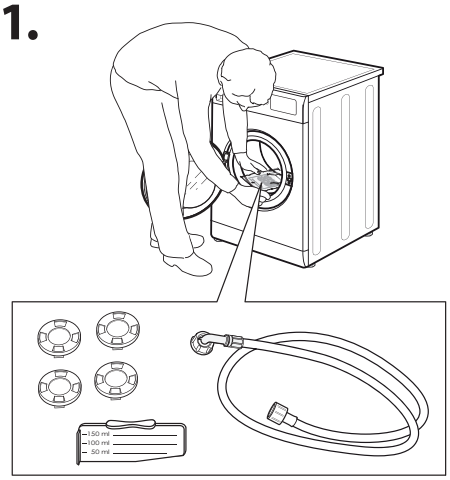

2.

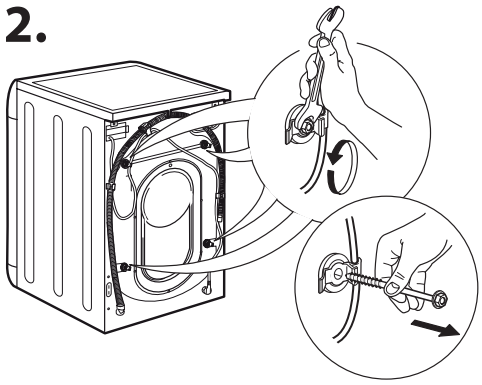

3.

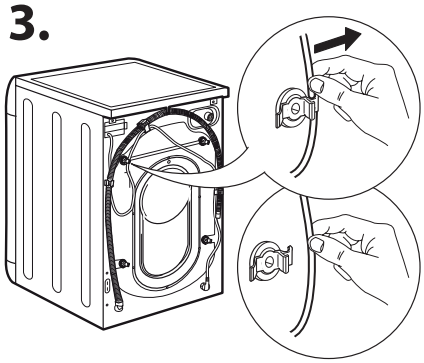

4.

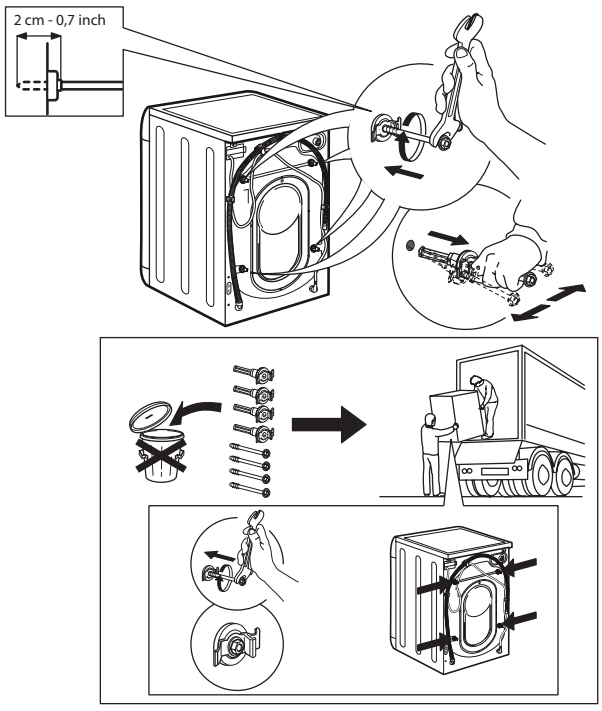

5.

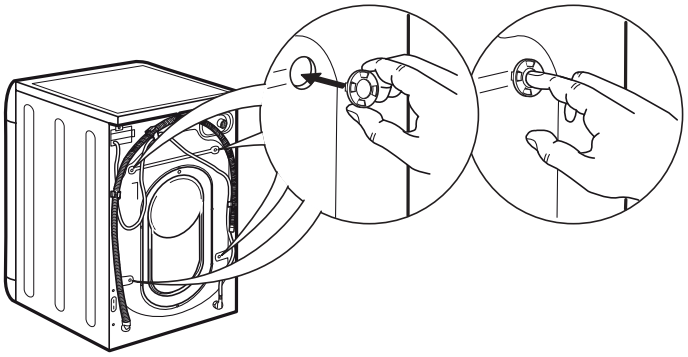

6.

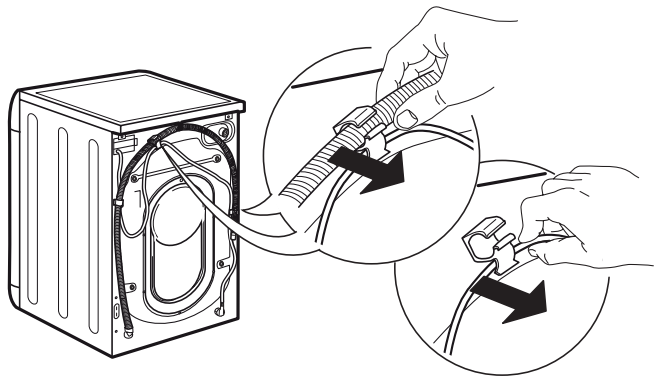

7.

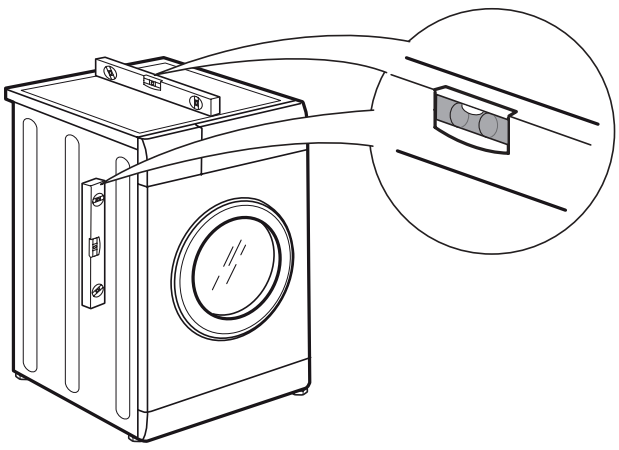

8.

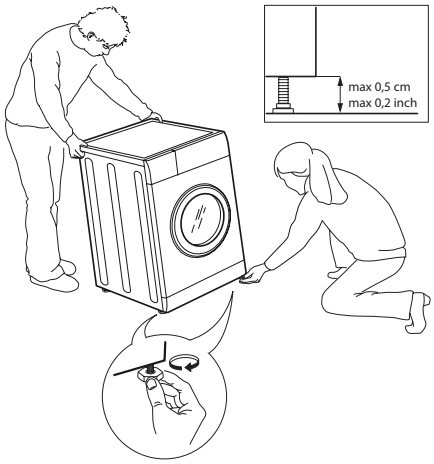

9.

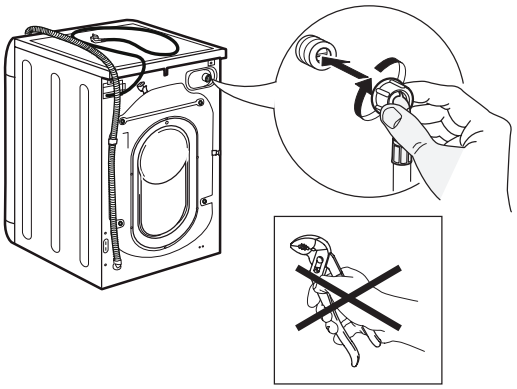

10.

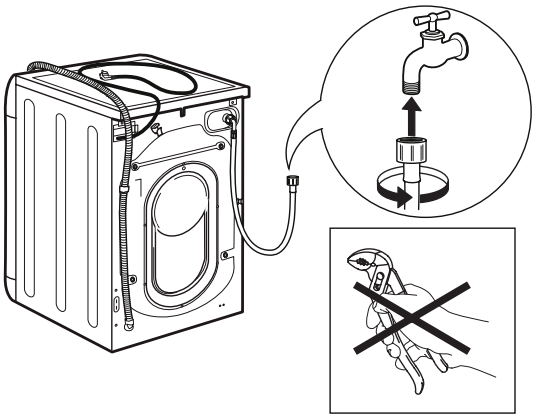

11.

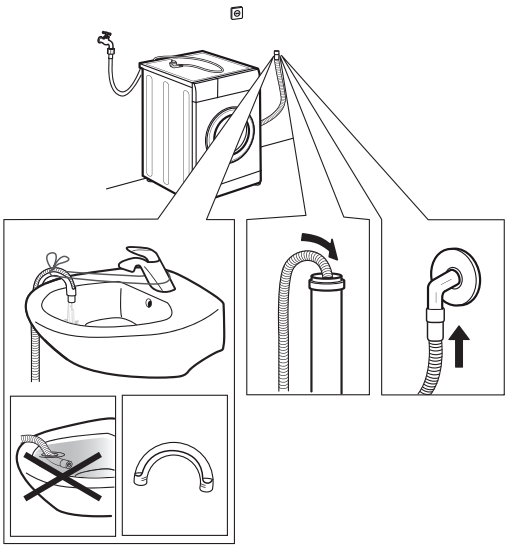

12.

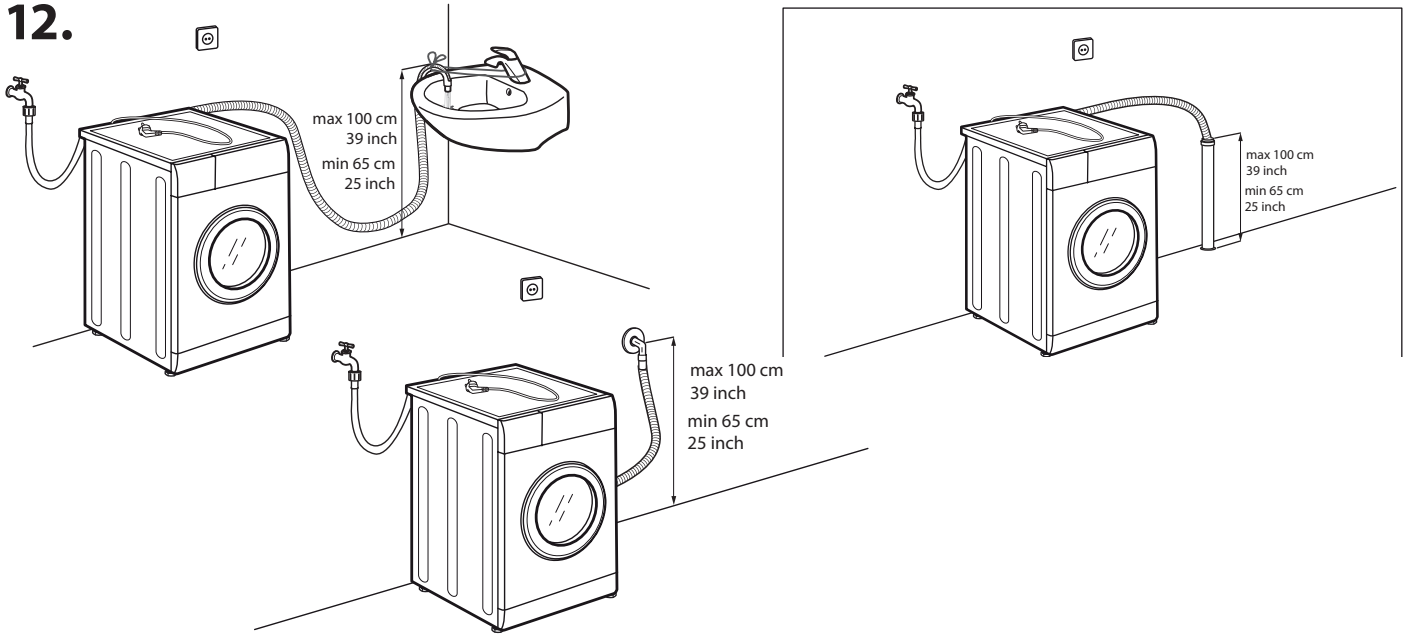

13.

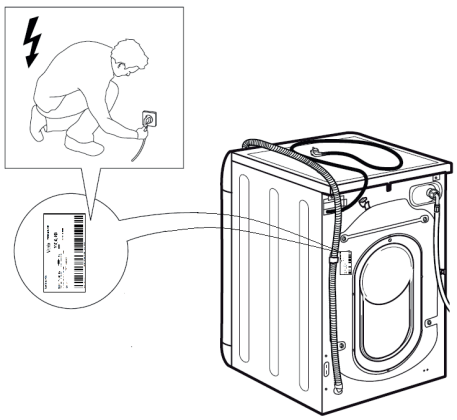

14.

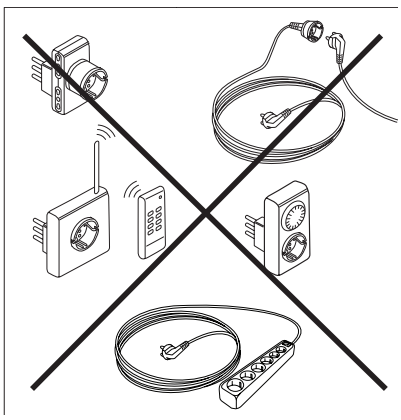

SAFETY INSTRUCTIONS

IMPORTANT TO BE READ AND OBSERVE

Before using the appliance, read these safety instructions. Keep them nearby for future reference. These instructions and the appliance itself provide important safety warnings, to be observed at all times.
The manufacturer declines any liability for failure to observe these safety instructions, for inappropriate use of the appliance or incorrect setting of controls.
⚠ Very young children (0-3 years) should be kept away from the appliance. Young children (3-8 years) should be kept away from the appliance unless continuously supervised. Children from 8 years old and above and persons with reduced physical, sensory or mental capabilities or lack of experience and knowledge can use this appliance only if they are supervised or have been given instructions on safe use and understand the hazards involved. Children must not play with the appliance. Cleaning and user maintenance must not be carried out by children without supervision. Never open the door forcibly or use it as a step.

PERMITTED USE

⚠ **CAUTION:** The appliance is not intended to be operated by means of an external switching device, such as a timer, or separate remote controlled system.
⚠ This appliance is intended to be used in household and similar applications such as: staff kitchen areas in shops, offices and other working environments; farm houses; by clients in hotels, motels, bed & breakfast and other residential environments.
⚠ Do not load the machine above the maximum capacity (kg of dry cloth) indicated in the programme table.
⚠ This appliance is not for professional use. Do not use the appliance outdoors.
⚠ Do not use any solvents (e.g. turpentine, benzene), detergents containing solvents, scouring powder, glass or general purpose cleaners, or flammable fluids; do not machine wash fabrics that have been treated with solvents or flammable liquids.
⚠ Do not dry unwashed items in the tumble dryer.
⚠ Items that have been soiled with substances such as cooking oil, acetone, alcohol, petrol, kerosene, spot removers, turpentine, waxes and wax removers should be washed in hot water with an extra amount of detergent before being dried in the tumble dryer.
⚠ Items such as foam rubber (latex foam), shower caps, waterproof textiles, rubber backed articles and clothes or pillows fitted with foam rubber pads should not be dried in the tumble dryer.
⚠ Fabric softeners, or similar products, should be used as specified by the fabric softener instructions.
⚠ The final part of a tumble dryer cycle occurs without heat (cool down cycle) to ensure that the items are left at a temperature that ensures that the items will not be damaged.
⚠ Never stop a tumble dryer before the end of the drying cycle unless all items are quickly removed and spread out so that the heat is dissipated.
⚠ During the drying phase, the door tends to get quite hot.
⚠ Do not use the appliance to dry clothes that have been washed with flammable solvents (e.g. trichlorethylene).
⚠ Do not use the appliance to dry foam rubber or similar elastomers.
⚠ Make sure that the water tap is turned on during the drying cycles.
⚠ Remove all objects from pockets such as lighters and matches.

INSTALLATION

⚠ The appliance must be handled and installed by two or more persons - risk of injury. Use protective gloves to unpack and install - risk of cuts.
If you want to stack a dryer on top of your washing machine, first contact our After-Sales Service or your specialist dealer to verify whether this is possible. This is only possible if the dryer is attached to the washing machine by means of appropriate stacking kit available through our After- Sales Service or your specialist dealer.
⚠ Move the appliance without lifting it by the worktop or top lid.
⚠ Installation, including water supply (if any) and electrical connections and repairs must be carried out by a qualified technician. Do not repair or replace any part of the appliance unless specifically stated in the user manual. Keep children away from the installation site. After unpacking the appliance, make sure that it has not been damaged during transport. In the event of problems, contact the dealer or your nearest After-sales Service. Once installed, packaging waste (plastic, styrofoam parts etc.) must be stored out of reach of children - risk of suffocation. The appliance must be disconnected from the power supply before any installation operation - risk of electric shock. During installation, make sure the appliance does not damage the power cable - risk of fire or electric shock. Only activate the appliance when the installation has been completed.

⚠ Do not install your appliance where it may be exposed to extreme conditions, such as: poor ventilation, temperatures below 5 °C or above 35 °C.
⚠ When installing the appliance make sure that the four feet are stable and resting on the floor, adjusting them as required, and check that the appliance is perfectly to level using a spirit level.
⚠ If the appliance is being installed on wood or "floating" floors (certain parquet and laminate materials), secure a 60 x 60 x 3 cm (at least) sheet of plywood to the floor then place the appliance on top of this.
⚠ Connect the water inlet hose(s) to the water supply in accordance with the regulations of your local water company.
⚠ For cold fill only models: do not connect to the hot water supply.
⚠ For models with hot fill: the hot water inlet temperature must not exceed 60 °C.
⚠ The washing machine is fitted with transport bolts to prevent any possible damage to the interior during transport. Before using the machine, it is imperative that the transport bolts are removed. After their removal, cover the openings with the 4 enclosed plastic caps.
⚠ After installation of the device, wait a few hours before starting it so that it acclimates to the environmental conditions of the room.
⚠ Make sure that the ventilation openings in the base of your washing machine (if available on your model) are not obstructed by a carpet or other material.
⚠ Use only new hoses to connect the appliance to the water supply. The old hose-sets should not be reused.
⚠ The supply water pressure must be in the 0.1-1 Mpa range.

ELECTRICAL WARNINGS

⚠ It must be possible to disconnect the appliance from the power supply by unplugging it if plug is accessible, or by a multi-pole switch installed upstream of the socket in accordance with the wiring rules and the appliance must be earthed in conformity with national electrical safety standards.
⚠ Do not use extension leads, multiple sockets or adapters. The electrical components must not be accessible to the user after installation. Do not use the appliance when you are wet or barefoot. Do not operate this appliance if it has a damaged power cable or plug, if it is not working properly, or if it has been damaged or dropped.
⚠ If the supply cord is damaged, it must be replaced with an identical one by the manufacturer, its service agent or similarly qualified persons in order to avoid a hazard - risk of electric shock.

CLEANING AND MAINTENANCE

⚠ WARNING: Ensure that the appliance is switched off and disconnected from the power supply before performing any maintenance operation; never use steam cleaning equipment - risk of electric shock.

DISPOSAL OF PACKAGING MATERIALS

The packaging material is 100% recyclable and is marked with the recycle symbol ♻.
The various parts of the packaging must therefore be disposed of responsibly and in full compliance with local authority regulations governing waste disposal.

DISPOSAL OF HOUSEHOLD APPLIANCES

This appliance is manufactured with recyclable or reusable materials. Dispose of it in accordance with local waste disposal regulations. For further information on the treatment, recovery and recycling of household electrical appliances, contact your local authority, the collection service for household waste or the store where you purchased the appliance. This appliance is marked in compliance with European Directive 2012/19/EU, Waste Electrical and Electronic Equipment (WEEE). By ensuring this product is disposed of correctly, you will help prevent negative consequences for the environment and human health.

The symbol on the product or on the accompanying documentation indicates that it should not be treated as domestic waste but must be taken to an appropriate collection center for the recycling of electrical and electronic equipment.