PHPN9.5FLMX

12NC: F155748

GTIN (EAN) code: 5054645557486

Hotpoint



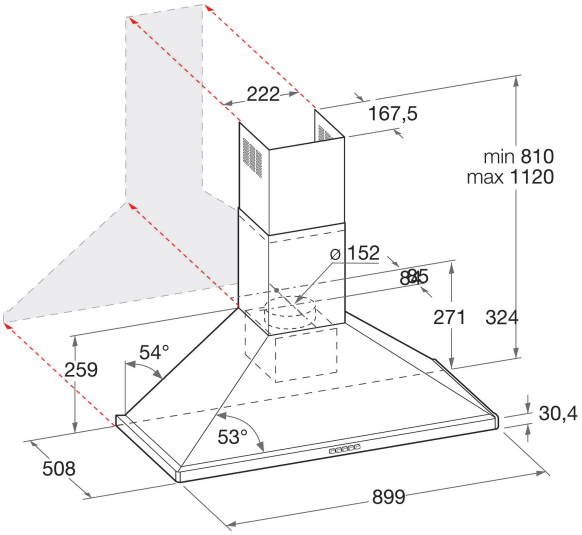

MAIN FEATURES

Product group	Hood
Colour body	Inox
Material body	Stainless steel
Colour chimney	Inox
Material chimney	Stainless steel
Typology	Wall-mounted
Installation type	Wall-mounted
Type of control	Mechanical
Type of control settings	-
Decor panel options	N/A
Motor location	Integrated motor in hood body
Operating Mode	Convertible
Electrical connection rating (W)	145
Current (A)	0,8
Voltage (V)	220-240
Frequency (Hz)	50/60
Length of Electrical Supply Cord (cm)	150
Plug type	No
Chimney height (mm)	-
Height of product, without chimney (mm)	0
Height of the product	1120
Width of the product	900
Depth of the product	509
Minimum niche height	0
Minimum niche width	0
Niche depth	0
Net weight (kg)	10.1

TECHNICAL FEATURES

Type of manual control devices	Buttons
Type of automatic control devices	-
Number of motors	1
Total power of the motors (W)	140
Number of speed settings: boost option availability	3
Boost presence	No
Maximum output air extraction (m^3/h)	416
Boost position air extraction (m^3/h)	0
Maximum output recirculating air (m^3/h)	0
Boost position output recirculating (m^3/h)	0
Light Control Type	On/Off
Number of lights	2
Type of lamps used	LED
Total power of the lamps (W)	5
Diameter of air outlet (mm)	150
No-return airflow flap	Yes
Grease filter material	Washable aluminium
Odour filter	Yes

PERFORMANCES

Sound power at min. speed (2010/30/EU)	53
Sound power at max. speed (2010/30/EU)	62
Noise level with boost position (dB(A) re 1 pW)	0