TI 60 X

12NC: F104339

GTIN (EAN) code: 8050147043394



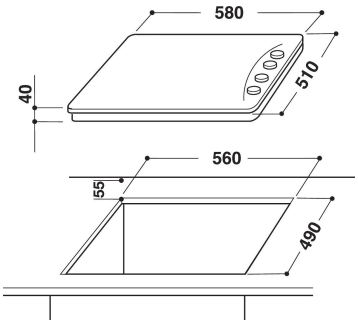

MAIN FEATURES

Product group	Hob
Construction type	Built-in
Type of control	Mechanical
Type of control settings	-
Number of gas burners	0
Number of electric cooking zones	4
Number of electric plates	4
Number of radiant plates	0
Number of halogen plates	0
Number of induction plates	0
Number of electric warming zones	0
Location of control panel	Lateral
Basic surface material	Inox
Main colour of product	Inox
Electrical connection rating (W)	5500
Gas connection rating (W)	0
Current (A)	23,9
Voltage (V)	230-240
Frequency (Hz)	50
Length of Electrical Supply Cord (cm)	0
Plug type	No
Gas connection	N/A
Width of the product	580
Height of the product	40
Depth of the product	510
Minimum niche height	20
Minimum niche width	558
Niche depth	490
Net weight (kg)	9.5
Automatic programmes	No

TECHNICAL FEATURES

Power on indicator	Yes
Number of indicators	1
Type of regulation	Cast iron plate rapid
Type of lid	Without
Residual heat indicator	Central
Main on/off switch	No
Safety device	-
Timer	No

PERFORMANCES

Energy input	Electric