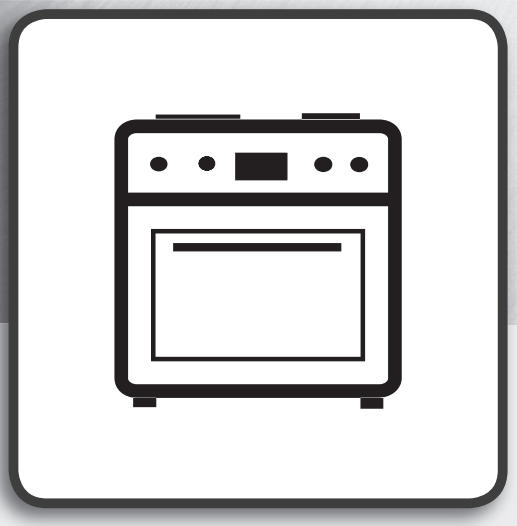

EN ENGLISH

Safety Instructions 2
Daily Reference Guide 4
Installation Guide 11

IS5E4KHW/UK

INDESIT

EN
SAFETY INSTRUCTIONS

IMPORTANT TO BE READ AND OBSERVED

Before using the appliance, read these safety instructions. Keep them nearby for future reference.

These instructions and the appliance itself provide important safety warnings, to be observed at all times. The manufacturer declines any liability for failure to observe these safety instructions, for inappropriate use of the appliance or incorrect setting of controls.

⚠ WARNING: The appliance and its accessible parts become hot during use. Care shoul be taken to avoid touching heating elements. Children less than 8 years of age must be kept away unless continuously supervised.

⚠ WARNING : If the hob surface is cracked, do not use the appliance – risk of electric shock.

⚠ WARNING : Danger of fire : Do not store items on the cooking surfaces.

⚠ CAUTION : The cooking process has to be supervised. A short cooking process has to be supervised continuously.

⚠ WARNING: Leaving the hob unattended when cooking with fat or oil can be dangerous – risk of fire. NEVER try to extinguish a fire with water, but switch off the appliance and then cover the flames e.g. with a lid or a fire blanket.

⚠ Do not use the hob as a work surface or support. Keep clothes or other flammable materials away from the appliance, unitl all the components have cooled down completely – risk of fire.

⚠ Very young children (0-3 years) should be kept away from the appliance. Young children (3-8 years) should be kept away from the appliance unless continuously supervised. Children from 8 years old and above and persons with reduced physical, sensory or mental capabilities or lack of experience and knowledge can use this appliance only if they are supervised or have been given instructions on safe use and understand the hazards involved. Children must not play with the appliance. Cleaning and user maintenance must not be carried out by children without supervision.

⚠ WARNING: The appliance and its accessible parts become hot during use. Care should be taken to avoid touching heating elements. Children less than 8 years of age must be kept away unless continuously supervised

⚠ Never leave the appliance unattended during food drying. If the appliance is suitable for probe usage, only use a temperature probe recommended for this oven - risk of fire.

⚠ Keep clothes or other flammable materials away from the appliance, until all the components have cooled down completely - risk of fire. Always be vigilant when cooking foods rich in fat, oil or when adding alcoholic beverages - risk of fire. Use oven gloves to remove pans and accessories. At the end of cooking, open the door with caution, allowing hot air or steam to escape gradually before accessing the cavity - risk of burns. Do not obstruct hot air vents at the front of the oven - risk of fire.

⚠ Exercise caution when the oven door is in the open or down position, to avoid hitting the door.

PERMITTED USE

⚠ CAUTION: The appliance is not intended to be operated by means of an external switching device, such as a timer, or separate remote controlled system.

⚠ This appliance is intended to be used in household and similar applications such as: staff kitchen areas in shops, offices and other working environments; farm houses; by clients in hotels, motels, bed & breakfast and other residential environments.

⚠ No other use is permitted (e.g. heating rooms).

⚠ This appliance is not for professional use. Do not use the appliance outdoors.

⚠ Do not store explosive or flammable substances (e.g. gasoline or aerosol cans) inside or near the appliance - risk of fire.

INSTALLATION

⚠ The appliance must be handled and installed by two or more persons - risk of injury. Use protective gloves to unpack and install - risk of cuts.

⚠ Installation, including water supply (if any), electrical connections and repairs must be carried out by a qualified technician. Do not repair or replace any part of the appliance unless specifically stated in the user manual. Keep children away from the installation site. After unpacking the appliance, make sure that it has not been damaged during transport. In the event of problems, contact the dealer or your nearest Aftersales Service. Once installed, packaging waste (plastic, styrofoam parts etc.) must be stored out of reach of children - risk of suffocation. The appliance must be disconnected from the power supply before any installation operation - risk of electric shock. During installation, make sure the appliance does not damage the power cable - risk of fire or electric shock. Only activate the appliance when the installation has been completed.

Do not remove the appliance from its polystyrene foam base until the time of installation.

⚠ Do not install the appliance behind a decorative door - risk of fire.



if the range is placed on a base, it must be leveled and fixed to the wall by the retention chain provided, to prevent the appliance slipping from the base.

WARNING: In order to prevent the appliance from tipping, the retention chain provided must be installed. Refer to the instructions for installation.

ELECTRICAL WARNINGS

⚠ The rating plate is on the front edge of the oven (visible when the door is open).

⚠ It must be possible to disconnect the appliance from the power supply by unplugging it if plug is accessible, or by a multi-pole switch installed upstream of the socket in accordance with the wiring rules and the appliance must be earthed in conformity with national electrical safety standards.

⚠ Do not use extension leads, multiple sockets or adapters. The electrical components must not be accessible to the user after installation. Do not use the appliance when you are wet or barefoot. Do not operate this appliance if it has a damaged power cable or plug, if it is not working properly, or if it has been damaged or dropped.

⚠ If the supply cord is damaged, it must be replaced with an identical one by the manufacturer, its service agent or similarly qualified persons in order to avoid a hazard - risk of electric shock.

⚠ If the power cable needs to be replaced, contact an authorized service center.

⚠ WARNING: Ensure that the appliance is switched off before replacing the lamp to avoid the possibility of electric shock.

CLEANING AND MAINTENANCE

⚠ WARNING: Ensure that the appliance is switched off and disconnected from the power supply before performing any maintenance operation; never use steam cleaning equipment - risk of electric shock.

⚠ Do not use harsh abrasive cleaners or metal scrapers to clean the door glass since they can scratch the surface, which may result in shattering of the glass.

⚠ Do not use abrasive or corrosive products, chlorine-based cleaners or pan scourers.

⚠ Make sure the appliance has cooled down before cleaning or performing maintenance. - risk of burns.

⚠ WARNING: Switch off the appliance before replacing the lamp - risk of electric shock.

DISPOSAL OF PACKAGING MATERIALS

The packaging material is 100% recyclable and is marked with the recycle symbol . The various parts of the packaging must therefore be disposed of responsibly and in full compliance with local authority regulations governing waste disposal.

DISPOSAL OF HOUSEHOLD APPLIANCES

This appliance is manufactured with recyclable or reusable materials. Dispose of it in accordance with local waste disposal regulations.



For further information on the treatment, recovery and recycling of household electrical appliances, contact your local authority, the collection service for household waste or the store where you purchased the appliance. This appliance is marked in compliance with European Directive 2012/19/EU, Waste Electrical and Electronic Equipment (WEEE). By ensuring this product is disposed of correctly, you will help prevent negative consequences for the environment and human health. The symbol on the product or on the accompanying documentation indicates that it should not be treated as domestic waste but must be taken to an appropriate collection centre for the recycling of electrical and electronic equipment.

ENERGY SAVING TIPS

Only preheat the oven if specified in the cooking table or your recipe. Use dark lacquered or enamelled baking trays as they absorb heat better.

DECLARATIONS OF CONFORMITY

This appliance meets Ecodesign requirements of European Regulation 66/2014 in compliance with the European standard EN 60350-1.

This appliance meets Ecodesign requirements of European Regulation 66/2014 in compliance with the European standard EN 60350-2.

DAILY REFERENCE GUIDE

Read the safety instructions carefully before using the product

PRODUCT DESCRIPTION

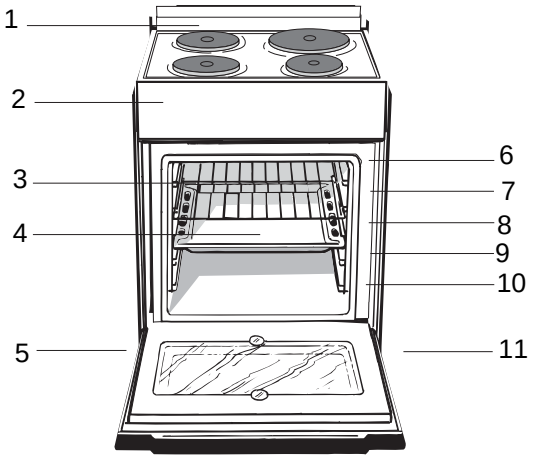

1. **Electric hob**
2. **Control panel**
3. **GRILL** rack
4. **DRIPPING PAN**
5. Adjustable **foot**

GUIDE RAILS
for the sliding racks

6. position 5
7. position 4
8. position 3
9. position 2
10. position 1
11. Adjustable **foot**

CONTROL PANEL

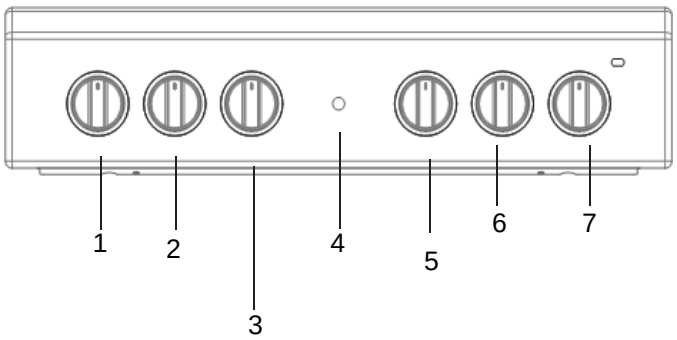

1. Hob **BURNER** control knobs
2. Hob **BURNER** control knobs
3. **THERMOSTAT** knob
4. **THERMOSTAT** indicator light
5. **SELECTOR** knob
6. Hob **BURNER** control knobs
7. Hob **BURNER** control knobs

START-UP AND USE

Using the oven

! The first time you use your appliance, heat the empty oven with its door closed at its maximum temperature for at least half an hour. Ensure that the room is well ventilated before switching the oven off and opening the oven door. The appliance may emit a slightly unpleasant odour caused by protective substances used during the manufacturing process burning away.

1. Select the desired cooking mode by turning the SELECTOR knob.
2. Select the recommended temperature for the cooking mode or the desired temperature by turning the THERMOSTAT knob.
A list detailing cooking modes and suggested cooking temperatures can be found in the relevant table (*see Oven cooking advice table*).

During cooking it is always possible to:
- Change the cooking mode by turning the SELECTOR knob.
- Change the temperature by turning the THERMOSTAT knob.
- Set the total cooking time and the cooking end time (*see below*).
- Stop cooking by turning the SELECTOR knob to the “0” position.

! Never put objects directly on the bottom of the oven; this will avoid the enamel coating being damaged.
! Always place cookware on the rack(s) provided.

THERMOSTAT indicator light

When this is illuminated, the oven is generating heat. It switches off when the inside of the oven reaches the selected temperature. At this point the light illuminates and switches off alternately, indicating that the thermostat is working and is maintaining the temperature at a constant level.

After installing the power cable, screw the metal cover with three screws.

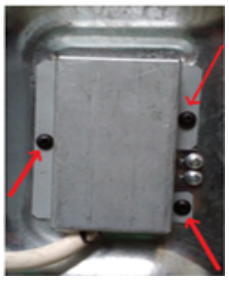

* Only available in certain models.

Oven light

This is switched on by turning the SELECTOR knob to any position other than “0”. It remains lit as long as the oven is operating. By selecting with the knob, the light is switched on without any of the heating elements being activated.

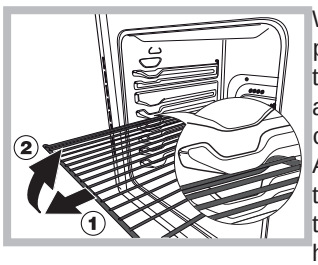

WARNING! The oven is provided with a stop system to extract the racks and prevent them from coming out of the oven.(1) As shown in the drawing, to extract them completely, simply lift the racks, holding them on the front part, and pull (2).

TABLE OF CHARACTERISTSICS	
ENERGY LABEL and ECODESIGN	Regulation (EU) No 65/2014 supplementing Directive 2010/30/EU. Regulation (EU) No 66/2014 implementing Directive 2009/125/EC. Standard EN 60350-1 Standard EN 50564. Standard EN 30-2-1 Energy consumption for Natural convection – heating mode: mode;

Cooking modes

! A temperature value can be set for all cooking modes between 50°C and MAX, except for the GRILL programme, for which only the MAX power level is recommended.

TRADITIONAL (CONVECTION) OVEN mode

Both the top and bottom heating elements will come on. When using this traditional cooking mode, it is best to use one cooking rack only. if more than one rack is used, the heat will be distributed unevenly.

OVEN BOTTOM (PASTRY) mode

The lower heating element is activated. This position is recommended for perfecting the cooking of dishes (in baking trays) which are already cooked on the surface but require further cooking in the centre, or for desserts with a covering of fruit or jam, which only require moderate colouring on the surface. It should be noted that this function does not allow the maximum temperature to be reached inside the oven (250°C) and it is therefore not recommended that foods are cooked using only this setting, unless you are baking cakes (which should be baked at a temperature of 180°C or lower).

OVEN TOP mode

The top heating element is activated. The extremely high and direct temperature of the grill makes it possible to brown the surface of meats and roasts while locking in the juices to keep them tender.

GRILL mode

The top heating element is activated. The grill is also highly recommended for dishes that require a high surface temperature: beef steaks, veal, rib steak, fillets, hamburgers etc...

Important: When using the grill, the oven door must be left partly open

ECO mode

For cooking stuffed roasting joints and fillets of meat on a single shelf. To use the ECO cycle and therefore optimize power consumption, the oven door should not be opened until the food is completely cooked.

Lower compartment

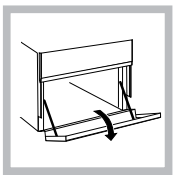

! Do not place flammable materials in the lower oven compartment.
! The internal surfaces of the compartment (where present) may become hot

Practical cooking advice

! In the GRILL cooking mode, place the dripping pan in position 1 to collect cooking residues (fat and/or grease).

GRILL

- Insert the rack in position 3 or 4. Place the food in the centre of the rack.
- We recommend that the power level is set to maximum. The top heating element is regulated by a thermostat and may not always operate constantly.

PIZZA

- Use a light aluminium pizza pan. Place it on the rack provided.
  For a crispy crust, do not use the dripping pan as it prevents the crust from forming by extending the total cooking time.
- If the pizza has a lot of toppings, we recommend adding the mozzarella cheese on top of the pizza halfway through the cooking process.

USING THE GLASS CERAMIC HOB

Practical advice on using the electric hotplates

To avoid heat loss and damage to the hotplates use pans with a flat base, whose diameter is no less than that of the hotplate itself.

! Before using the hotplates for the first time, you should heat them at maximum temperature for approximately 4 minutes, without placing any pans on them. During this initial stage, their protective coating hardens and reaches its maximum resistance.

Setting	Normal or Fast Plate
0	Off
1	Cooking vegetables, fish
2	Cooking potatoes (using steam) soups, chickpeas, beans.
3	Continuing the cooking of large quantities of food, minestrone
4	For roasting (average)
5	For roasting (above average)
6	For browning and reaching a boil in a short time.

Practical advice on using the hob

- Use pans with a thick, flat base to ensure that they adhere perfectly to the cooking zone.

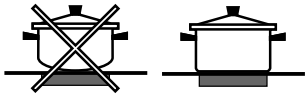

- Always use pans with a diameter that is large enough to cover the hotplate fully, in order to use all the heat produced.



- Always make sure that the base of the pan is completely clean and dry: this ensures that the pans adhere perfectly to the cooking zones and that both the pans and the hob remain effective for a longer period of time.
- Avoid using the same cookware that is used on gas burners: the heat concentration on gas burners may have warped the base of the pan, causing it not to adhere to the surface correctly.
- Never leave a cooking zone switched on without a pan on top of it, as doing so may cause the zone to become damaged.

COOKING ADIVCE TABLE FOR THE OVEN

Selector knob setting	Food to be cooked	Weight (in kg)	Cooking rack position from bottom	Preheating time (minutes)	Thermostat knob setting	Cooking time (minutes)
1 Convection (Traditional)	Duck	1	3	15	200	65-75
	Roast veal or beef	1	3	15	200	70-75
	Pork roast	1	3	15	200	70-80
	Biscuits (short pastry)	-	3	15	180	15-20
	Tarts	1	3	15	180	30-35
	Lasagne	1	3	10	190	35-40
	Lamb	1	2	10	180	50-60
	Mackerel	1	2	10	180	30-35
	Plum-cake	1	2	10	170	40-50
	Cream puffs	0.3	3	10	180	30-35
	Sponge-cake	0.5	3	10	170	20-25
	Savoury pies	1.5	3	15	200	30-35
2 Pastry Mode	Raised Cakes	0,5	3	15	160	30-40
	Tarts	1	3	15	180	35-40
	Fruit cakes	1	3	15	180	50-60
	Brioches	0,5	3	15	160	25-30
3 Top Oven	Browning food to perfect cooking	-	3/4	15	220	-
4 Grill	Soles and cuttlefish	1	4	5	180	8-10
	Squid and prawn kebabs	1	4	5	180	6-8
	Cod filet	1	4	5	180	10
	Grilled vegetables	1	3/4	5	180	10-15
	Veal steak	1	4	5	180	15-20
	Cutlets	1	4	5	180	15-20
	Hamburgers	1	4	5	180	7-10
	Mackerels	1	4	5	180	15-20
	Toasted sandwiches	n.° 4	4	5	180	2-3

NB: cooking times are approximate and may vary according to personal taste. When cooking using the grill, the dripping pan must always be placed on the 1st oven rack from the bottom.

Respecting and conserving the environment

- Whenever possible, avoid pre-heating the oven and always try to fill it. Open the oven door as little as possible because heat is lost every time it is opened. To save a substantial amount of energy, simply switch off the oven 5 to 10 minutes before the end of your planned cooking time and use the heat the oven continues to generate.
- Automatic programmes are based on standard food product.
- Keep gaskets clean and tidy to prevent any door energy losses
- If you have a timed tariff electricity contract, the “delay cooking” option will make it easier to save money by moving operation to cheaper time periods.
- Make the most of your hot plate's residual heat by switching off cast iron hot plates 10 minutes before the end of your cooking time and glass ceramic hot plates 5 minutes before the end of cooking time.
- The base of your pot or pan should cover the hot plate. If it is smaller, precious energy will be wasted and pots that boil over leave encrusted remains that can be difficult to remove.
- Cook your food in closed pots or pans with well-fitting lids and use as little water as possible. Cooking with the lid off will greatly increase energy consumption
- Use purely flat pots and pans
- If you are cooking something that takes a long time, it's worth using a pressure cooker, which is twice as fast and saves a third of the energy.

MAINTENANCE AND CLEANING

Switching the appliance off

Disconnect your appliance from the electricity supply before carrying out any work on it.

! Never use steam cleaners or pressure cleaners on the appliance.

Inspecting the oven seals

Check the door seals around the oven regularly. If the seals are damaged, please contact your nearest After-sales Service Centre. We recommend that the oven is not used until the seals have been replaced.

Replacing the oven light bulb

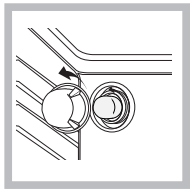

1. After disconnecting the oven from the electricity mains, remove the glass lid covering the lamp socket (*see figure*).
2. Remove the light bulb and replace it with a similar one: voltage 230 V, wattage 25 W, cap E 14.
3. Replace the lid and reconnect the oven to the electricity supply.

! Do not use the oven lamp as/for ambient lighting.

Cleaning stainless steel

Stainless steel can be marked by hard water that has been left on the surface for a long time, or by aggressive detergents that contain phosphorus. We recommend that the steel surfaces are rinsed well then dried thoroughly.

AFTER-SALES SERVICE

To receive assistance, call the number given on the warranty leaflet enclosed with the product or follow the instructions on our website. Be prepared to provide:

- a brief description of the problem;
- the exact model type of your product;
- the assistance code (the number following the word SERVICE on the identification plate attached to the product, which can be seen on the inside edge when the oven door is open);
- your full address;
- a contact telephone number.

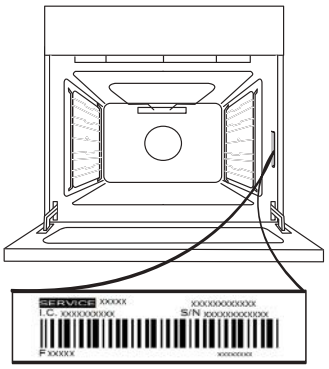

Please note: If repairs are required, contact an authorised service centre that is guaranteed to use original spare parts and perform repairs correctly.

Please refer to the enclosed warranty leaflet for more information on the warranty.

Assistance

Please have the following information to hand:

- The appliance model (Mod.).
- The serial number (S/N).

This information can be found on the data plate located on the appliance and/or on the packaging.

www A complete product specification, including the energy efficiency ratings for this oven, can be read and downloaded from our website www.indesit.com

REMOVING AND REFITTING THE DOOR

1. To remove the door, open it fully and lower the catches until they are in the unlock position.

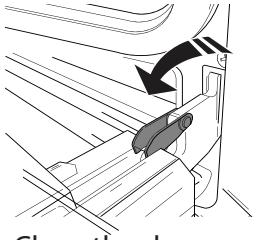

2. Close the door as much as you can.
Take a firm hold of the door with both hands – do not hold it by the handle.
Simply remove the door by continuing to close it while pulling it upwards (a) at the same time until it is released from its seating (b).

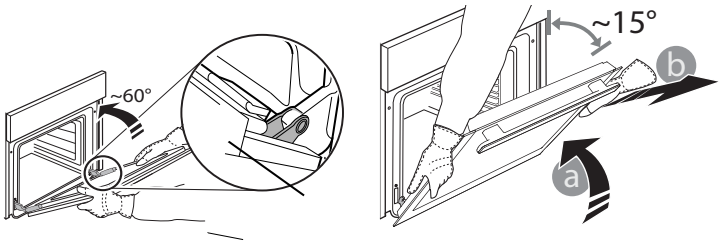

Put the door to one side, resting it on a soft surface.

3. Refit the door by moving it towards the oven, aligning the hooks of the hinges with their seating and securing the upper part onto its seating.

4. Lower the door and then open it fully.
Lower the catches into their original position: Make sure that you lower them down completely.

5. Try closing the door and check to make sure that it lines up with the control panel. If it does not, repeat the steps above.

CLICK TO CLEAN - CLEANING THE GLASS

1. After removing the door and resting it on a soft surface with the handle downwards, simultaneously press the two retaining clips and remove the upper edge of the door by pulling it towards you.

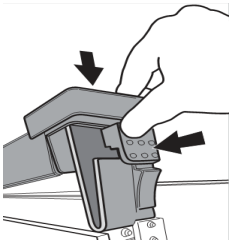

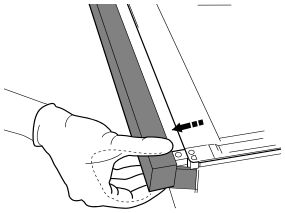

2. Lift and firmly hold the inner glass with both hands, remove it and place it on a soft surface before cleaning it.

3. When reassembling the inner door glass insert the glass panel correctly so that the text written on the panel is not reversed and can be easily legible.

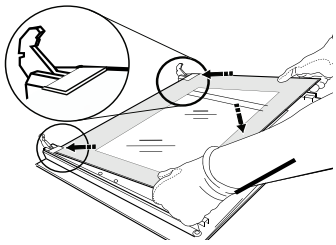

4. Refit the upper edge: a click will indicate correct positioning. Make sure the seal is secure before refitting the door

Steam-Assisted Oven Cleaning

This method of cleaning is recommended especially after cooking very fatty (roasted)meats.

This cleaning process allows to facilitate the removal of dirt of the walls of the oven by the generation of steam that is created inside the oven cavity for easier cleaning.

! Important! Before you start steam -cleaning:

-Remove any food residue and grease from the bottom of the oven.

- Remove any oven accessories (grids and drip pans).

Perform the above operations according to the following procedure:

1. pour 300ml of drinking water into the baking tray in the oven, placing it in the bottom shelf. In the models where the drip pan is not present, use a baking sheet and place it on the grill at the bottom shelf;
2. select the function of the oven **BOTTOM** and set the temperature to 90 ° C;
3. keep it in the oven for 35 min;
4. turn off the oven;
5. Once cooled the oven, you can open the door to complete the cleaning with water and a damp cloth;
6. eliminate any residual water from the cavity after finishing cleaning

When the steam –cleaning is done, after cooking especially fatty foods, or when grease is difficult to remove, you may need to complete the cleaning with the traditional method, described in the previous paragraph.

! Perform cleaning only in the cold oven!

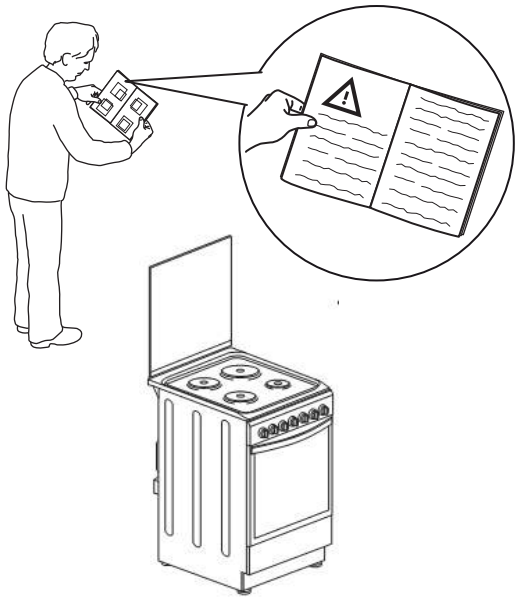

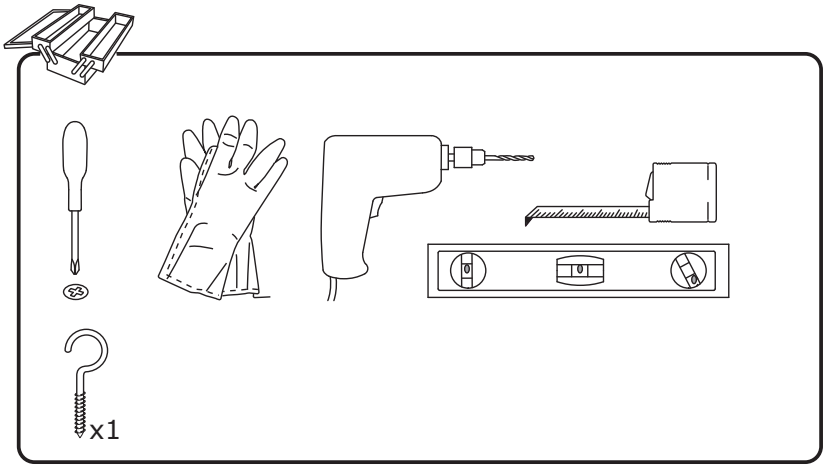

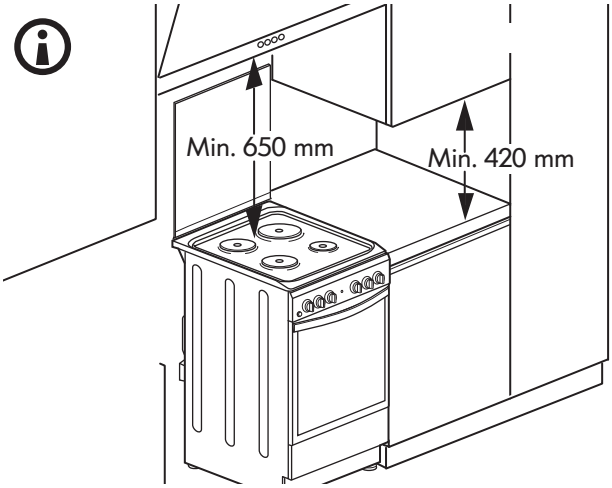

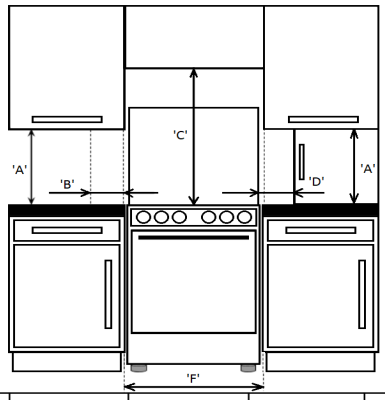

'A'	'B'	'C'	'D'	'F'
420mm Min	150mm Min	650mm Min	150mm Min	500mm Min

1

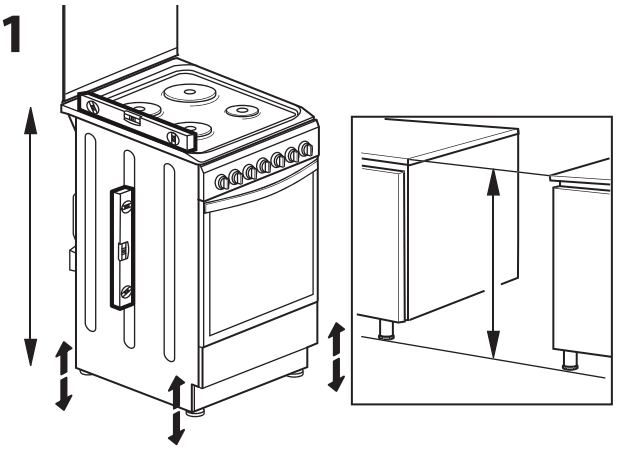

2

max. 15 mm

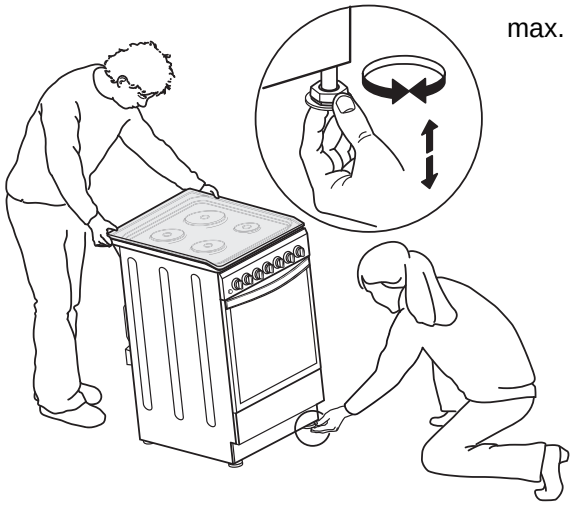

3

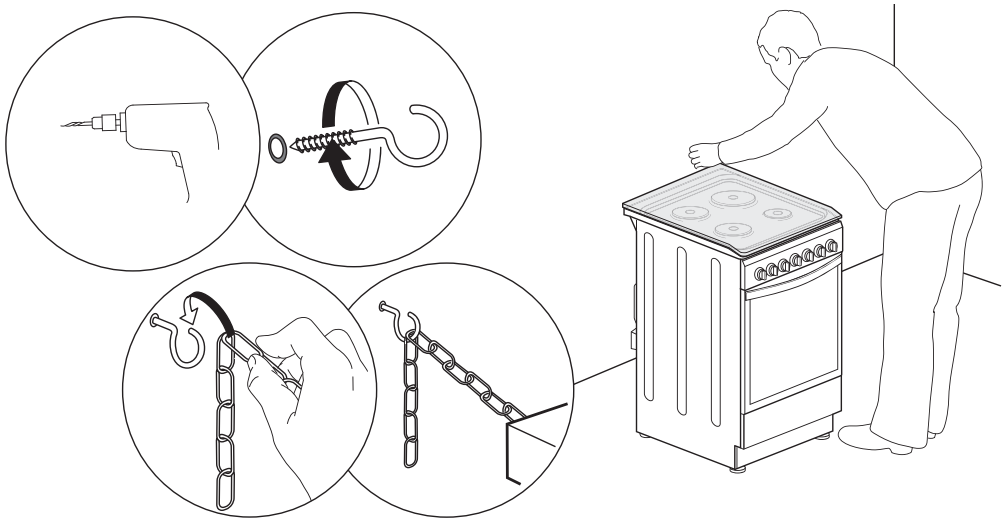

Whirlpool EMEA S.p.A.
Via Carlo Pisacane n.1
20016 Pero (MI), Italy
VAT number: IT00693740425
www.indesit.com

4

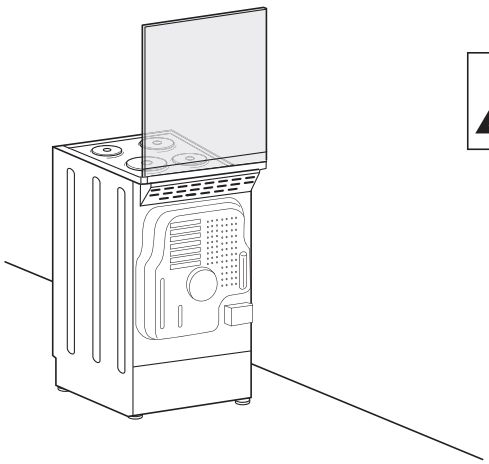

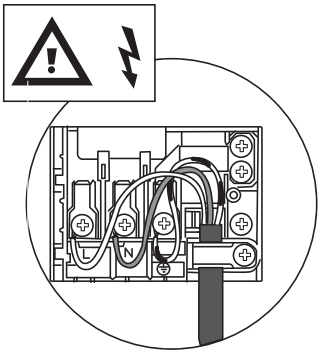

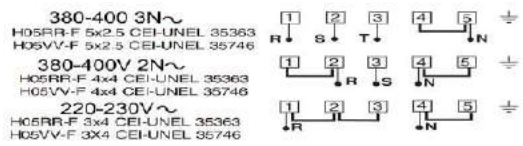

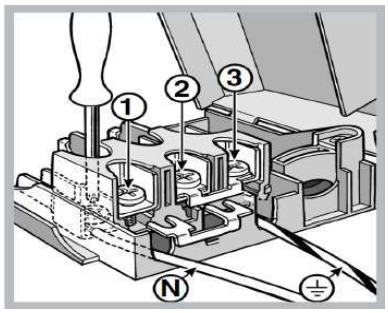

5

