Operating Instructions

50cm Free Standing Electric Cooker

EN

EN

ID5V92KMW/UK

Contents

Safety Information, 2

Features, control panel 4

Introduction , 5

Installation tips, 6

Use of hotplates , 8

Hotplates General Information Notes , 7

Choosing Your Utensils ,10

Grilling , 10

Grill Chart, 11

Conventional Oven, 12

Conventional Oven cooking charts - Meat, 13

Conventional Oven cooking charts - |Baking, 14

Using the Main Oven for Other Functions ,15

Care and Cleaning ,16

Cooking Results Not Satisfactory?, 17

Something Wrong With Your Cooker? ,18

If it Still Won't Work... / Disposal of the appliance , 19

Guarantee information/ Key Contacts, 20

Installation, 21

You must read these instructions prior to using your appliance and retain them for future use.

INDESIT

EN
SAFETY INSTRUCTIONS

IMPORTANT TO BE READ AND OBSERVED

Before using the appliance, read these safety instructions. Keep them nearby for future reference.

These instructions and the appliance itself provide important safety warnings, to be observed at all times. The manufacturer declines any liability for failure to observe these safety instructions, for inappropriate use of the appliance or incorrect setting of controls.

⚠ WARNING: The appliance and its accessible parts become hot during use. Care shoul be taken to avoid touching heating elements. Children less than 8 years of age must be kept away unless continuously supervised.

⚠ WARNING : If the hob surface is cracked, do not use the appliance – risk of electric shock.

⚠ WARNING : Danger of fire : Do not store items on the cooking surfaces.

⚠ CAUTION : The cooking process has to be supervised. A short cooking process has to be supervised continuously.

⚠ WARNING: Leaving the hob unattended when cooking with fat or oil can be dangerous – risk of fire. NEVER try to extinguish a fire with water, but switch off the appliance and then cover the flames e.g. with a lid or a fire blanket.

⚠ Do not use the hob as a work surface or support. Keep clothes or other flammable materials away from the appliance, unitl all the components have cooled down completely – risk of fire.

⚠ Very young children (0-3 years) should be kept away from the appliance. Young children (3-8 years) should be kept away from the appliance unless continuously supervised. Children from 8 years old and above and persons with reduced physical, sensory or mental capabilities or lack of experience and knowledge can use this appliance only if they are supervised or have been given instructions on safe use and understand the hazards involved. Children must not play with the appliance. Cleaning and user maintenance must not be carried out by children without supervision.

⚠ WARNING: The appliance and its accessible parts become hot during use. Care should be taken to avoid touching heating elements. Children less than 8 years of age must be kept away unless continuously supervised

⚠ Never leave the appliance unattended during food drying. If the appliance is suitable for probe usage, only use a temperature probe recommended for this oven - risk of fire.

⚠ Keep clothes or other flammable materials away from the appliance, until all the components have cooled down completely - risk of fire. Always be vigilant when cooking foods rich in fat, oil or when adding alcoholic beverages - risk of fire. Use oven gloves to remove pans and accessories. At the end of cooking, open the door with caution, allowing hot air or steam to escape gradually before accessing the cavity - risk of burns. Do not obstruct hot air vents at the front of the oven - risk of fire.

⚠ Exercise caution when the oven door is in the open or down position, to avoid hitting the door.

PERMITTED USE

⚠ CAUTION: The appliance is not intended to be operated by means of an external switching device, such as a timer, or separate remote controlled system.

⚠ This appliance is intended to be used in household and similar applications such as: staff kitchen areas in shops, offices and other working environments; farm houses; by clients in hotels, motels, bed & breakfast and other residential environments.

⚠ No other use is permitted (e.g. heating rooms).

⚠ This appliance is not for professional use. Do not use the appliance outdoors.

⚠ Do not store explosive or flammable substances (e.g. gasoline or aerosol cans) inside or near the appliance - risk of fire.

INSTALLATION

⚠ The appliance must be handled and installed by two or more persons - risk of injury. Use protective gloves to unpack and install - risk of cuts.

⚠ Installation, including water supply (if any), electrical connections and repairs must be carried out by a qualified technician. Do not repair or replace any part of the appliance unless specifically stated in the user manual. Keep children away from the installation site. After unpacking the appliance, make sure that it has not been damaged during transport. In the event of problems, contact the dealer or your nearest Aftersales Service. Once installed, packaging waste (plastic, styrofoam parts etc.) must be stored out of reach of children - risk of suffocation. The appliance must be disconnected from the power supply before any installation operation - risk of electric shock. During installation, make sure the appliance does not damage the power cable - risk of fire or electric shock. Only activate the appliance when the installation has been completed.

Do not remove the appliance from its polystyrene foam base until the time of installation.

⚠ Do not install the appliance behind a decorative door - risk of fire.



if the range is placed on a base, it must be leveled and fixed to the wall by the retention chain provided, to prevent the appliance slipping from the base.



WARNING: In order to prevent the appliance from tipping, the retention chain provided must be installed. Refer to the instructions for installation.

ELECTRICAL WARNINGS

⚠ The rating plate is on the front edge of the oven (visible when the door is open).

⚠ It must be possible to disconnect the appliance from the power supply by unplugging it if plug is accessible, or by a multi-pole switch installed upstream of the socket in accordance with the wiring rules and the appliance must be earthed in conformity with national electrical safety standards.

⚠ Do not use extension leads, multiple sockets or adapters. The electrical components must not be accessible to the user after installation. Do not use the appliance when you are wet or barefoot. Do not operate this appliance if it has a damaged power cable or plug, if it is not working properly, or if it has been damaged or dropped.

⚠ If the supply cord is damaged, it must be replaced with an identical one by the manufacturer, its service agent or similarly qualified persons in order to avoid a hazard - risk of electric shock.

⚠ If the power cable needs to be replaced, contact an authorized service center.

⚠ WARNING: Ensure that the appliance is switched off before replacing the lamp to avoid the possibility of electric shock.

CLEANING AND MAINTENANCE

⚠ WARNING: Ensure that the appliance is switched off and disconnected from the power supply before performing any maintenance operation; never use steam cleaning equipment - risk of electric shock.

⚠ Do not use harsh abrasive cleaners or metal scrapers to clean the door glass since they can scratch the surface, which may result in shattering of the glass.

⚠ Do not use abrasive or corrosive products, chlorine-based cleaners or pan scourers.

⚠ Make sure the appliance has cooled down before cleaning or performing maintenance. - risk of burns.

⚠ WARNING: Switch off the appliance before replacing the lamp - risk of electric shock.

DISPOSAL OF PACKAGING MATERIALS

The packaging material is 100% recyclable and is marked with the recycle symbol . The various parts of the packaging must therefore be disposed of responsibly and in full compliance with local authority regulations governing waste disposal.

DISPOSAL OF HOUSEHOLD APPLIANCES

This appliance is manufactured with recyclable or reusable materials. Dispose of it in accordance with local waste disposal regulations.



For further information on the treatment, recovery and recycling of household electrical appliances, contact your local authority, the collection service for household waste or the store where you purchased the appliance. This appliance is marked in compliance with European Directive 2012/19/EU, Waste Electrical and Electronic Equipment (WEEE). By ensuring this product is disposed of correctly, you will help prevent negative consequences for the environment and human health. The symbol on the product or on the accompanying documentation indicates that it should not be treated as domestic waste but must be taken to an appropriate collection centre for the recycling of electrical and electronic equipment.

ENERGY SAVING TIPS

Only preheat the oven if specified in the cooking table or your recipe. Use dark lacquered or enamelled baking trays as they absorb heat better.

DECLARATIONS OF CONFORMITY

This appliance meets Ecodesign requirements of European Regulation 66/2014 in compliance with the European standard EN 60350-1.

This appliance meets Ecodesign requirements of European Regulation 66/2014 in compliance with the European standard EN 60350-2.

Features, panel control

EN

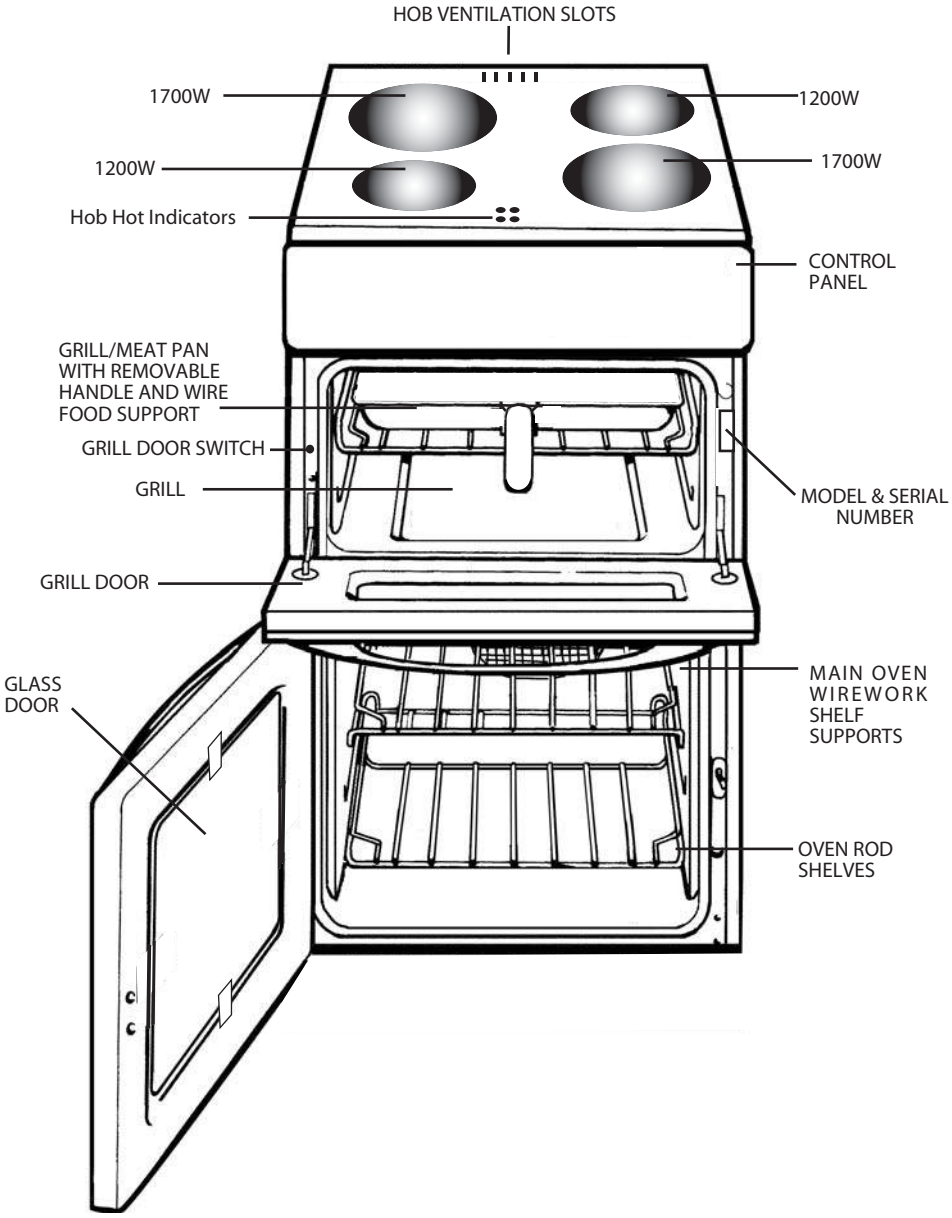

Panel control

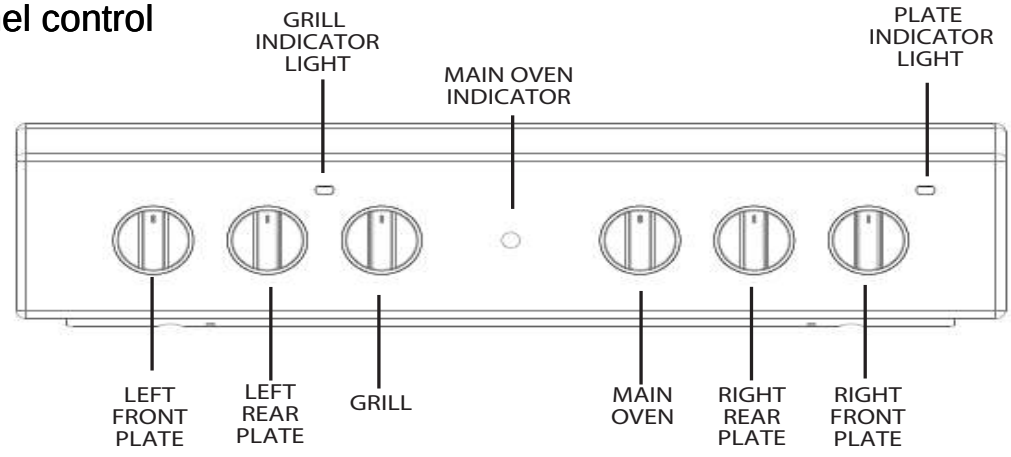

Introduction

EN

To help you make the best use of your cooker, PLEASE READ THIS BOOKLET CAREFULLY.
Your new cooker is guaranteed and will give lasting service.
The guarantee is only applicable if the cooker has been installed in accordance with the Installation Instructions.
The cooker is designed specifically for domestic use and responsibility will not be accepted for use in any other installation.

When first using the cooker ensure that the room is well ventilated (e.g. open a window or use an extractor fan) and that persons who may be sensitive to the odour avoid any fumes. It is suggested that any pets be removed from the room until the smell has ceased. This odour is due to any temporary finish and also any moisture absorbed by the insulation.

Technical Characteristics

Main Oven

Dimensions (HxWxD): 37,0 x 40,4 x 41,0 cm
Volume:62 Litres
Max. Oven Power Absorption: 1700 W

Voltage and Frequency
230-240V~ 50-60Hz

Declared energy consumption for Natural convection
Class
heating mode: Fan Oven

When the cooker is first used an odour may be emitted. This will cease after a period of use.

Our policy is one of continual improvement in design and development, therefore strict accuracy of illustrations and descriptions cannot be guaranteed.

*** The guarantee is subject to the provisions that the appliance:**

(a) Has been used solely in accordance with the Users Instruction Book.
(b) Has been properly connected to a suitable supply voltage as stated on the rating plate attached to this equipment.
(c) Has not been subjected to misuse or accident or been modified or repaired by any person other than the authorised employee or agent.
(d) Has been correctly installed.

Installation tips

EN

WARNING – THIS APPLIANCE MUST BE EARTHED.

Electrical connection

Electric cookers come without a power supply cable. The cooker is designed to operate on an electricity supply which conforms to the electrical data shown on the Rating Plate. The cooker can be connected to the mains only after removing the back panel of the cooker itself with a screwdriver.

The following installation procedure must be carried out by a qualified electrician. The electrical installation must comply with the IEE Regulations, Building & local By-Lays.
For the installation of the feeding cable carry out the following operations:

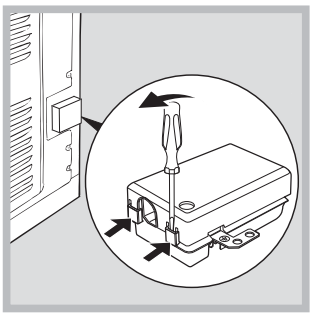

1 Open the terminal board by inserting a screwdriver into the side tabs of the cover. Use the screwdriver as a lever by pushing it down to open the cover (see diagram).

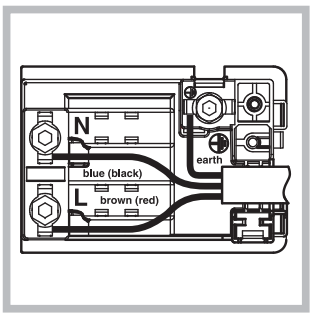

2 Loosen the cable clamp screw and remove it, using a screwdriver as a lever (see figure).

3 Remove the wire contact screws L-N-⏚, then fasten the wires under the screw heads, respecting the colour code: Black/Blue (N), Red/Brown (L) and Bare Wire/Yellow-Green (⏚).

- Once the connections have been made, tighten all the terminal screws fully.
- Fasten the supply cable in place with the clamp and close the cover of the terminal board.

N.B.: the power supply cable must have these minimum requirements:
Type: H05RR-F
H05VV-F
Section: 3x4 mm²

Positioning the Cooker

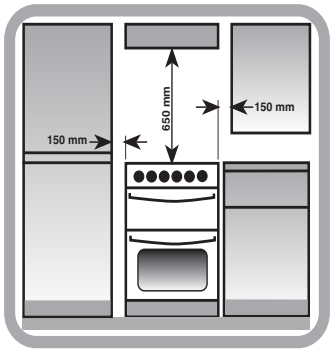

The height of the cooker can be adjusted by means of adjustable feet in the plinth (900mm - 915mm). Adjust the feet by tilting the cooker from the side. Then install the product into position.
NOTE: This appliance must not be fitted on a platform.
The cooker is designed to fit between kitchen cabinets spaced 500mm apart. The space either side need only be sufficient to allow withdrawal of the cooker for servicing. It can be used with cabinets one side or both as well as in a corner setting. It can also be used free-standing.
Adjacent side walls which project above hob level, must not be nearer to the cooker than 150mm and should be protected by heat resistant material.
Any overhanging surface or cooker hood should not be nearer than 650mm.

Moving the Cooker

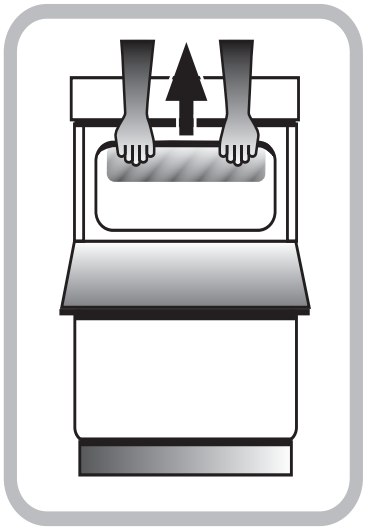

Before moving your cooker check that it is cool, and switch off at the cooker control unit.

Movement of your cooker is most easily achieved by lifting the front as follows:
Open the grill door sufficiently to allow a comfortable grip on the underside front edge of the oven roof, avoiding any grill elements.

Note: Take care in moving the cooker as it is heavy. Take care to ensure that any floor covering is not damaged.
Splashplate optional, apply to Parts Department (see Back Cover for contact number.)

The appliance must not be installed behind a decorative door in order to avoid overheating

Hotplate

Use of Hotplates

Note:
Under no circumstances should the hob be used with aluminium foil in contact with the hob surface.

The controls set the hotplates at six pre-set power levels. Each control can be used to select one of six temperature settings from a minimum at position 1 to a maximum at position 6.

Do Not leave a hotplate switched on without a pan as this wastes energy and may shorten the life of the hotplate.

CONTROL SETTINGS GUIDE

This is provided only as a guide – settings also depend on the type of pan used and the quality of food.

Knob Position	Type of food
1	To melt butter, chocolate, etc.
1 or 2	To heat food gently. To keep small amounts of water simmering. To heat sauces, containing egg yolks and butter. To simmer: stews, meat, fish, vegetables, fruit.
3	To heat solid and liquid foods. Keep water boiling. Thaw frozen vegetables. Make 2-3 egg omelettes.
4 or 5	To cook foods, just above simmering. To maintain 'rolling' boil for preserve making.
5 or 6	To seal meat and fry fish.
6	Frying potatoes. Bringing water to the boil. Deep fat frying. Dissolve sugar for preserve making.

Safety requirements for deep fat frying

1. Use a deep pan, large enough to completely cover the appropriate heating area.
2. Never fill the pan more than one-third full of oil.
3. Never leave oil or fat unattended during the heating or cooking period.
4. Never try to fry too much food at a time, especially frozen food. This only lowers the temperature of the oil or fat too much, resulting in greasy food.
5. Always dry food thoroughly before frying, and lower it slowly into the hot oil or fat. Frozen foods, in particular, will cause frothing and spitting, if added to quickly.
6. Never heat fat, or fry, with a lid on the pan.
7. Keep the outside of the pan clean and free from streaks of oil or fat.

Ceramic Hob

CAUTION: IF AT ANY TIME A CRACK IN THE SURFACE BECOMES VISIBLE, DISCONNECT THE APPLIANCE IMMEDIATELY FROM THE SUPPLY.

Under no circumstances should the hob be used with aluminium foil in contact with the hob surface as damage can occur.
The following boiling plates are located beneath the decorative circular patterned cooking areas:-
Front left 6 heat: 1200W
Rear left 6 heat: 1700W
Rear right 6 heat: 1200W
Front right 6 heat: 1700W

The cooking areas change colour when heated (become red) indicating which heating element is switched on. The cooking area returns to its original colour when the heating element is switched **Off.**

Warning: Even though the cooking area has returned to its original colour it may still be hot.
The controls for the hotplates can be turned in either direction.
Turn the control to 6 for fast cooking. To reduce the heat to cook more slowly or simmer, turn the control to a lower setting according to the size of the saucepan and the amount of liquid.
Pans can be placed on the unheated areas of the panel when cooking is finished and before serving food. It is inadvisable at any time to leave a heating element switched on without a pan in position as this wastes energy, and could make soil or rub-off from aluminium pans more difficult to remove. To protect elements against over-heating, safety cut-outs have been incorporated with each element. After several minutes with the control at setting 6 the safety cut-out switches the element **Off** and **On** continuously, thus preventing any adverse effects that may be caused by an excessive build-up of heat in the cooking area.

Hotplate

EN

Hotplates General Information Notes

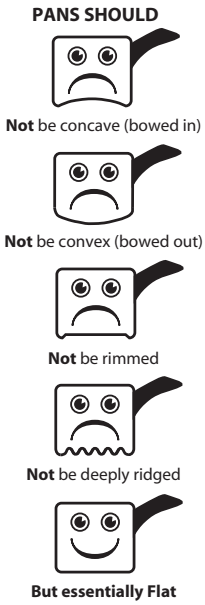

THE BEST COMBINATIONS

This table is a general guide to the types of pan suitable for different types of hobs and cookers. Remember pans should be good quality, with smooth, flat bases. For any further information refer to manufacturers' instructions.

	Ceramic*
Aluminium	✓
Stainless steel with single layer copper base	✗
Stainless steel with sandwich bases of aluminium and stainless or aluminium and copper	✓
Enamelled steel	✓
Enamelled aluminium	✓
Enamelled based cast iron	✓ With Extra Care
Copper	✗
Toughened glass or ceramic / glass / pottery	Not Recommended
Mild steel, Ferro-magnetic or stainless with a magnetic sandwich base	✓

Note: All copper pans are excellent conductors of heat, and are hard wearing and strong, but need quite a lot of care. They can be very heavy and do not usually have completely flat bases. The interiors are usually lined with a different material such as tin.

A stainless steel pan with a sandwich base of aluminium and stainless steel is an excellent conductor of heat and is suitable for use on ceramic and halogen hobs, providing they are used in accordance with the saucepans manufacturers' recommendations.

Stainless steel pans with a sandwich base of aluminium and copper are excellent conductors of heat. If using stainless steel saucepans with aluminium and copper sandwich bases on ceramic and halogen hobs, the use of these pans must be in accordance with the saucepan manufacturers' recommendations.
Extra care should be taken to ensure the base of the pan and the hob is cleaned, and the hob conditioned, after each and every use, when using this type of saucepan.

If these recommendations are not followed, the result will be a build up of small copper deposits on the surface of your hob which, if not cleaned after each use, will result in permanent marking of your hob.

Always lift the pan from the hob, do not drag or slide across the hob surface as damage may occur.

Grilling

Grilling

A switch operated by the door changes the heating element configuration between grill and oven operation. When the door is open, the top inner element is activated for intense downward heat; when the door is closed, the top outer and lower elements are activated to provide even oven heating.

To operate the grill proceed as follows:

- Open the grill door.
- Pre-heat the grill on setting 6 for approximately 5 minutes (see chart on guide to grilling).

- Fix the grill pan handle securely in position. See below.
- Food which only requires browning should be placed directly on/in the grill pan in the grill pan runner, or on the floor of the grill compartment. (the grill pan grid may be removed.)
- Leave the control on setting 6 for toast, sealing and fast cooking of foods. For thicker foods requiring longer cooking turn the control to a lower setting after the initial sealing, on both sides, on setting 6. The thicker the food the lower the control should be set.

Take care as the grill will be hot – always wear oven gloves. Always ensure that the grill pan is clean BEFORE use. Excess fat build up in the bottom of the pan could cause a fire hazard. Never line grill pan with foil.

Fixing the Grill Pan Handle

The grill pan handle is detachable from the pan to facilitate cleaning and storage. Fix the pan handle securely before use:

1. Fit the handle to the grill pan so that the external 'hooks' embrace the edge of the pan (fig. 1)
2. Make sure that the middle part of the handle fits exactly the protruding support of the pan (fig .2) and holds the pan from the bottom.

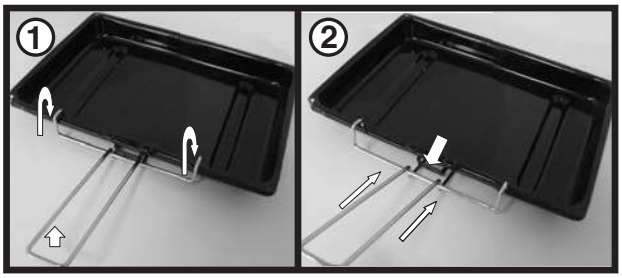

The food must be placed on the rack in the grill pan.

Position the grill pan on top of the oven rack. The best results are achieved by placing the oven rack on the uppermost shelves. Pouring a little water into the grill pan will make the collection of grease particles more efficient and prevent the formation of smoke.

The food to be cooked should be placed on the grill pan/grill pan food support.
Place the grill pan on the runners and push back to the stop position when the grill pan is correctly positioned beneath the grill element.

Plates and dishes placed on the floor of the grill compartment will be heated when the oven is in use.

Grill Compartment as a 'Hotcupboard'

Do not operate the grill control when using the compartment as a hotcupboard.

Do take care when removing plates, dishes and utensils from the grill compartment when the oven is in use as they may become quite hot.

You may need to use oven gloves when removing warmed items.

Grill Chart

EN

Pre - heat the grill for 5 minutes on maximum control setting before grilling

GRILL CHART

The settings in the above guide have been developed to cook food successfully without excessive fat spitting and splashing.

Food	Grill Setting	Approximate Cooking time
Toasting of Bread products	6	3 - 10 mins.
Small cuts of meat, sausages, bacon, etc.	5-6	15 - 20 mins.
Chops etc. Gammon steaks Chicken pieces	5	20 - 25 mins. Wire food support used in upturned position for chicken.
Fish: fingers Whole Fillets	5	10 - 20 mins. Whole fish and fillets placed in the base of the grill pan.
Fish in breadcrumbs	5	15 - 20 mins.
Pre - Cooked potato products	5	15 - 20 mins.
Pizzas	5	12 - 15 mins. in the base of the grill pan.
Browning of food	6	8 - 10 mins. Dish placed directly on base of the grill pan and pan placed on the base of the grill compartment.

Main Oven

Oven Control
Heating of the oven is achieved by turning control clockwise to the required temperature scale on the control panel, as recommended in the temperature charts. The indicator light will immediately come on and will then automatically go off and on during cooking as the oven thermostat maintains the correct temperature.
The cooking charts provided in this book are a guide only, giving approximate cooking temperatures and times. To suit personal taste and requirements, it may be necessary to increase or decrease temperatures by 10°C.
The oven is fitted with two rod shelves. The oven is heated by two tubular sheathed elements located under the floor of the oven and on the oven roof, inside the cavity. It should be noted that at the end of a cooking period there may be a momentary puff of steam when the oven door is opened. This will disperse in a few seconds and is a perfectly normal characteristic of an oven with a good door seal.

Oven Positions

The correct positioning of food is indicated in the temperature charts.
To prepare meat and poultry for roasting in your conventional oven.
(a)Wipe the joint, dry well with a clean cloth, kitchen tissue etc. and weigh it. Meat which has been stored in a refrigerator should be allowed to come to room temperature for approximately 30 minutes before cook ing, and frozen meat or poultry must be completely defrosted before placing in the oven.
(b)The weight of any stuffing used should be added to the oven ready weight of the meat / poultry before calculating the cooking time.
(c)Place the joint in the meat pan supplied with your cooker. Small joints weighing less than 1.75kg (31/2 lbs) should be roasted in a smaller meat pan/tin - or they may be 'pot roasted' - a small joint in a large meat pan causes unnecessary oven splashing and evaporation of meat juices.
(d)Additional fat should not be added, except for veal, very lean meat or poultry which can either be 'larded' with fat bacon or brushed **very sparingly** with cooking oil or melted fat.
(e)Beef, lamb, mutton and poultry may be dusted lightly with seasoned flour to give a crisp outer surface. The skin of duck and goose should be pricked to release excess fat during cooking, and the rind of pork should be scored, brushed lightly with oil, and rubbed with salt, to give crisp crackling.
(f) Potatoes for roasting only require to be brushed with cooking oil or melted fat.
(g)It is not necessary to baste when roasting in an electric oven and stock or liquid should not be added to the meat pan since this only causes unnecessary soiling, steam and condensation.

For optimum cooking performance, there must be clearance between meat pan and oven sides. The meat pan must be placed lengthways in the oven to allow for air circulation.

Times and Temperatures for Roasting

The secret of succulent, tender meat, is not to roast it too quickly, at too high a temperature. Best results are obtained when roasting is carried out at a low temperature. When a lower temperature is used, the joint loses less weight, is more tender (too high a temperature causes meat to be tough and dry) and the splashing of fat onto the oven interior is reduced to a minimum. When a complete meal is being cooked in the oven, cooking time may need to be increased and temperature may need to be raised for approximately the last 30 minutes of the cooking period (for instance when cooking Yorkshire pudding to serve with roast beef). The suggested times and temperatures should be used as a guide, but may vary according to:-

1. Whether you prefer meat rare, medium or well done.
2. The size and shape of your joint.
(a)A short thick joint requires a longer cooking period than a long thin joint.
(b)A small joint under 1.5kg (3 lbs) takes longer per 450g (1 lb) cook in the time given for 'minutes' per 450g (1 lb) without the 'minutes' over added.
(c)Boned/rolled and stuffed joints take longer to cook through than those with a bone.

N.B.
*R*emember to switch off the oven control after cooking is finished. If the door of the oven is left open for long periods of time with the control switch ON, then the grill element will become hot. The correct positioning of food is indicated in the temperature charts.

Conventional Oven - Cooking Chart MEAT

EN

Note: Where times are stated, they are approximate only.

Fan Oven Cooking			
Meat	Pre-heat	Temperature C	Time (approx.)
Beef	No	160/180	20-25 mins per 450g (1lb) + 20 mins extra
Lamb	No	160/180	20-30 mins per 450g (1lb) + 25 mins extra
Pork	No	160/180	25-30 mins per 450g (1lb) + 25 mins extra
Veal	No	160/170	25-30 mins per 450g (1lb) + 25 mins extra
Chicken/ Turkey up to 4kg (8lb)	No	160/180	18-20 mins per 450g (1lb) + 20 mins extra
Turkey 4 to 5.5kg (8 to 12lb) over 5.5kg (12lb)	No		13-15 mins per 450g (1lb) at 150/160°C allow 12 mins per 450g at 150°C
Casserole	No	140-150	1½ - 2 Hrs

The most accurate method of testing the readiness of joints of meat or whole poultry is to insert a meat thermometer into the thickest part of a joint, or the thickest part of poultry thighs, during the cooking period. The meat thermometer will indicate when the required internal temp has been reached.

Beef:	Rare:	60°C	**Lamb:**	80°C	**Poultry:** 90°C
	Medium:	70°C	**Pork:**	90°C	
	Well Done:	75°C	**Veal:**	75°C	

Cooking Chart- Baking

EN

Baking	Fan Oven Cooking		
Food	Pre-heat	Temperature C	Time in mins.
Scones	Yes	210/220	9-12
Small Cakes		170/180	15-25
Victoria Sandwich		160/170	20-25
Sponge Sandwich (fatless)	Yes	170/190	15-20
Swiss Roll	Yes	190/200	12-15
Semi-rich Fruit cakes		140/150	60-75 7 inch
Rich Fruit Cakes		130/140	Depending on size
Shortcrust Pastry		190/200	Dependent on use
Puff Pastry		190/200	Dependent on use
Yorkshire Pudding	Yes	180/190	30-45
Individual Yorkshire Puddings	Yes	190/200	20-25
Milk Pudding		130/140	105-135
Baked Custard		140/150	40-50
Bread	Yes	200/210	45-50
Meringues		80-90	180-240

Note:
If soft margarine is used for cake making, temperatures recommended by the manufacturers should be followed. Temperatures recommended in this chart refer to cakes made with block margarine or butter only.

Using the Main Oven for Other Functions

EN

‘S’ SLOW Setting

This is used for slow cooking, keeping food warm and warming plates for short periods. Extra care should be taken when warming bone china, as it may be damaged in a hot oven.

Advantages of “SLOW” cooking are:

The oven stays cleaner because there is less splashing.
Timing of food is not as critical, so there is less fear of overcooking.
Inexpensive joints of meat are tenderised.
Fully loading the oven can be economical.
Cooking times can be extended in some cases by up to 2 hours.

Operation:

1. Place the prepared food in the main oven and ensure the door is fully closed.
2. Select ‘S’ (Slow Cooking Temperature) by turning the Main Oven Control clockwise ensuring the oven door is fully closed.

Storage and re-heating of food:

1. If food is to be frozen or not used immediately, place it in a clean container and cool as soon as possible.
2. Always thaw frozen food completely in the refrigerator before re-heating.
3. Always reheat food thoroughly and ensure it is piping hot before serving.
4. Only re-heat food once.

Points to consider when preparing food for “SLOW” cooking:

1. Make sure that the dishes to be used will fit into the oven ensuring enough room for air to circulate.
2. All dishes cooked on the slow setting will require a minimum of 6 hours, however, **if** they are cooked for 1 -2 hours longer then deterioration in their appearance may be noticed.
3. Never cook joints of meat over 2.7kg (6 lb) or poultry over 2.0kg (4lb 8oz).
We do not recommend that joints of meat or poultry are stuffed before cooking on the slow setting.
4. To seal in the meat juices, always cook meat or poultry at 170°C for 30 minutes before wrapping in foil and placing on a rack over a tin (to allow good air circulation) before turning the control to the slow setting and cooking immediately.
5. Always ensure that joints of pork and poultry are thoroughly cooked by checking with a meat thermometer before serving.
6. Always thaw frozen foods completely before cooking. We do not recommend placing frozen food in the oven to cook.
7. Always bring soups, liquids and casseroles to the boil before placing in the oven.
8. Ensure that casserole dishes have a good seal (not airtight) and cover to the top with foil to prevent loss of moisture.
9. Ensure that fruit and vegetables are cut into even sized small pieces to cook properly.
10. Always adjust seasoning before serving.
11. If using dried red kidney beans it is important that the beans are soaked and then boiled fora minimum of 10 minutes before using in any dish to destroy any toxins.
12. When cooking fish or egg dishes it may be necessary to check during cooking to avoid overcooking.

Care and maintenance

EN

TURN OFF THE MAIN SWITCH AND ENSURE THE COOKER IS COLD BEFORE CLEANING. BEFORE SWITCHING ON AGAIN, ENSURE THAT ALL CONTROLS ARE IN THE OFF POSITION.

Do not use steam cleaning equipment.

Use protective gloves during all operations.

Carry out the required operations when the oven is cold.

Disconnect the appliance from the power supply.

Do not use wire wool, abrasive scourers or abrasive/corrosive cleaning agents, as these could damage the surfaces of the appliance.

EXTERIOR SURFACES

• Clean the surfaces with a damp microfibre cloth. If they are very dirty, add a few drops of pH-neutral detergent. Dry them with a dry cloth.
• Do not use corrosive or abrasive detergents. If any of these products inadvertently comes into contact with the surfaces of the appliance, clean immediately with a damp microfibre cloth.

INTERIOR SURFACES

• After every use, leave the oven to cool and then clean it, preferably while it is still warm, to remove any deposits or stains caused by food residues To dry any condensation that has formed as a result of cooking foods with a high water content, let the oven to cool completely and then wipe it with a cloth or sponge.
• Clean the glass in the door with a suitable liquid detergent.

CERAMIC HOB

To reduce the amount of cleaning always ensure that the hob and cooking utensils are clean and dry before use. Regular use of cleaner conditioner is recommended for proper care and protection of the hob surface. Apply conditioner before using the hob for the first time. It contains a mild cleaning agent, so that subsequent applications may clean off soil and apply a protective film at the same time. For stubborn stains or heavy soiling use the materials, which are specially prepared for this activity.

ACCESSORIES

Soak the accessories in a washing-up liquid solution after use, handling them with oven gloves if they are still hot. Food residues can be removed using a washing-up brush or a sponge.

INSPECTING THE OVEN SEALS

Check the door seals around the oven periodically. If the seals are damaged, please contact your nearest Authorised After-sales Service Centre. We recommend that the oven is not used until the seals have been replaced.

CATALYTIC PANELS (SOME MODELS ONLY)

Special catalytic panels facilitate the cleaning of the cooking compartment thanks to their special self-cleaning coating, which is highly porous and able to absorb grease and grime.

Please note: Using corrosive or abrasive cleaning agents, stiff brushes, pan scourers or oven sprays could damage the catalytic surface and compromise its self-cleaning properties.

Please contact our After-sales Service if you require replacement panels.

REPLACING THE LIGHT

1. Disconnect the oven from the power supply.

2. Unscrew the cover from the light, replace the bulb and screw the cover back on the light.

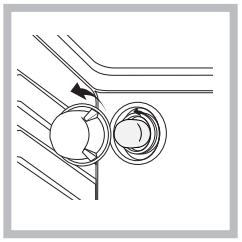

3. Reconnect the oven to the power supply.

Note: Use 25 W/230 V type E14

The bulb used in the product is specifically designed for domestic appliances and is not suitable for general room lighting within the home (EC Regulation 244/2009).

Light bulbs are available from our After-sales Service.

- Do not handle bulbs with your bare hands as your fingerprints could damage them. Do not use the oven until the light cover has been refitted.

Care and maintenance

EN

Respecting and conserving the environment

- Whenever possible, avoid pre-heating the oven and always try to fill it. Open the oven door as little as possible because heat is lost every time it is opened. To save a substantial amount of energy, simply switch off the oven 5 to 10 minutes before the end of your planned cooking time and use the heat the oven continues to generate.
- Keep gaskets clean and tidy to prevent any door energy losses
- If you have a timed tariff electricity contract, the “delay cooking” option will make it easier to save money by moving operation to cheaper time periods.
- The base of your pot or pan should cover the hot plate. If it is smaller, precious energy will be wasted and pots that boil over leave encrusted remains that can be difficult to remove.
- Cook your food in closed pots or pans with well-fitting lids and use as little water as possible. Cooking with the lid off will greatly increase energy consumption
- Use purely flat pots and pans
- If you are cooking something that takes a long time, it's worth using a pressure cooker, which is twice as fast and saves a third of the energy.

Assistance

Please have the following information handy:

- The appliance model (Mod.).
- The serial number (S/N).

This information can be found on the data plate located on the appliance and/or on the packaging.

AFTER-SALES SERVICE

To receive assistance, call the number given on the warranty leaflet enclosed with the product or follow the instructions on our website. Be prepared to provide:

- a brief description of the problem;
- the exact model type of your product;
- the assistance code (the number following the word SERVICE on the identification plate attached to the product, which can be seen on the inside edge when the oven door is open);
- your full address;
- a contact telephone number.

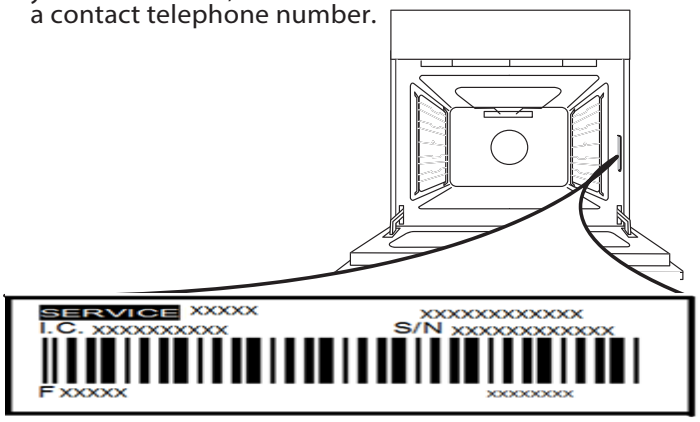

Please note: If repairs are required, contact an authorised service centre that is guaranteed to use original spare parts and perform repairs correctly.

Please refer to the enclosed warranty leaflet for more information on the warranty.

www A complete product specification, including the energy efficiency ratings for this oven, can be read and downloaded from our website www.indesit.com

Cooking Results Not Satisfactory?

Problem	Check
Grilling Uneven cooking front to back	Ensure that the grill pan is positioned centrally below the grill element.
Fat splattering	Ensure that the grill is not set to too high a temperature.
Oven Baking Uneven rising of cake	Ensure that the oven shelves are level by using a spirit level on the rod shelf and adjusting, using suitable packing e.g. wood, under the feet of the appliance. This should be checked both left to right and front to back. Ensure that the food is positioned centrally in the oven.
Sinking of cakes	The following may cause cakes to sink: 1. Cooking at too high a temperature. 2. Using normal creaming method with soft margarine.
Over/Under cooking Fast/Slow cooking	Refer to the cooking times and temperatures given in the oven temperature charts, however, it may be necessary to increase or decrease temperatures by 10°C to suit personal taste. Do not use utensils greater than 2Ľ ins in height.

Something Wrong with your Cooker

EN

Before contacting your nearest Service Centre/Installer, check the problem guide below; there may be nothing wrong with your cooker.

Problem	
Slight odour or small amount of smoke when using the cooker for the first time.	This is normal and should cease after a short period.
Nothing Works	Is the main cooker wall switch turned on? There may be no electricity supply.
Oven temperature seems too high or too low.	Check that the temperature has been set in accordance with the temperature charts. It may be necessary to increase or decrease the recommended temperature by up to 10°C to suit your taste.
Oven does not cook evenly.	Check that the temperature and shelf position are as recommended in the temperature charts. Check that the containers being used in the oven allow sufficient air flow around them. Check that the cooker is level.
Hotplates are slow to boil or will not simmer	Check that your pans conform to the recommendations in these instructions.
Marks appearing on hotplates. Can not clean hob / hotplates.	The hob surround can be cleaned with warm soapy water and a cream cleaner, such as Cif. The sealed hotplates should be cleaned regularly, (please refer to the Care and Cleaning section for further information. Please note that replacement hob cleaning kits are available from our parts department, see Key Contacts, back page.
Grill not working.	The grill door MUST be open.
Grill keeps turning on and off.	When the grill control is operated at a setting less than maximum, this is normal regulator operation, not a fault.
Condensation on the wall at the rear of the cooker.	Steam and/or condensation may appear from the vent at the rear of the appliance when using an oven particularly for foods with a high water content e.g. frozen chips, roast chicken etc. This is normal and any excess should be wiped off.
Steam / Condensation in the oven after use.	Steam is a by-product of cooking any food with a high water content. To help minimise always: a) Try to avoid leaving food in the oven to cool after being cooked. b) Use a covered container, wherever possible

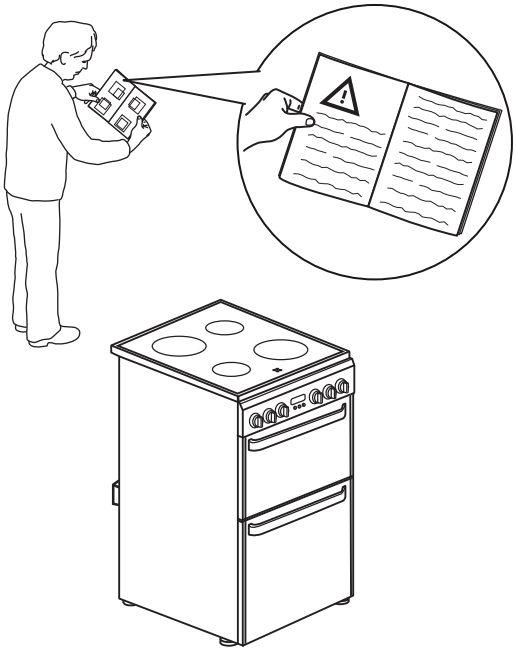

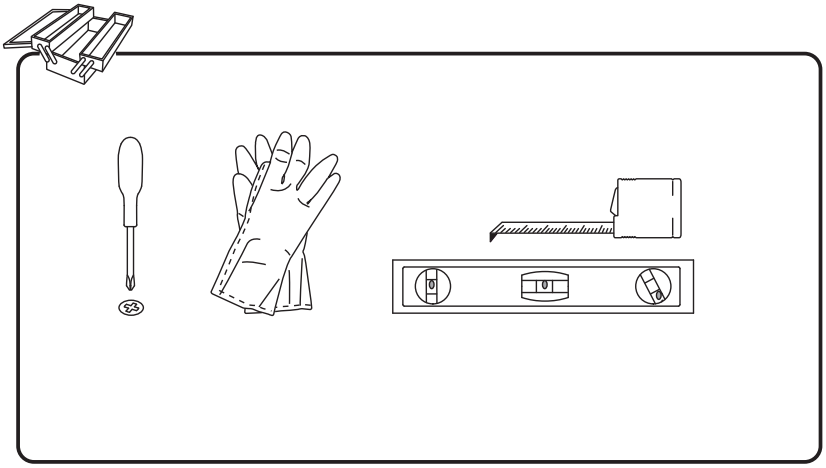

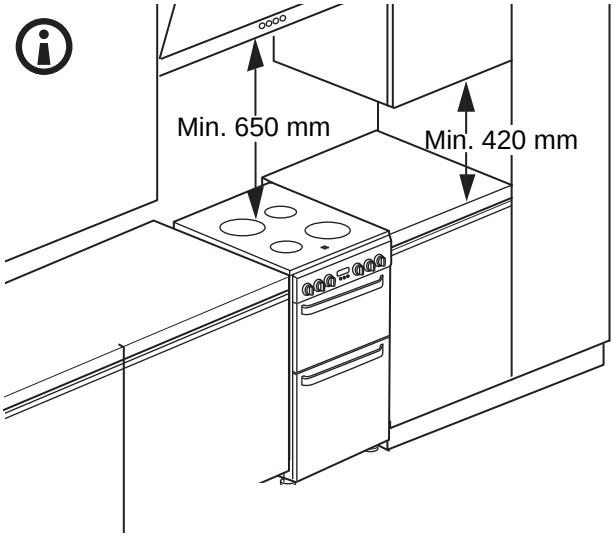

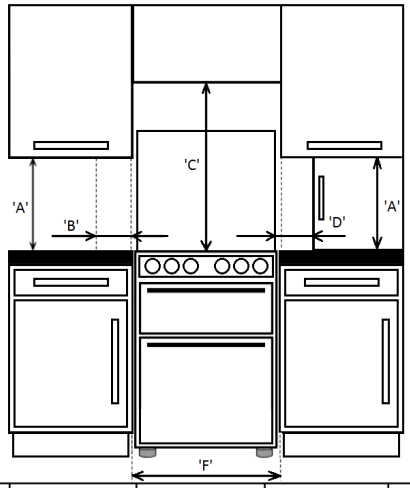

'A'	'B'	'C'	'D'	'F'
420mm Min	150mm Min	650mm Min	150mm Min	500mm Min

1

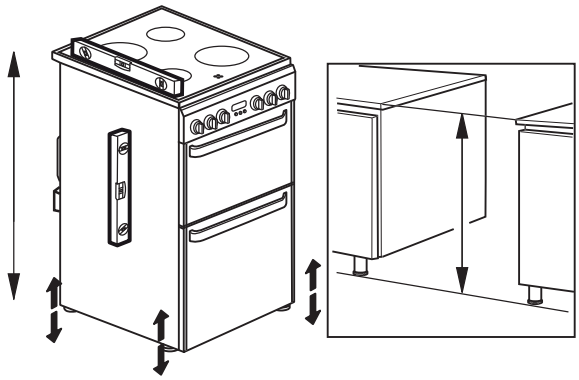

2

max. 15 mm

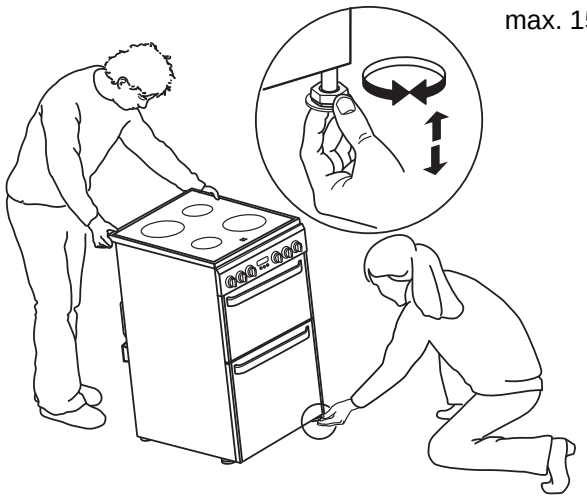

3

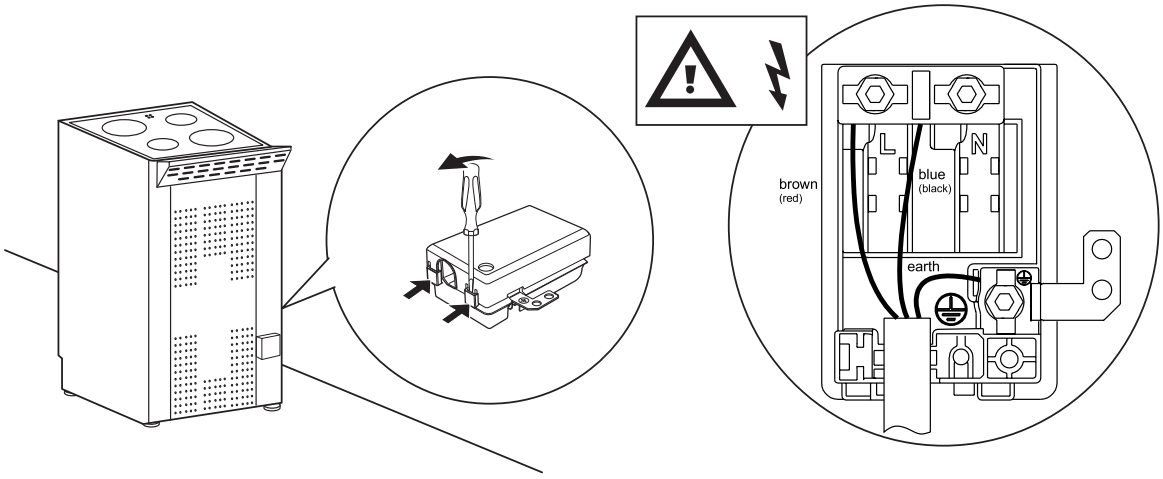

4

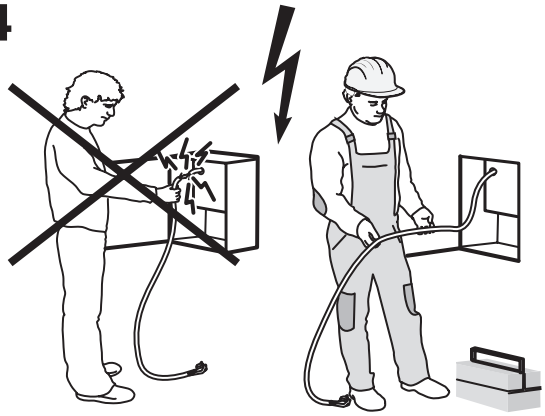

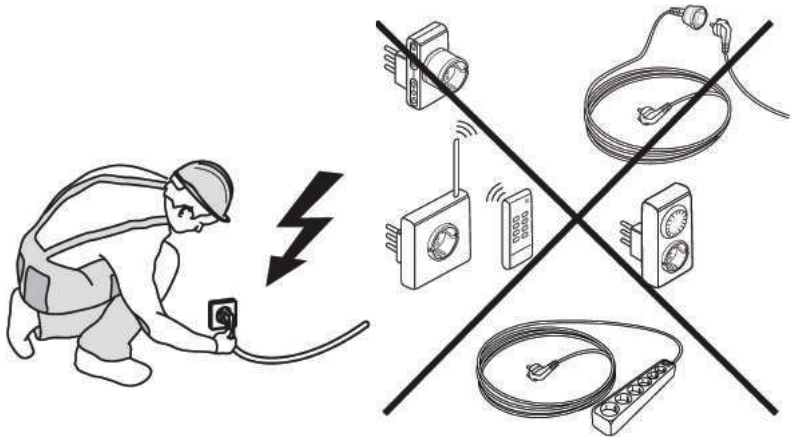

Whirlpool EMEA S.p.A.
Via Carlo Pisacane n.1
20016 Pero (MI), Italy
VAT number: IT00693740425
www.indesit.com

11/2018 - W11293241
XEROX FABRIANO