PSLMO 65F LS W

12NC: F156216

GTIN (EAN) code: 5054645562169

Hotpoint



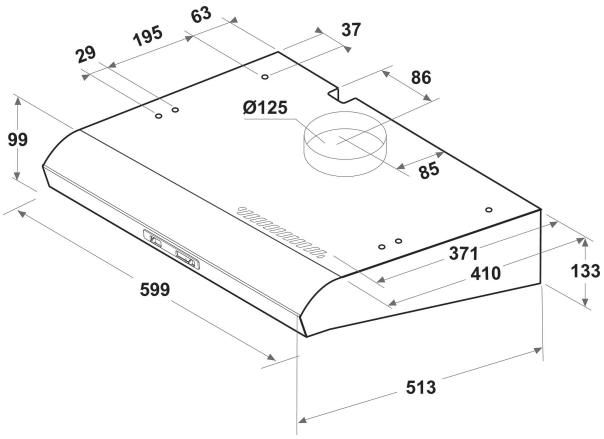

MAIN FEATURES

Product group	Hood
Colour body	White
Material body	Stainless steel
Colour chimney	N/A
Material chimney	N/A
Typology	Built-in/Built-under
Installation type	Built-in
Type of control	Mechanical
Type of control settings	-
Decor panel options	N/A
Motor location	Integrated motor in hood body
Operating Mode	Convertible
Electrical connection rating (W)	121
Current (A)	0,8
Voltage (V)	220-240
Frequency (Hz)	50
Length of Electrical Supply Cord (cm)	150
Plug type	No
Chimney height (mm)	-
Height of product, without chimney (mm)	132
Height of the product	132
Width of the product	599
Depth of the product	513
Minimum niche height	0
Minimum niche width	0
Niche depth	0
Net weight (kg)	5.8

TECHNICAL FEATURES

Type of manual control devices	Slider
Type of automatic control devices	-
Number of motors	1
Total power of the motors (W)	115
Number of speed settings: boost option availability	3
Boost presence	No
Maximum output air extraction (m^3/h)	208
Boost position air extraction (m^3/h)	0
Maximum output recirculating air (m^3/h)	75
Boost position output recirculating (m^3/h)	0
Light Control Type	On/Off
Number of lights	2
Type of lamps used	LED
Total power of the lamps (W)	6
Diameter of air outlet (mm)	125
No-return airflow flap	No
Grease filter material	Washable aluminium
Odour filter	Yes

PERFORMANCES

Sound power at min. speed (2010/30/EU)	52
Sound power at max. speed (2010/30/EU)	71
Noise level with boost position (dB(A) re 1 pW)	0