IFW 6230 IX UK

12NC: F102677

GTIN (EAN) code: 8050147026779



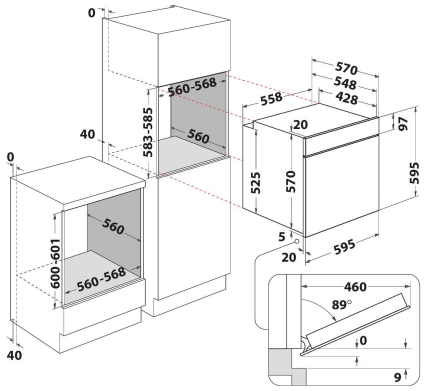

MAIN FEATURES

Product group	Oven
Commercial code	IFW 6230 IX UK
Main colour of product	Inox
Construction type	Built-in
Type of control	Mechanical
Type of control settings	-
Are any hobs controls integrated?	No
Which kind of hobs can be controlled?	-
Automatic programmes	No
Current (A)	13
Voltage (V)	220-240
Frequency (Hz)	50/60
Length of Electrical Supply Cord (cm)	100
Plug type	UK
Depth with open door 90 degree (mm)	-
Height of the product	595
Width of the product	595
Depth of the product	551
Minimum niche height	0
Minimum niche width	0
Niche depth	0
Net weight (kg)	27.1
Usable volume (of cavity)	71
Integrated Cleaning system	No
Grids of the cavity	1
Trays	1

TECHNICAL FEATURES

Timer	-
Time control	Mechanical
Time-setting options	Start and Stop
Safety device	-
Interior light	Yes
Number of interior lights of the cavity	1
Position of interior lights of the cavity	Front left
Oven guides of the cavity	Wall-embedded
Probe of the cavity	No

PERFORMANCES

Energy input	Electric
Type of energy of the cavity	Electricity
Energy efficiency class - NEW (2010/30/EU)	A
Energy consumption per cycle conventional - NEW (2010/30/EU)	0.81
Energy consumption per cycle forced air convection - NEW (2010/30/EU)	0