Instructions for use

Washer-dryer

GB

! This symbol reminds you to read this instruction manual.

GB

English,1

XWDE 961680

Contents

Installation, 2-3-4-5
Unpacking and levelling
Connecting the electricity and water supplies
The first wash cycle
Technical data

Care and maintenance, 6
Cutting off the water and electricity supplies
Cleaning the washer-dryer
Cleaning the detergent dispenser drawer
Caring for the door and drum of your appliance
Cleaning the pump
Checking the water inlet hose

Precautions and tips, 7
General safety
Disposal

Description of the washer-dryer, 8-9
Control panel
Display

How to run a wash cycle or a drying cycle, 10

Wash cycles and options, 11-12
Table of wash cycles
Wash options
Push&Wash+Dry

Detergents and laundry, 13-14
Detergent dispenser drawer
Preparing the laundry
Special wash cycles
Load balancing system

Troubleshooting, 15-16

Product Guarantee and Repair Information, 17

INDESIT

Installation

GB

! This instruction manual should be kept in a safe place for future reference. If the washer-dryer is sold, transferred or moved, make sure that the instruction manual remains with the machine so that the new owner is able to familiarise himself/herself with its operation and features.

! Read these instructions carefully: they contain vital information relating to the safe installation and operation of the appliance.

Unpacking and levelling

Unpacking

1. Remove the washer-dryer from its packaging.
2. Make sure that the washer-dryer has not been damaged during the transportation process. If it has been damaged, contact the retailer and do not proceed any further with the installation process.

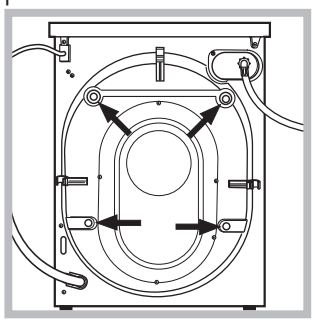

3. Remove the 4 protective screws (used during transportation) and the rubber washer with the corresponding spacer, located on the rear part of the appliance (*see figure*).

4. Close off the holes using the plastic plugs provided.
5. Keep all the parts in a safe place: you will need them again if the washer-dryer needs to be moved to another location.

! Packaging materials should not be used as toys for children.

Levelling

1. Install the washer-dryer on a flat sturdy floor, without resting it up against walls, furniture cabinets or anything else.

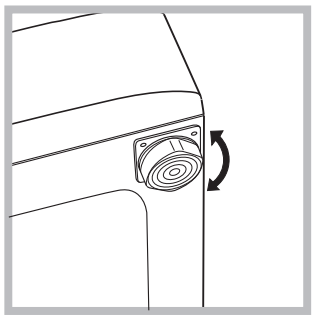

2. If the floor is not perfectly level, compensate for any unevenness by tightening or loosening the adjustable front feet (*see figure*); the angle of inclination, measured in relation to the worktop, must not exceed 2°.

Levelling the machine correctly will provide it with stability, help to avoid vibrations and excessive noise and prevent it from shifting while it is operating. If it is placed on carpet or a rug, adjust the feet in such a way as to allow a sufficient ventilation space underneath the washer-dryer.

Connecting the electricity and water supplies

Connecting the water inlet hose

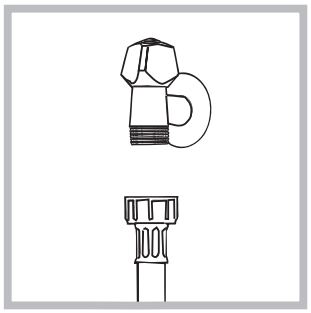

1. Connect the supply pipe by screwing it to a cold water tap using a ¾ gas threaded connection *(see figure).* Before performing the connection, allow the water to run freely until it is perfectly clear.

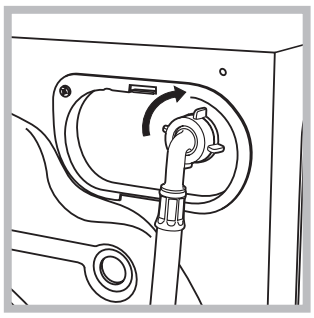

2. Connect the inlet hose to the washer-dryer by screwing it onto the corresponding water inlet of the appliance, which is situated on the top right-hand side of the rear part of the appliance *(see figure)*.

3. Make sure that the hose is not folded over or bent.

! The water pressure at the tap must fall within the values indicated in the Technical details table *(see next page).*

! If the inlet hose is not long enough, contact a specialised shop or an authorised technician.

! Never use second-hand hoses.

! Use the ones supplied with the machine.

Connecting the drain hose

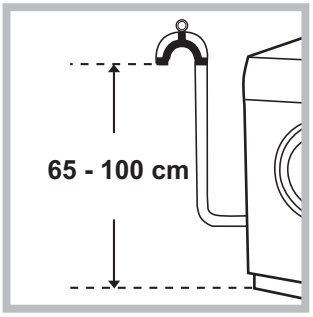

Connect the drain hose, without bending it, to a draining duct or a wall drain situated between 65 and 100 cm from the floor;

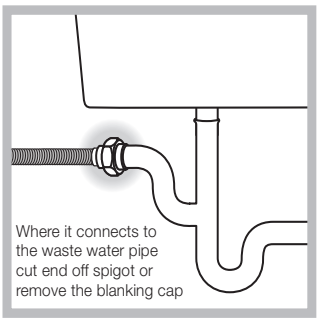

The drain hose may be connected to an under-sink trap. Before connecting the drain hose from the machine ensure that any blanks or removable ends have been taken off the spigot.

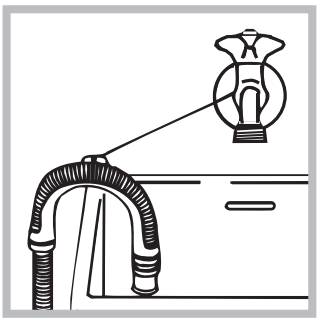

If it is placed over the edge of a basin or sink be sure the free end of the hose should not be underwater.

! We advise against the use of hose extensions; in case of absolute need, the extension must have the same diameter as the original hose and must not exceed 150 cm in length. Ensure that if the drain hose is pushed into a standpipe, that the end does not go down more than 15cms (6 inches). If the hose is pushed down too far, this may cause the machine to self -syphon ie. continuously empty as it is filling.

Electric connection

Before plugging the appliance into the mains socket, make sure that:

• the socket is earthed and in compliance with the applicable law;

• the socket is able to sustain the appliance's maximum power load indicated on the Technical Data Plate fixed on the machine;

• the supply voltage is included within the values indicated on the Technical Data Plate fixed on the machine.

• the socket is compatible with the washing machine's plug. If this is not the case, replace the socket or the plug.

Your appliance is now supplied with a 13 amp fused plug it can be plugged into a 13 amp socket for immediate use. Before using the appliance please read the instructions below.

WARNING - THIS APPLIANCE MUST BE EARTHED.
THE FOLLOWING OPERATIONS SHOULD BE CARRIED OUT BY A QUALIFIED ELECTRICIAN.

Replacing the fuse:
When replacing a faulty fuse, a 13 amp ASTA approved fuse to BS 1362 should always be used, and the fuse cover re-fitted. If the fuse cover is lost, the plug must not be used until a replacement is obtained.

Replacement fuse covers:
If a replacement fuse cover is fitted, it must be of the correct colour as indicated by the coloured marking or the colour that is embossed in words on the base of the plug. Replacements can be obtained directly from your nearest Service Depot.

Removing the plug:
If your appliance has a non-rewireable moulded plug and you should wish to re-route the mains cable through partitions, units etc., please ensure that either:
the plug is replaced by a fused 13 ampere rewireable plug bearing the BSI mark of approval.
or:
the mains cable is wired directly into a 13 amp cable outlet, controlled by a switch, (in compliance with BS 5733) which is accessible without moving the appliance.

Disposing of the plug:
Ensure that before disposing of the plug itself, you make the pins unusable so that it cannot be accidentally inserted into a socket.

Instructions for connecting cable to an alternative plug:
Important: the wires in the mains lead are coloured in accordance with the following code:

Green & Yellow	**Earth**
Blue	**Neutral**
Brown	**Live**

As the colours of the wires in the lead may not correspond with the coloured markings identifying the terminals in your plug, proceed as follows:
Connect Green & Yellow wire to terminal marked E or ⏚ or coloured Green or Green & Yellow.
Connect Brown wire to terminal marked L or coloured Red.
Connect Blue wire to terminal marked N or coloured Black.
If a 13 amp plug (BS 1363) is used it must be fitted with a 13 amp fuse, either in the plug or adaptor or at the distribution board.
If you are in any doubt regarding the electrical supply to your machine, consult a qualified electrician before use.
How to connect an alternative plug:
The wires in this mains lead are coloured in accordance with the following code:

BLUE	**NEUTRAL (N)**
BROWN	**LIVE (L)**
GREEN & YELLOW	**EARTH (E)**

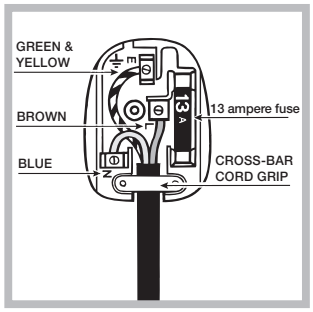

Disposing of the appliance:
When disposing of the appliance please remove the plug by cutting the mains cable as close as possible to the plug body and dispose of it as described above.

! The washing machine should not be installed in an outdoor environment, not even where the area is sheltered, because it may be very dangerous to leave it exposed to damp, rain and thunderstorms.

! When the washing machine is installed, the mains socket must be within easy reach.

! Do not use extensions or multiple sockets.

! The power supply cable must never be bent or dangerously compressed.

! The power supply cable must only be replaced by an authorised serviceman.

Warning! The company denies all liability if and when these norms are not respected.

The first wash cycle

Once the appliance has been installed, and before you use it for the first time, run a wash cycle with detergent and no laundry, using the wash cycle “Auto Clean” *(see “Cleaning the washing machine”).*

Technical data	
Model	XWDE 961680
Dimensions	width 59.5 cm height 85 cm depth 54 cm
Capacity	from 1 to 9 kg for wash programme from 1 to 6 kg for the drying programme
Electrical connections	please refer to the technical data plate fixed to the machine
Water connections	maximum pressure 1 MPa (10 bar) minimum pressure 0.05 MPa (0.5 bar) drum capacity 58 litres
Spin speed	up to 1600 rotations per minute
Energy rated programmes according to regulation EN 50229	**wash**: programme 10; temperature 60°C; using a load of 9 kg. **drying**: select the 10 wash programme and set the drying level to "", for both loads. The first drying cycle must be carried out with the nominal load.
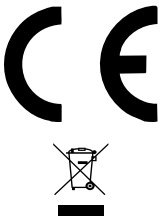	This appliance conforms to the following EC Directives: - EMC 2014/30/EU (Electromagnetic Compatibility) - LVD 2014/35/EU (Low Voltage) - 2012/19/EU (WEEE)

Care and maintenance

GB

Cutting off the water and electricity supplies

- Turn off the water tap after every wash cycle. This will limit wear on the hydraulic system inside the washer-dryer and help to prevent leaks.
- Unplug the washer-dryer when cleaning it and during all maintenance work.

Cleaning the washer-dryer

- The outer parts and rubber components of the appliance can be cleaned using a soft cloth soaked in lukewarm soapy water. Do not use solvents or abrasives.
- The washer-dryer has a "Auto Clean" programme for its internal parts that **must be run with no load in the drum**.

For maximum performance you may want to use either the detergent (i.e. a quantity 10% the quantity specified for lightly-soiled garments) or special additives to clean the washer-dryer. We recommend running a cleaning programme every 40 wash cycles. To start the programme press buttons **A** and **B** simultaneously for 5 seconds *(see figure).* The programme will start automatically and will last approximately 70 minutes. To stop the cycle press the START/PAUSE button.

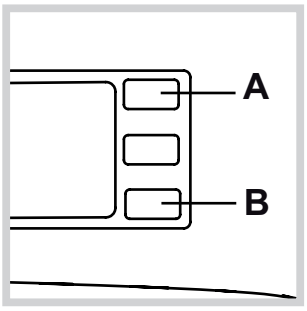

Cleaning the detergent dispenser drawer

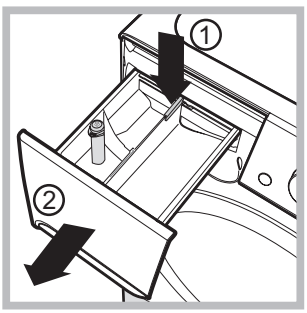

To remove the drawer, press lever (1) and pull the drawer outwards (2) *(see figure).* Wash it under running water; this procedure should be repeated frequently.

Caring for the door and drum of your appliance

- Always leave the porthole door ajar in order to prevent unpleasant odours from forming.

Cleaning the pump

The washer-dryer is fitted with a self-cleaning pump which does not require any maintenance. Sometimes, small items (such as coins or buttons) may fall into the protective pre-chamber at the base of the pump.

! Make sure the wash cycle has finished and unplug the appliance.

To access the pre-chamber:

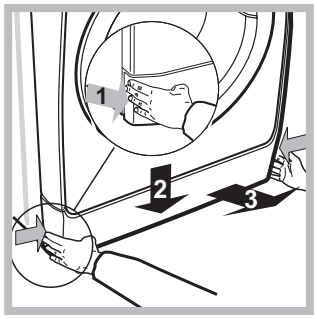

1. Take off the cover panel on the front of the machine by first pressing it in the centre and then pushing downwards on both sides until you can remove it *(see figures).*

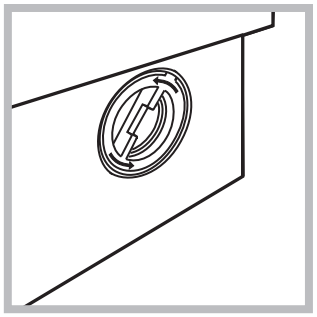

2. Unscrew the lid by rotating it anti-clockwise (*see figure*)*:* a little water may trickle out. This is perfectly normal.

3. Clean the inside thoroughly.
4. Screw the lid back on.
5. Reposition the panel, making sure the hooks are securely in place before you push it onto the appliance.

Checking the water inlet hose

Check the inlet hose at least once a year. If there are any cracks, it should be replaced immediately: during the wash cycles, water pressure is very strong and a cracked hose could easily split open.

! Never use second-hand hoses.

Precautions and tips

INDESIT

GB

! This washer-dryer was designed and constructed in accordance with international safety regulations. The following information is provided for safety reasons and must therefore be read carefully.

General safety

- This appliance was designed for domestic use only.
- This appliance can be used by children aged from 8 years and above and persons with reduced physical, sensory or mental capabilities or lack of experience and knowledge if they have been given supervision or instruction concerning use of the appliance in a safe way and understand the hazards involved. Children shall not play with the appliance. Cleaning and user maintenance shall not be made by children without supervision.
  – Do not dry unwashed items in the tumble dryer.
  – Items that have been soiled with substances such as cooking oil, acetone, alcohol, petrol, kerosene, spot removers, turpentine, waxes and wax removers should be washed in hot water with an extra amount of detergent before being dried in the tumble dryer.
  – Items such as foam rubber (latex foam), shower caps, waterproof textiles, rubber backed articles and clothes or pillows fitted with foam rubber pads should not be dried in the tumble dryer.
  – Fabric softeners, or similar products, should be used as specified by the fabric softener instructions.
  – The final part of a tumble dryer cycle occurs without heat (cool down cycle) to ensure that the items are left at a temperature that ensures that the items will not be damaged.
  WARNING: Never stop a tumble dryer before the end of the drying cycle unless all items are quickly removed and spread out so that the heat is dissipated.
- Do not touch the machine when barefoot or with wet or damp hands or feet.
- Do not pull on the power supply cable when unplugging the appliance from the electricity socket. Hold the plug and pull.
- Do not open the detergent dispenser drawer while the machine is in operation.
- Do not touch the drained water as it may reach extremely high temperatures.
- Never force the porthole door. This could damage the safety lock mechanism designed to prevent accidental opening.
- If the appliance breaks down, do not under any circumstances access the internal mechanisms in an attempt to repair it yourself.
- Always keep children well away from the appliance while it is operating.
- The door can become quite hot during the wash cycle.
- If the appliance has to be moved, work in a group of two or three people and handle it with the utmost care. Never try to do this alone, because the appliance is very heavy.
- Before loading laundry into the washer-dryer, make sure the drum is empty.
- During the drying phase, the door tends to get quite hot.
- Do not use the appliance to dry clothes that have been washed with flammable solvents (e.g. trichlorethylene).
- Do not use the appliance to dry foam rubber or similar elastomers.
- Make sure that the water tap is turned on during the drying cycles.
- Children of less than 3 years should be kept away from the appliance unless continuously supervised.
- Remove all objects from pockets such as lighters and matches.

Disposal

- Disposing of the packaging materials: observe local regulations so that the packaging may be re-used.
- The European Directive 2012/19/EU on Waste Electrical and Electronic Equipment, requires that old household electrical appliances must not be disposed of in the normal unsorted municipal waste stream. Old appliances must be collected separately in order to optimise the recovery and recycling of the materials they contain and reduce the impact on human health and the environment. The crossed out “wheeled bin” symbol on the product reminds you of your obligation, that when you dispose of the appliance it must be separately collected. Consumers should contact their local authority or retailer for information concerning the correct disposal of their old appliance.

Description of the washer-dryer

GB

Control panel

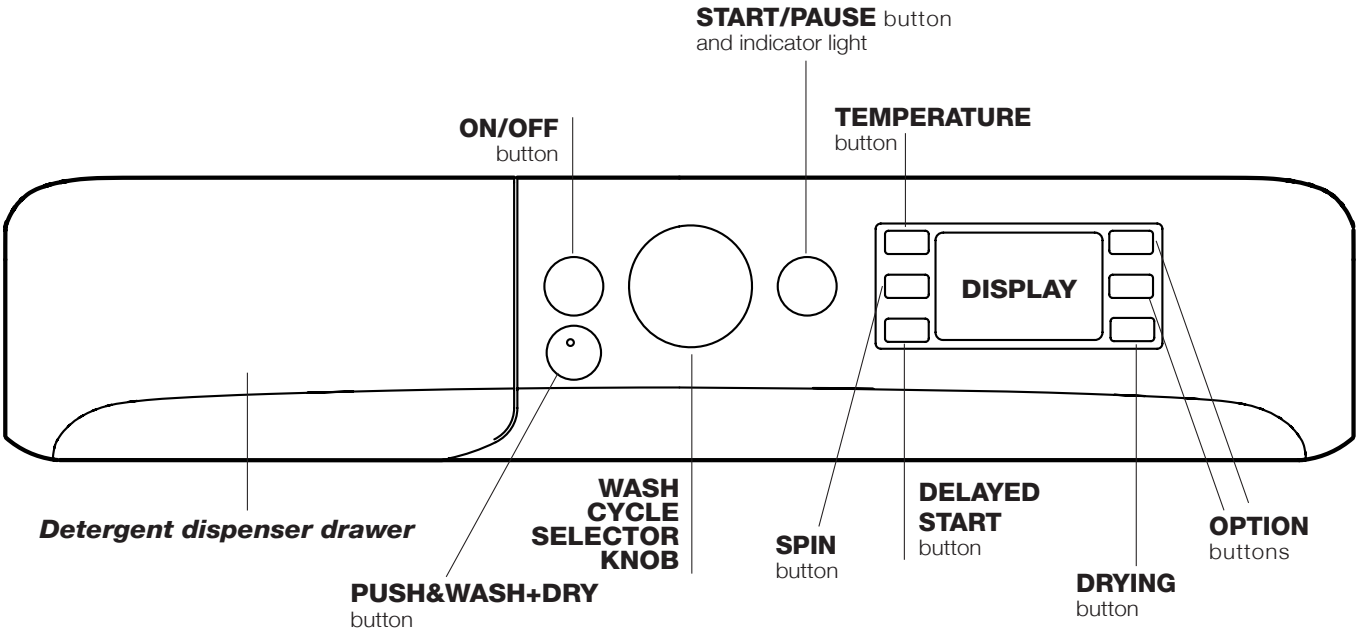

Detergent dispenser drawer: used to dispense detergents and washing additives (*see "Detergents and laundry"*).

ON/OFF ⏻ button: press this briefly to switch the machine on or off. The START/PAUSE indicator light which flashes slowly in a green colour shows that the machine is switched on. To switch off the washer-dryer during the wash cycle, press and hold the button for approximately 3 seconds; if the button is pressed briefly or accidentally the machine will not switch off.
If the machine is switched off during a wash cycle, this wash cycle will be cancelled.

PUSH&WASH+DRY button**:** (*see "Wash cycles and options"*).

WASH CYCLE SELECTOR KNOB: used to set the desired wash cycle *(see "Table of wash cycles"*).

OPTION buttons: press to select the available options. The indicator light corresponding to the selected option will remain lit.

TEMPERATURE °C button: press to reduce or completely exclude the temperature; the value appears on the display.

SPIN ◎ button: press to reduce or completely exclude the spin cycle; the value appears on the display.

DELAYED START button: press to set a delayed start for the selected wash cycle; the delay period appears on the display.

DRYING button **:** press to decrease or exclude drying; the selected drying level or time will appear on the display *(see "How to run a wash cycle or a drying cycle").*

START/PAUSE ▷II button and indicator light: when the green indicator light flashes slowly, press the button to start a wash cycle. Once the cycle has begun the indicator light will remain lit in a fixed manner. To pause the wash cycle, press the button again; the indicator light will flash in an amber colour. If the 🔒 symbol is not illuminated, the door may be opened. To start the wash cycle from the point at which it was interrupted, press the button again.

Standby mode
This washer-dryer, in compliance with new energy saving regulations, is fitted with an automatic standby system which is enabled after about 30 minutes if no activity is detected. Press the ON-OFF button briefly and wait for the machine to start up again.
Consumption in off-mode: 0,5 W
Consumption in Left-on: 8 W

Display

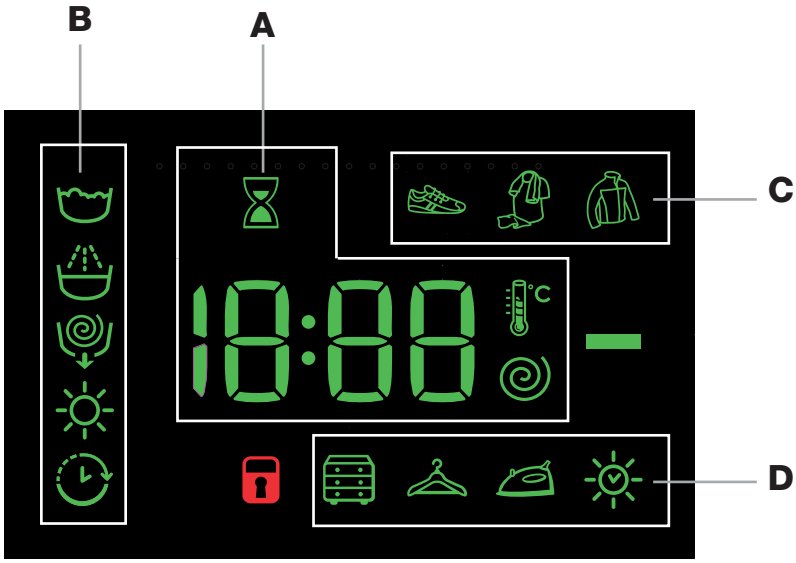

The display is useful when programming the machine and provides a great deal of information.

The duration of the available wash cycles and the remaining time of a running cycle appear in section **A**; if the DELAYED START option has been set, the countdown to the start of the selected wash cycle will appear.
Pressing the corresponding button allows you to view either the maximum spin speed, temperature and drying time values attained by the machine during the set wash cycle, or the values selected most recently (if compatible with the set wash cycle).
The hour-glass flashes while the machine processes the data on the basis of the selected programme. After a maximum of 10 minutes, the icon remains lit in a fixed manner and the final amount of time remaining is displayed. The hour-glass icon will then switch off approximately 1 minute after the final amount of time remaining has appeared.

The “wash cycle phases” corresponding to the selected wash cycle and the “wash cycle phase” of the running wash cycle appear in section **B**:

- Main wash
- Rinse
- Spin/Drain
- Drying

The “delay” symbol, when lit, indicates that the set “delayed start” value has appeared on the display.

There are three levels in section **C** concerning the washing options.

Section **D** includes the icons related to the three different drying levels as well as the icon, which lights up when a timed drying option is set.

DOOR LOCKED indicator light:
The lit symbol indicates that the door is locked. To prevent any damage, wait until the symbol turns off before opening the door.
To open the door while a cycle is in progress, press the START/PAUSE button; if the DOOR LOCKED symbol is switched off the door may be opened.

How to run a wash cycle or a drying cycle

GB

Rapid programming

1. **LOAD THE LAUNDRY.** Open the porthole door. Load the laundry, making sure you do not exceed the maximum load value indicated in the table of programmes and wash cycles on the following page.
2. **ADD THE DETERGENT.** Pull out the detergent dispenser drawer and pour the detergent into the relevant compartments as described in "*Detergents and laundry*".
3. **CLOSE THE DOOR.**
4. Press the "PUSH&WASH+DRY" button to start the programme.

Traditional programming

1. **SWITCH THE MACHINE ON.** Press the ⏻ button; the START/PAUSE indicator light will flash slowly in a green colour.
2. **LOAD THE LAUNDRY.** Open the porthole door. Load the laundry, making sure you do not exceed the maximum load value indicated in the table of programmes and wash cycles on the following page.
3. **ADD THE DETERGENT.** Pull out the detergent dispenser drawer and pour the detergent into the relevant compartments as described in "*Detergents and laundry*".
4. **CLOSE THE DOOR.**
5. **SELECT THE WASH CYCLE.** Use the WASH CYCLE SELECTOR knob to select the desired wash cycle. A temperature and spin speed is set for each wash cycle; these values may be adjusted. The duration of the cycle will appear on the display.
6. **CUSTOMISE THE WASH CYCLE.** Use the relevant buttons:

   Modify the temperature and/or spin speed. The machine automatically displays the maximum temperature and spin speed values set for the selected cycle, or the most recently-used settings if they are compatible with the selected cycle. The temperature can be decreased by pressing the °C button, until the cold wash "OFF" setting is reached. The spin speed may be progressively reduced by pressing the button, until it is completely excluded (the "OFF" setting). If these buttons are pressed again, the maximum values are restored.

   Setting the drying cycle
   The first time the button is pressed, the machine will automatically select the maximum drying cycle which is compatible with the selected wash cycle. Subsequent presses will decrease the drying level and then the drying time, until the cycle is excluded completely ("**OFF**").
   Drying may be set as follows:
   A- Based on the desired laundry dryness level:
   Cupboard : suitable for laundry which can be put back in a cupboard without being ironed.
   Hanger : ideal for clothes which do not need to be dried fully.
   Iron : suitable for clothes which will need ironing afterwards. the remaining dampness softens creases, making them easier to remove.
   B - Based on a set time period: between **210** and **30** minutes
   If your laundry load to be washed and dried is much greater than the maximum stated load *(see adjacent table of wash cycles)*, perform the wash cycle, and when the cycle is complete, divide the garments into groups and put some of them back in the drum. At this point, follow the instructions provided for a "**Drying only**" cycle. Repeat this procedure for the remainder of the load.
   Note: a cooling-down period is always added to the end of each drying cycle.

   Drying only
   Press button to perform the drying-only cycle. After selecting the desired cycle (compatible with the type of garments), press button to exclude the washing phase and start the drying phase at the maximum level for the selected cycle. The drying level or time may be set and changed by pressing the drying button .
   (Not compatible with cycles 13 and 14).

   Setting a delayed start.
   To set a delayed start for the selected cycle, press the corresponding button repeatedly until the required delay period has been reached. When this option has been activated, the symbol lights up on the display. To remove the delayed start setting, press the button until the text "OFF" appears on the display.

   Modify the cycle settings.
   - Press the button to enable the option; the indicator light corresponding to the button will switch on.
   - Press the button again to disable the option; the indicator light will switch off.

   ! If the selected option is not compatible with the set wash cycle, the indicator light will flash and the option will not be activated.
   ! The options may affect the recommended load value and/or the duration of the cycle.
7. **START THE WASH CYCLE.** Press the START/PAUSE button. The corresponding indicator light will turn green, remaining lit in a fixed manner, and the door will be locked (the DOOR LOCKED symbol will be lit). To change a wash cycle while it is in progress, **pause the washer-dryer** using the START/PAUSE button (the START/PAUSE indicator light will flash slowly in an amber colour); then select the desired cycle and press the START/PAUSE button again. To open the door while a cycle is in progress, press the START/PAUSE button; if the DOOR LOCKED symbol is switched off the door may be opened. Press the START/PAUSE button again to restart the wash cycle from the point at which it was interrupted.
8. **THE END OF THE WASH CYCLE.** This will be indicated by the text "**END**" on the display; when the DOOR LOCKED symbol switches off the door may be opened. Open the door, unload the laundry and switch off the machine.

! If you wish to cancel a cycle which has already begun, press and hold the ⏻ button. The cycle will be stopped and the machine will switch off.

Wash cycles and options

INDESIT

GB

Table of wash cycles

Wash cycles	Description of the wash cycle	Max. temp. (°C)	Max. speed (rpm)	Drying	Maximum load for drying (Kg)	Detergents		Maximum load for washing (Kg)	Duration of wash cycle
						Wash	Fabric softener		
	Special								The duration of the wash cycles can be checked on the display.
1	**Sport**	30°	600	●	3	●	●	4	
2	**Dark**	30°	800	●	3	●	●	5	
3	**Anti-odour** (Cotton)	60°	1000	●	3,5	●	●	3,5	
3	**Anti-odour** (Synthetic)	40°	1000	●	3	●	●	3,5	
4	**Delicate**	30°	0	●	1	●	●	1	
5	**Wool:** for wool, cashmere, etc.	40°	800	●	2	●	●	2	
6	**Rapid 30'**	30°	800	●	3,5	●	●	3,5	
	Standard								
7	**White Cotton 90°C:** extremely soiled whites.	90°	1600	●	6	●	●	9	
8	**Synthetic:** heavily soiled resistant colours.	60°	1000	●	4	●	●	4,5	
9	**Coloured**	40°	1600	●	6	●	●	9	
10	**Eco Cotton 60°C (1):** heavily soiled whites and resistant colours.	60°	1600	●	6	●	●	9	
10	**Eco Cotton 40°C (2):** lightly soiled whites and delicate colours.	40°	1600	●	6	●	●	9	
11	**Eco Cotton 20°C:** lightly soiled whites and delicate colours.	20°	1600	●	6	●	●	9	
12	**Eco Synthetic 20°C**	20°	1000	●	6	●	●	9	
	Automatic								
13	**Wash&Dry 45'**	30°	1600	●	1	●	●	1	
14	**AirFresh**	-	-	●	1,5	-	-	-	
	Partials								
	Rinse	-	1600	●	6	-	●	9	
	Spin + Drain	-	1600	●	6	-	-	9	
	Drain only *	-	OFF	-	-	-	-	9	

*** If you select programme and exclude the spin cycle, the machine will drain only.**

The length of cycle shown on the display or in this booklet is an estimation only and is calculated assuming standard working conditions. The actual duration can vary according to factors such as water temperature and pressure, the amount of detergent used, the amount and type of load inserted, load balancing and any wash options selected.

For all Test Institutes:
1) Test wash cycle in compliance with regulation EN 50229: select wash cycle 10 with a temperature of 60°C.
2) Long wash cycle for cottons: select wash cycle 10 with a temperature of 40.

Wash options

! If the selected option is not compatible with the set wash cycle, the indicator light will flash and the option will not be activated.

Sport

This option allows for selecting the most suitable programme for any type of sports clothing, and is designed to remove dirt while optimally preserving the technical features of the garments. The various Sport option levels offer the following wash cycles:
- **Sport Shoes**, a cycle designed to safely wash up to 2 pairs of sports shoes simultaneously.
N.B.: to dry 1 pair of shoes, we recommend setting drying time to 120'; to dry 2 pairs set it to 180'.
- **Gym Kit**, a cycle designed to simultaneously wash any type of sports clothing together with gym towels (Temperature 40°).
- **Technical Wear**, designed for specifically washing waterproof garments or clothing with special technical fibres like Gore-Tex, so as to optimise washing performance while preserving their technical properties over time. Do not use fabric softeners for garments with technical fibres.

Push&Wash+Dry

This function makes it possible to start an automatic wash and drying cycle either when the machine is off without having to press the ON/OFF button in advance, or after switching on the machine without having activated any button and/or selector (otherwise the Push&Wash+Dry function will be deactivated). To start the Push&Wash+Dry cycle press and hold the button for 2 seconds. The indicator lights up to show that the cycle has started. The wash and drying cycle is ideal for cotton or synthetic fabrics, as it washes them at a temperature of 30° and a maximum spin speed of 1000 rpm. During the drying cycle the maximum temperature is 60°C. At the end of the cycle the residual humidity will be the same as for the "⚊" level. Max recommended load 3 kg.
The time displayed is the maximum time allowed by the Push&Wash+Dry cycle. If the load is lower than the maximum load or most garment are made of synthetic materials, the actual time of the cycle will be shorter.

How does it work?

1. Load the laundry (cotton and/or synthetic garments) and close the door.
2. Pour the detergent and/or additives.
3. Start the cycle by pressing and holding the Push&Wash+Dry button for 2 seconds. The relevant indicator light will turn green and the door will lock (the DOOR LOCKED symbol is lit).
NB: starting the cycle through the Push&Wash+Dry button activates an automatic non-customisable wash and drying cycle recommended for cotton and synthetic fabrics.
4. The automatic cycle can be used only for washing, excluding the drying phase. Press the Push&Wash+Dry button and then the drying button ☼: the drying icon of the "⚊" level will switch off. Maximum load for washing-only is 4 kg. The cycle cannot be customised further.
To open the door while an automatic cycle is under way, press the START/PAUSE button. If the DOOR LOCKED symbol is off, the door may be opened only during the washing phase. Press the START/PAUSE button again to restart the wash cycle from the point at which it was interrupted.
5. At the end of the wash cycle the word END will light up.

Detergents and laundry

Detergent dispenser drawer

Successful washing results also depend on the correct dose of detergent: adding too much detergent will not necessarily result in a more efficient wash, and may in fact cause build up on the inside of your appliance and contribute to environmental pollution.

! Do not use hand washing detergents because these create too much foam.

! Use powder detergent for white cotton garments, for pre-washing, and for washing at temperatures over 60°C.

! Follow the instructions given on the detergent packaging.

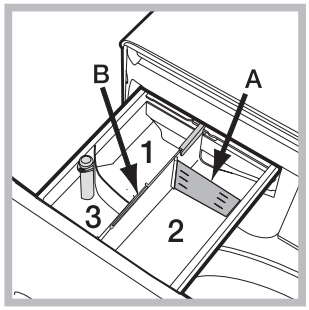

Open the detergent dispenser drawer and pour in the detergent or washing additive, as follows.

! Do not pour detergent into the compartment **1**.

Detergent should only be poured into the compartment **2**.

Compartment 2: Washing detergent (powder or liquid)

If liquid detergent is used, it is recommended that the removable plastic partition **A** (supplied) be used for proper dosage. If powder detergent is used, place the partition into slot **B**.

Compartment 3: Additives (fabric softeners, etc.)

The fabric softener must not exceed the "max" level indicated on the central pin.

Preparing the laundry

- Divide the laundry according to:
  - the type of fabric/the symbol on the label
  - the colours: separate coloured garments from whites.
- Empty all garment pockets and check the buttons.
- Do not exceed the values listed in the *"Table of wash cycles"*, which refer to the weight of the laundry when dry.

How much does your laundry weigh?

1 sheet 400-500 g
1 pillow case 150-200 g
1 tablecloth 400-500 g
1 bathrobe 900-1.200 g
1 towel 150-250 g

Special wash cycles

Sport (programme **1**) is designed for washing lightly soiled sports clothing (tracksuits, shorts, etc.); for best results, we recommend not exceeding the maximum load indicated in the *"Table of wash cycles"*. We recommend using liquid detergent, and adding the amount suitable for a half-load.

Dark: use programme **2** to wash dark-coloured garments. This programme is designed to maintain dark colours over time. We recommend using a liquid detergent for the best results when washing dark-coloured garments.

When you select the drying function, at the end of the washing cycle the machine will automatically perform a delicate drying cycle that preserves the colours of the garments. The display will show the level "".

Max. load: 3 kg.

Anti-odour: use programme **3** for washing garments with bad odours (e.g. smoke, sweat, fried food). The programme is designed to remove bad odours while preserving the fabric fibres. Synthetics fabrics or mixed loads should be washed at 40°, and resistant cotton fabrics at 60°.

Delicate: use programme **4** to wash very delicate garments. It is advisable to turn the garments inside out before washing them. For best results, use liquid detergent on delicate garments.

When selecting an exclusively time-based drying function, a drying cycle is performed at the end of the wash cycle that is particularly delicate, thanks to light handling and appropriate temperature control of the water jet.

The recommended durations are:

1 kg of synthetic garments --> 150 min
1 kg of synthetic and cotton garments --> 180 min
1 kg of cotton garments --> 180 min

The degree of dryness depends on the load and fabric composition.

Wool - *Woolmark Apparel Care - Blue*:
the wool wash cycle of this machine has been approved by The Woolmark Company for the washing of wool garments labelled as "hand wash" provided that the products are washed according to the instructions on the garment label and those issued by the manufacturer of this washing machine (M1318)



In UK, Eire, Hong Kong and India the Woolmark trade mark is a Certification trade mark.

Rapid 30' (programme **6**) this programme is designed to wash lightly soiled garments at 30° (excluding wool and silk) with a 3 kg maximum load in a short time: it only lasts 30 minutes and allows for saving time and energy.

Coloured: use this programme **9** to wash bright coloured clothes. The programme is designed to maintain bright colours over time.

Eco Cotton 20°C (programme **11**) ideal for lightly soiled cotton loads. The effective performance levels achieved at cold temperatures, which are comparable to washing at 40°, are guaranteed by a mechanical action which operates at varying speed, with repeated and frequent peaks.

Eco Synthetic 20°C (programme **12**) ideal for mixed loads (cotton and synthetics) with a normal soil level. The effective performance levels achieved at cold temperatures are guaranteed by a mechanical action which operates at varying speed, across set average intervals.

Wash&Dry 45' select programme **13** for washing and drying lightly soiled garments (Cotton and Synthetic) in a short time. This cycle may be used to wash and dry a laundry load of up to 1 kg in just 45 minutes. To achieve optimum results, use liquid detergent and pre-treat cuffs, collars and stains.
AirFresh (programme **14**) ideal cycle to refresh garments and remove bad odours, in particular smoke, from cotton and synthetic items in 30' (max 1.5 kg) without the washing phase.

Load balancing system

Before every spin cycle, to avoid excessive vibrations before every spin and to distribute the load in a uniform manner, the drum rotates continuously at a speed which is slightly greater than the washing rotation speed. If, after several attempts, the load is not balanced correctly, the machine spins at a reduced spin speed. If the load is excessively unbalanced, the washer-dryer performs the distribution process instead of spinning. To encourage improved load distribution and balance, we recommend small and large garments are mixed in the load.

Troubleshooting

INDESIT

GB

Your washing machine could occasionally fail to work. Before contacting the Technical Assistance Service (*see " Service"*), make sure that the problem cannot be solved easily using the following list.

Problem:	Possible causes / Solutions:
The machine does not switch on.	• The appliance is not plugged into the socket fully, or not enough to make contact. • There is no power to the socket, or the fuse has blown in the mains plug.
The wash cycle does not start.	• The door is not closed properly. • The ON/OFF button has not been pressed. • The START/PAUSE button has not been pressed. • The water tap has not been turned on to allow water to flow into the machine. • A delayed start has been set.
The washer-dryer does not dry.	• Check the 2 sections above. • The "Drying" is set to "OFF".
The machine does not fill with water or 'H20' in the display.	• The water inlet hose is kinked. • The water inlet hose is not connected to the water supply. • The water pressure is too low. • The water tap has not been turned on to allow water to flow into the machine. • There is no water supply to the house. • The inlet valve filter is blocked. • The START/PAUSE button has not been pressed.
The machine continuously fills with water and continually drains away or Water left in the drum or Stuck on wash.	• The top of the drain hose is too low - It must be fitted at a height between 65 and 100 cm from the floor *(see "Installation")*. • The drain hose is connected incorrectly to the sink trap allowing water to run into the machine, the drain hose must be positioned higher than the bottom of the sink to prevent water flowing down the drain hose. • The end of the drain hose has been pushed too far down the standpipe, the 'U' bracket should be fitted 100 mm from the end of the drain hose.
The machine does not drain or spin - (error lights flashing).	• The Pump filter is blocked. • The drain hose is kinked *(see "Installation").* • New Installation - The blanking cap or spigot has not been removed if connected under a sink. • The drain hose or sink trap is blocked.
The machine does spin.	• The "Spin Speed" is set to "OFF".
The machine does not heat or poor wash results.	• The 'Temperature' is set to "OFF".
The programme takes too long.	• Programme times will vary due to water pressure, the incoming water temperature and if the wash load goes out of balance. This will increase the programme times accordingly (see *' The machine wont spin properly'* next page).
The Display sticks at one 'time to end' for more than 1 Minute or the Display changes the estimated 'Time to End' during the programme.	• The display time is for guidance only - ***it is not a precise time to finish and may vary***.
The machine vibrates a lot during the spin cycle.	• The feet have not been adjusted, enabling the machine to rock. • New Installation - Either the Transit Bolts including the plastic spacers, or the Polystyrene Packaging have not been removed when installing the machine. • The machine is trapped between cabinets and/or walls. • The load is in a slight out of balance condition and machine is spinning, but at a lower speed.
Push&Wash+Dry does not activate.	• After switching on the machine a control other than Push&Wash+Dry was activated. Switch the machine off and press the Push&Wash+Dry button.

GB

The machine is noisy.	• There will always be some motor, pump and drum noise during spin.
The machine wont spin properly.	• Out of Balance detected when attempting to go into a spin cycle - If this happens the machine will continue to try to repeat the distribution of the load required before the machine will go into higher spin speeds - This will increase the programme time accordingly. This is a safety feature to prevent damage. Out of Balance can be caused by washing a single heavy item (eg duvet, quilt, etc). - Try the programme again using a different load.
The machine leaks from the dispenser.	• The dispenser drawer is blocked with detergent and requires cleaning. • The water pressure is too high and requires turning down - turn down the tap on the water supply pipe slightly and try again. • The machine is tilting forwards - It must be level when in its final position.
The machine leaks (other than dispenser).	• The fill hose is loose, check both the cabinet and tap ends. • The fill hose is tight but still leaks, if so replace the rubber washers, or the fill hose is missing the rubber washer. • The drain hose is not fixed in properly.
The option lights and the START/ PAUSE indicator light are flash rapidly and an error code appears on the display (eg F-01, F-..).	• Switch off the machine and unplug it, wait for approximately 1 minute and then switch back on again. If the problem persists contact Technical Assistance Centre.
The machine smells.	• The machine requires a service wash. Run a “Auto Clean” wash cycle with detergent and no laundry.
The machine door cannot be opened.	• The door will not open until the door lock indicator light goes out shortly after the program has finished. • If there is no power to the machine you need to perform the manual unlocking procedure.
Door Seal damaged at the bottom.	• The door seal has drainage holes at the bottom - This is normal.
The water level is too low when the machine is washing.	• The water level is correct if it can be seen at the bottom of the door.
There is too much foam.	• The detergent is not suitable for machine washing (it should display the text ‘for washing machines’ or ‘hand and machine wash’ or the like). • Too much detergent was used - less detergent is required in soft water.
After completing the programme, or before starting a programme, the machine has turned itself off (no lights).	• To comply with new energy saving regulations the machine is fitted with an automatic standby system. Press ‘ON/OFF’ button for 3 seconds to activate the machine, it can then either be switched off or a new programme selected.
General.	• Your washing machine contains sensors that monitor progress during the wash cycle (eg: Water Levels, Temperatures, Out of Balance loads, Wash time/progress). Normally, if your machine successfully completes the cycle, there is unlikely to be anything wrong!

Remember, you will be charged for a service call for problems caused by incorrect installation, as indicated on pages 2 to 4.

Not emptying contents from pockets may cause pump or drain blockages, or may damage the machine.

Do not wash items which do not have a wash label, or wash items that are not intended as machine washable.

Product Guarantee and Repair Information

INDESIT

GB

Guarantee

12 Months Parts and Labour Guarantee

Your appliance has the benefit of our manufacturer's guarantee, which covers the cost of breakdown repairs for twelve months from the date of purchase. This gives you the reassurance that if, within that time, your appliance is proven to be defective because of either workmanship or materials, we will, at our discretion, either repair or replace the appliance at no cost to you:

This guarantee is subject to the following conditions:

- The appliance has been installed and operated correctly and in accordance with our operating and maintenance instructions.
- The appliance is used only on the electricity or gas supply printed on the rating plate.
- The appliance has been used for normal domestic purposes only.
- The appliance has not been altered, serviced, maintained, dismantled, or otherwise interfered with by any person not authorised by us.
- Any repair work must be undertaken by us or our appointed agent.
- Any parts removed during repair work or any appliance that is replaced become our property.
- The appliance is used in the United Kingdom or Republic of Ireland.

The guarantee does not cover:

- Damage resulting from transportation, improper use, neglect or interference or as a result of improper installation.
- Replacement of any consumable item or accessory. These include but are not limited to: plugs, cables, batteries, light bulbs, fluorescent tubes and starters, covers and filters.
- Replacement of any removable parts made of glass or plastic.

THIS GUARANTEE WILL NOT APPLY IF THE APPLIANCE HAS BEEN USED IN COMMERCIAL OR NON-DOMESTIC PREMISES.

Recycling and Disposal Information

As part of Indesit's continued commitment to helping the environment, Indesit reserves the right to use quality, recycled components to keep down customer costs and minimise material wastage.
Please dispose of packaging and old appliances carefully. To minimise the risk of injury to children, remove the door, plug, and cut the mains cable off flush with the appliance. Dispose of these parts separately to ensure that the appliance can no longer be plugged into mains socket, and the door cannot be locked shut.

Repairs and After Sales

For product help and advice, repairs, spare parts or accessories, we're here to help.

For local repair engineers - **03448 111 606**
ROI - **0818 313 413**

UK standard local rate applies
ROI local Irish rate applies

For Parts and Accessories visit:
parts.indesit.co.uk/shop

Please remember to register your appliance at **www.indesitservice.co.uk** to activate your 10 year parts guarantee.

How to find your model and serial number:

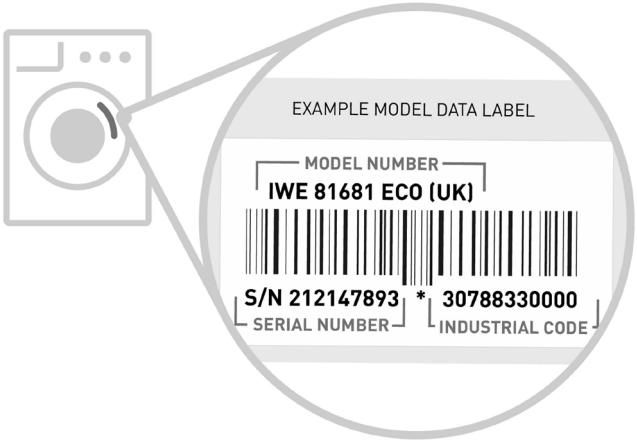

GB

Whirlpool EMEA S.p.A.
via Carlo Pisacane n.1,
20016 Pero (MI)
Italy
www.indesit.co.uk