INDESIT

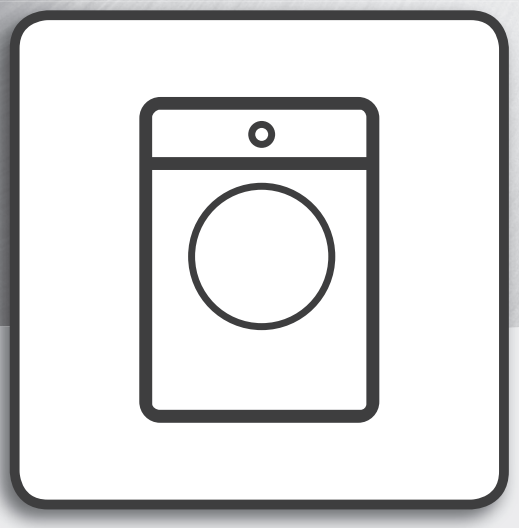

User Manual

www.indesit.com/register

THANK YOU FOR BUYING A INDESIT PRODUCT

In order to receive a more complete assistance, please register your product on **www.indesit.com/register**

Before using the appliance carefully read the Safety Instruction.
Before using the machine, it is imperative that the transport bolts are removed.
For more detailed instructions on how to remove them, see the Installation Guide.

CONTROL PANEL

1. ON/OFF button
2. START/PAUSE button with indicator light
3. WASH CYCLE PROGRESS indicator lights
4. DOOR LOCKED indicator light
5. FUNCTION buttons with indicator lights
6. CHILDLOCK button with indicator light
7. DELAY TIMER button
8. SPIN button
9. TEMPERATURE button
10. WASH CYCLE knob

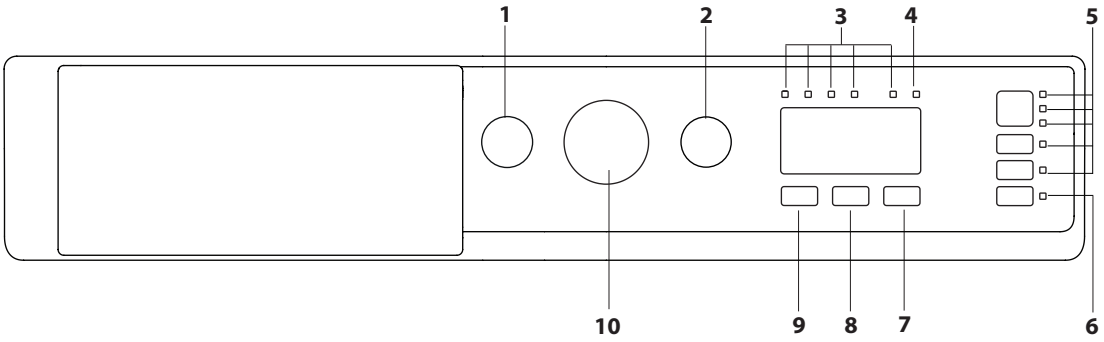

WASH CYCLE TABLE

Maximum load 7 kg
Power input in off mode 0,5 W / in left-on mode 8 W

	Wash cycle	Temperature		Maximum spin (r.p.m.)	Maximum load (kg)	Duration (minutes)	Detergents and Additives			Recommended detergent		Residual dampness %	Energy consumption kWh	Total water l
		Default	Range				Pre-wash	Wash	Fabric softener	Powder	Liquid			
							1	**2**	**3**					
1	**Mix Coloured 59'**	40°C	❄ – 40°C	1000	7	59	–	●	○	–	✔	–	–	–
2	**Cotton 59'**	60°C	❄ – 60°C	1000	7	59	–	●	○	✔	✔	–	–	–
3	**Synthetics 59'**	30°C	❄ – 30°C	1000	4	59	–	●	○	–	✔	–	–	–
4	**Daily 45'**	40°C	❄ – 40°C	1400	3,5	45	–	●	○	–	✔	–	–	–
5	**Mix 30'**	30°C	❄ – 30°C	800	3,5	30	–	●	○	–	✔	70	0,16	32,4
6	**Gym Kit**	40°C	❄ – 40°C	600	3,5	90	–	●	○	–	✔	–	–	–
7	**White**	60°C	❄ – 90°C	1400	7	135	●+90°	●	○	✔	✔	–	–	–
8	**Baby**	40°C	❄ – 40°C	800	3	85	–	●	○	–	✔	–	–	–
9	**Rinse**	–	–	1400	7	50	–	–	○	–	–	–	–	–
10	**Spin + Drain ***	–	–	1400	7	10	–	–	–	–	–	–	–	–
11	**Duvet**	30°C	❄ – 30°C	1000	2	110	–	●	○	–	✔	–	–	–
12	**Wool**	40°C	❄ – 40°C	800	1,5	70	–	●	○	–	✔	–	–	–
13	**Silk/Curtains**	30°C	❄ – 30°C	0	1	55	–	●	○	–	✔	–	–	–
14	**Eco Cotton 60°/40°(1)**	60°C	60°C	1400	7	185	–	●	○	✔	✔	53	1,11	52,5
			40°C	1400	7	220	–	●	○	✔	✔	53	0,97	75
15	**Cotton (2)**	40°C	❄ – 60°C	1400	7	220	–	●	○	✔	✔	53	0,97	75
16	**Synthetics (3)**	40°C	❄ – 60°C	1000	4	120	–	●	○	✔	✔	46	0,67	54,6

● Required dosage ○ Optional dosage

The cycle duration indicated on the display or instruction manual is an estimate based on standard conditions. The actual duration may vary in relation to several factors, such as the temperature and pressure of the incoming water, ambient temperature, amount of detergent, load quantity and type, load balancing and any additional options selected.

1) Test wash cycle in compliance with regulation 1061/2010:
This cycle is designed for normally soiled cotton loads and is the most efficient in terms of both electricity and water consumption; it should be used for garments washable at 60°C or at 40°C. The actual washing temperature may differ from the indicated value.

For all testing institutes:
2) Long cotton cycle: set cycle 15 at a temperature of 40°C.
3) Long synthetics cycle: set cycle 16 at a temperature of 40°C.

* By selecting the 10 cycle and excluding the spin cycle, the washing machine will drain only.

PRODUCT DESCRIPTION

1. Top
2. Detergent dispenser drawer
3. Control panel
4. Handle
5. Porthole door
6. Drain pump
7. Adjustable feet (4)

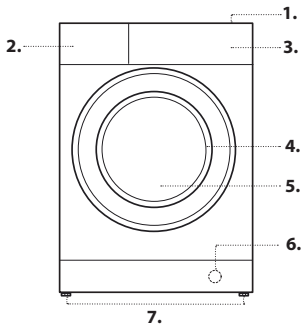

DETERGENT DISPENSER DRAWER

Compartment 1: Pre-wash detergent (powder)
Compartment 2: Washing detergent (powder or liquid)
Compartment 3: Additives (fabric softener, etc.)
The fabric softener must never exceed the "max" level indicated on the central pin.
! Use powder detergent for white cotton garments, for pre-washing, and for washing at temperatures over 60°C.
! Follow the instructions given on the detergent packaging.

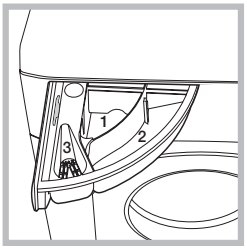

WASH CYCLES

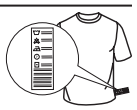

Follow the instructions on the symbols of the garment's wash care label. The value indicated in the symbol is the maximum recommended temperature for washing the garment.

Mix Coloured 59'

To wash mixed and coloured items together.

Cotton 59'

Cycle designed to wash cotton garments - mainly white items. It can be used with powder detergent too.

Synthetics 59'

Specific for synthetic items. If the dirt is difficult to remove, the temperature can be increased up to 60° and powder detergent can be used too.

Daily 45'

Short cycle designed to wash delicate cotton items.

Mix 30'

For washing lightly soiled garments in a short time. Not suitable for wool, silk and garments to be washed by hand.

Gym Kit

Cycle suitable to wash all sports items together, including gym towels, while respecting their fibres (follow the instructions in the garment labels).

White

For heavily soiled whites and resistant colours.

Baby

Cycle designed for dirt typical of children's garments in that it effectively removes any traces of residual detergent.

Rinse

Designed for rinsing and spinning.

Spin + Drain

Designed to spin and drain the water.

Duvet

For washing clothing padded with goose down, such as double or single duvets (weighing under 2 kg), cushions or down jackets. Duvets should be loaded into the drum with their edges folded inwards and no more than ¾ of the total drum volume should be used up. For best results, it is advisable to use liquid detergent to be poured into the detergent drawer.

Wool

all wool garments can be washed using programme, even those carrying the "hand-wash only" label. For best results, use special detergents and do not exceed 1,5 kg of laundry.

Silk

use special wash cycle to wash all silk garments. We recommend the use of special detergent which has been designed to wash delicate clothes.

Curtains

fold curtains and place them in a pillow case or mesh bag.

Eco Cotton 60°/40°

Suitable for washing moderately soiled cotton garments. At 40°C and 60°C it is the standard cycle for washing cotton garments, and is the most efficient in terms of combined water and electricity consumption.

Cotton

Suitable for washing towels, underwear, table cloths, etc. made of resistant linen and cotton that are moderately to heavily soiled.

Synthetics

Suitable for washing moderately soiled garments made of synthetic fibres (e.g. polyester, polyacrylic, viscose, etc.) or mixed synthetic-cotton fibres.

WASH CYCLE PHASE INDICATOR LIGHTS

Once the desired wash cycle has been selected and has begun, the indicator lights switch on one-by-one to indicate which phase of the cycle is currently in progress.

- Wash
- Rinse
- Spin
- Drain
- END End of Wash Cycle

DOOR LOCKED INDICATOR

When lit, the symbol indicates that the door is locked. To prevent any damage, wait until the symbol turns off before opening the door.
To open the door while a cycle is in progress, press the START/PAUSE ▷II button; if the indicator light is off, the door can be opened.

FIRST-TIME USE

Once the appliance has been installed, and before it is used for the first time, run a wash cycle with detergent and no laundry, by setting the "Auto-Clean" cycle.

DAILY USE

Prepare the laundry by following the suggestions appearing under the "TIPS AND SUGGESTIONS" section.
- Turn the washing machine on by pressing the ON/OFF ⏻ button. All the indicator lights will light up for a few seconds, then only the lights corresponding to the settings for the selected wash cycle will remain lit; the START/PAUSE ▷II indicator light will also flash.
- Open the door. Load the laundry while making sure not to exceed the maximum load quantity indicated in the Wash Cycle Table.
- Pull out the detergent dispenser drawer and pour the detergent into the relevant compartments as described in "DETERGENT DISPENSER DRAWER" section.
- Close the door.
- Set the WASH CYCLE knob to the desired cycle.
- Modify the temperature and/or spin: pressing the °C 40° 60° button allows for gradually reducing the temperature down to the cold wash level (20°C). The spin speed may be progressively reduced by pressing the button, until it is completely excluded (the "⊘" setting. If these buttons are pressed again, the maximum values are restored.
- Select the desired wash cycle.
- Select the desired options.
- Press the START/PAUSE ▷II button to start the wash cycle; the relative indicator light will light up steady green and the door will lock (indicator light on).

PAUSING A CYCLE

To pause the wash cycle, press the START/PAUSE ▷II button again; the indicator light will flash. If the indicator light is not lit, the door may be opened. To start the wash cycle from the point at which it was interrupted, press the START/PAUSE ▷II button again.

OPENING THE DOOR, IF NECESSARY

Once a cycle starts, the indicator light turns on to signal that the door cannot be opened. While a wash cycle is running, the door remains locked. To open the door while a cycle is under way, for example, to add or remove garments, press the START/PAUSE ▷II button to pause the cycle; the indicator light will flash. If the indicator light is not lit, the door may be opened. Press the START/PAUSE ▷II button again to continue the cycle.

CHANGING A RUNNING WASH CYCLE

To change a wash cycle while it is in progress, pause the washing machine using the START/PAUSE ▷II button (the relative indicator light will flash), then select the desired cycle and press the START/PAUSE ▷II button again.
! To cancel a cycle that has already begun, press and hold the ON/OFF ⏻ button.
The cycle will be stopped and the machine will switch off.

END OF THE CYCLE

Once the cycle terminates the END indicator light will light up; when the indicator light switches off, the door may be opened. Open the door, unload the laundry and switch off the machine. If you do not press "ON/OFF" ⏻ button, the washing machine will switch off automatically after about a half of an hour. Close the water tap, open the door and unload the washing machine. Leave the door ajar to allow the drum to dry.

FUNCTIONS

- If the selected option is not compatible with the set wash cycle, the indicator light will flash and the option will not be activated.
- If the selected option is not compatible with another previously selected option, the indicator light will flash accompanied by a buzzer, and only the latter option will be activated; the indicator light corresponding to the activated option will turn on.

Stain removal

This option allows for selecting the type of dirt so as to optimally adjust the cycle for removing the stains. The following types of dirt can be selected:
- **Food**: for stains caused by foodstuffs and beverages, for example.
- **Work**: for grease and ink stains, for example.
- **Outdoor**: for mud and grass stains, for example.

! The wash cycle duration varies according to the type of selected dirt.

Extra rinse
By selecting this option, the efficiency of the rinse is increased and optimal detergent removal is guaranteed. It is particularly useful for sensitive skin.

Easy iron
By selecting this function, the wash and spin cycles will be modified in order to limit the formation of creases. At the end of the cycle the washing machine's drum will rotate slowly; the EASY IRON and START/PAUSE ▷II indicator lights will flash and the END phase will remain lit steady. To end the cycle, press the START/PAUSE ▷II button or the EASY IRON button.

Delay start
To set a delayed start for the selected cycle, press the corresponding button repeatedly until the desired delay period has been reached (3h-6h-9h). When the button is pressed for the fourth time, the option will deactivate.
Once the START/PAUSE ▷II button has been pressed, the delay time can only be modified by decreasing it until the set cycle is launched.

Temperature °C 40° 60°
Each wash cycle has a pre-defined temperature. To modify the temperature, press the °C 40° 60° button.

Spin
Each wash cycle has a pre-defined spin speed. To modify the spin speed, press the button.

CHILD LOCK

to activate the control panel lock, press and hold the button for approximately 2 seconds. The lit symbol signals that the control panel is locked. This prevents wash cycles from being modified accidentally (except for the ON/OFF button), especially if there are children in the home. To deactivate the control panel lock, press and hold the button for approximately 2 seconds.

TIPS AND SUGGESTIONS

Divide the laundry according to:
Type of fabric (cotton, mixed fibres, synthetics, wool, garments to be hand-washed). Colour (separate coloured garments from whites, wash new coloured garments separately). Delicates (small garments – such as nylon stockings – and items with hooks – such as bras: insert them in a fabric bag).

Empty the pockets:
Objects such as coins or lighters can damage the washing machine and the drum. Check all buttons.

CARE AND MAINTENANCE

Before performing cleaning and maintenance, switch the washing machine off and disconnect it from the mains power. Do not use flammable liquids to clean the washing machine.

Disconnect the water and power supplies
Close the water tap after every wash. This will limit wear on the hydraulic system inside the washing machine and help to prevent leaks.
Unplug the washing machine when cleaning it and during all maintenance work.

Clean the washing machine
The outer parts and rubber components of the appliance can be cleaned using a soft cloth soaked in lukewarm soapy water. Do not use solvents or abrasives.
The washing machine has a "Auto-clean" cycle for its internal parts; it must be run without any load in the drum.
To optimise this cycle, it is possible to use either detergent (10% of the quantity specified for lightly soiled garments) or special additives to clean the washing machine. We recommend running a cleaning cycle every 40 wash cycles.
To start the cycle press buttons and simultaneously for 5 seconds. The cycle will start automatically and will run for about 70 minutes. To stop the cycle, press the START/PAUSE ▷II button.

Care for the door and drum
Always leave the porthole door ajar in order to prevent unpleasant odours from forming.

LOAD BALANCING SYSTEM

Before every spin cycle, to avoid excessive vibrations before every spin and to distribute the load in a uniform manner, the drum rotates continuously at a speed which is slightly greater than the washing rotation speed. If, after several attempts, the load is not balanced correctly, the machine spins at a reduced spin speed. If the load is excessively unbalanced, the washing machine performs the distribution process instead of spinning. To encourage improved load distribution and balance, we recommend small and large garments are mixed in the load.

TRANSPORT AND HANDLING

Do not lift the washing machine by gripping it from the upper section.
Unplug the appliance and close the water tap. Check that the door and detergent dispenser drawer are tightly closed. Detach the filling hose from the water tap then detach the drain hose. Empty all the water remaining in the hoses and secure the latter so that they do not get damaged during transport. Apply the transport bolts back on. Repeat, in reverse order, the transport bolt removal procedure described in the "Health & Safety and Installation Guides".

TROUBLESHOOTING

The washing machine may occasionally fail to work. Before contacting the Technical Assistance Service, make sure that the problem cannot be easily solved using the following list.

Anomalies	Possible causes / Solution
The washing machine does not start.	The appliance is not plugged into the socket, or not sufficiently to make contact.
	There is no power in the house.
The wash cycle does not start.	The washing machine door is not closed properly.
	The ON/OFF ⏻ button has not been pressed.
	The START/PAUSE ▷II button has not been pressed.
	The water tap has not been opened.
	A delay has been set for the start time.
The machine does not fill with water or the indicator light for the first wash cycle stage flashes rapidly.	The water inlet hose is not connected to the tap.
	The hose is bent.
	The water tap has not been opened.
	There is no water supply in the house.
	The pressure is too low.
	The START/PAUSE ▷II button has not been pressed.
The washing machine continuously loads and unloads water.	The drain hose is not fitted between 65 and 100 cm from the floor.
	The free end of the hose is immersed in water.
	The wall drainage system does not have a breather pipe. If the problem persists even after these checks, turn off the water tap, switch the appliance off and contact the Technical Assistance Service. If the home is on one of the upper floors of a building, there may be problems relating to back-siphonage, causing the washing machine to fill with water and drain continuously. Special anti-siphon valves are available in shops and help to prevent this inconvenience.
The washing machine does not drain or spin.	The cycle does not include drainage: with certain cycles it must be started manually.
	The drain hose is bent.
	The option is enabled: to complete the wash cycle, press the START/PAUSE ▷II button.
	The drainage duct is clogged.
The washing machine vibrates a lot during the spin cycle.	The drum was not unlocked correctly during installation.
	The washing machine is not level.
	The washing machine is tucked between furniture cabinets and the wall.
The washing machine leaks.	The water inlet hose is not screwed on properly.
	The detergent dispenser drawer is obstructed.
	The drain hose is not properly attached.
The "Options" lights and the START/PAUSE indicator light flash while one of the wash cycle progress and DOOR LOCKED lights are lit in a fixed manner.	Switch off the machine and unplug it, wait for approximately 1 minute and then switch it back on again. If the problem persists, contact the Technical Assistance Service .
There is too much foam.	The detergent is not suitable for machine washing (it should be marked with "for washing machine use" or "hand wash and machine wash" or similar).
	Too much detergent was used.

CLEANING & MAINTENANCE

For any cleaning and maintenance, switch off and unplug the washing machine.
Do not use flammable fluids to clean the washing machine.

CLEANING THE OUTSIDE OF THE WASHING MACHINE

Use a soft damp cloth to clean the outer parts of the washing machine.

Do not use glass or general purpose cleaners, scouring powder or similar to clean the control panel – these substances might damage the printing.

CHECKING THE WATER SUPPLY HOSE

Check the inlet hose regularly for brittleness and cracks. If damaged, replace it by a new hose available through our After-Sales Service or your specialist dealer.
Depending on the hose type:

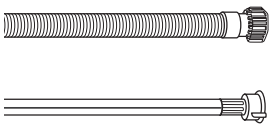

If the inlet hose has a transparent coating, periodically check if the colour intensifies locally. If yes, the hose may have a leak and should be replaced.

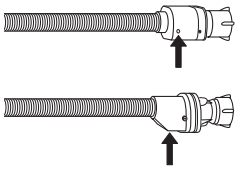

For water stop hoses: check the small safety valve inspection window (see arrow). If it is red, the water stop function was triggered, and the hose must be replaced by a new one.
For unscrewing this hose, press the release button (if available) while unscrewing the hose.

CLEANING THE MESH FILTERS IN THE WATER SUPPLY HOSE

1. Close water tap and unscrew the inlet hose.

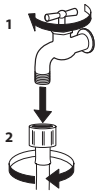

2. Clean the mesh filter at the hose's end carefully with a fine brush.

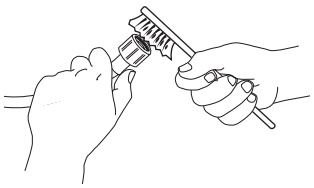

3. Now unscrew the inlet hose on the back of the washing machine by hand. Pull out the mesh filter from the valve on the back of the washing machine with pliers and carefully clean it.

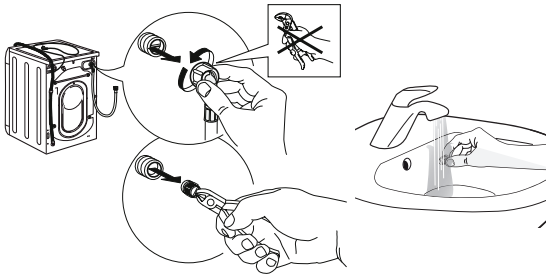

4. Insert the mesh filter again. Connect the inlet hose to water tap and washing machine again. Do not use a tool to connect the inlet hose. Open the water tap and check that all connections are tight.

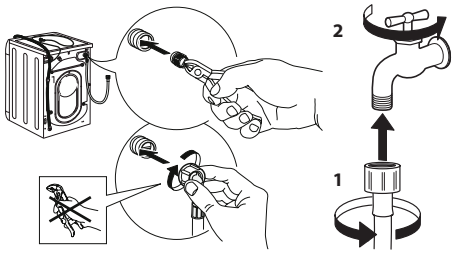

CLEANING THE DETERGENT DISPENSER

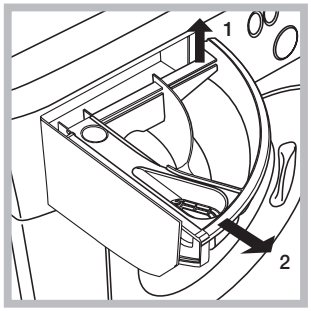

Remove the dispenser by raising it and pulling it out (see figure).
Wash it under running water; this operation should be repeated frequently.

CLEANING THE WATER FILTER / DRAINING RESIDUAL WATER

Switch off and unplug the washing machine before cleaning the water filter or draining residual water. If you used a hot wash programme, wait until the water has cooled down before draining any water.
Clean the water filter regularly, to avoid that the water cannot drain after the wash due to obstruction of the filter.
If the water cannot drain, the display indicates that the water filter may be clogged.

1. Container for the drained water:
Place a low and wide container under the water filter in order to collect the residual water.

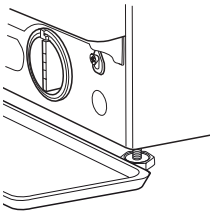

2. Drain the water:
Slowly turn the filter counter-clockwise until all the water has come out. Allow the water to flow out without removing the filter. Once the container is full, close the water filter by turning it clockwise. Empty the container. Repeat the procedure until all the water has been drained.

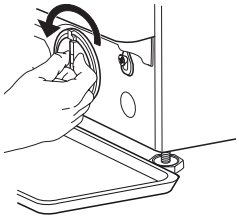

3. Remove filter: Lay a cotton cloth beneath the water filter, which can absorb a small amount of rest water. Then remove the water filter by turning it out anticlockwise.

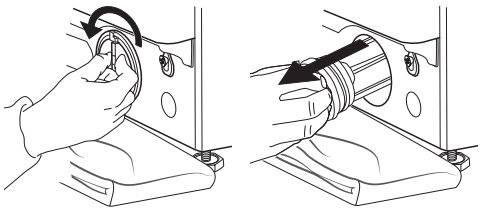

4. Clean the water filter: remove residues in the filter and clean it under running water.

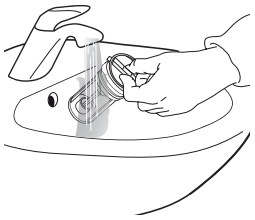

5. Insert the water filter: Reinsert the water filter again by turning it in clockwise direction. Make sure to turn it in as far as it goes; the filter handle must be in vertical position. To test water tightness of the water filter, you can pour about 1 liter of water into the detergent dispenser.

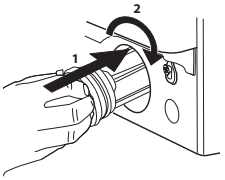

TRANSPORT AND HANDLING

Never lift the washing machine by holding it at the worktop.

1. Pull out the mains plug, and close the water tap.
2. Make sure that door and detergent dispenser are properly closed.
3. Disconnect the inlet hose from the water tap, and remove the drain hose from your draining point. Remove all rest water from the hoses, and fix them so that they cannot get damaged during transport.
4. Refit the transport bolts. Follow the instructions for removing the transport bolts in the “Installation Guide” in reverse order.

Important: Do not transport the washing machine without having fixed the transport bolts.

AFTER-SALES SERVICE

BEFORE CALLING THE AFTER-SALES SERVICE

1. See if you can solve the problem by yourself with the help of the suggestions given in the **TROUBLESHOOTING**
2. Switch the appliance off and back on again to see if the fault persists.

IF AFTER THE ABOVE CHECKS THE FAULT STILL OCCURS, GET IN TOUCH WITH THE NEAREST AFTER-SALES SERVICE

To receive assistance, call the number shown on the warranty booklet or follow the instructions on the website **http://docs.indesit.eu**

When contacting our Client After sales service, always specify:

- a brief description of the fault;
- the type and exact model of the appliance;

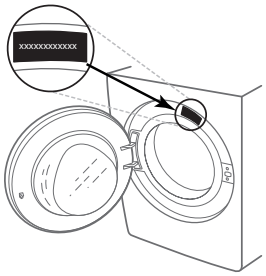

- the service number (number after the word Service on the rating plate).



- your full address;
- your telephone number.

If any repairs are required, please contact an authorised after-sales service (to guarantee that original spare parts will be used and repairs carried out correctly).

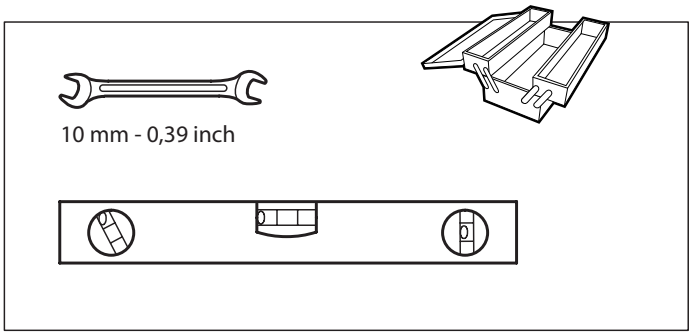

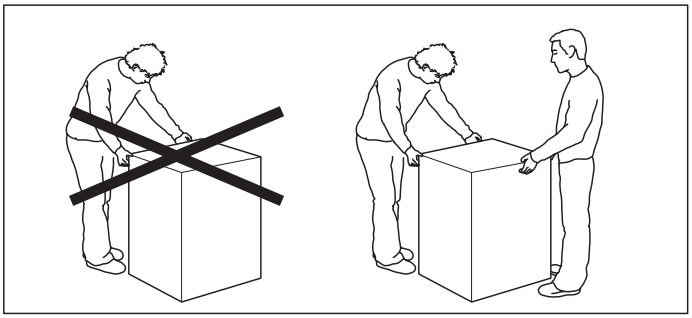

1.

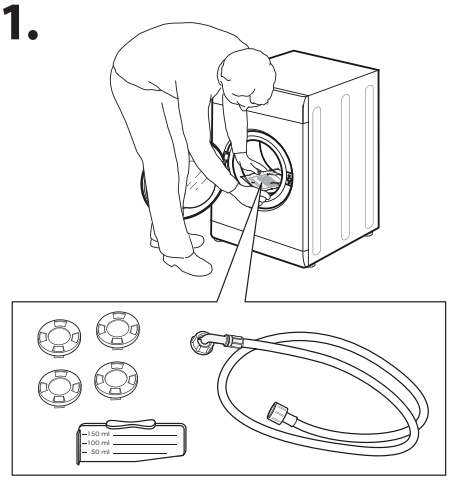

2.

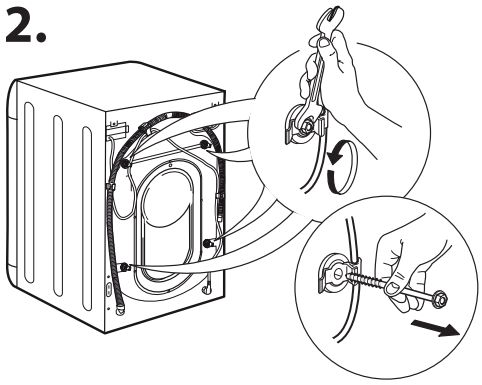

3.

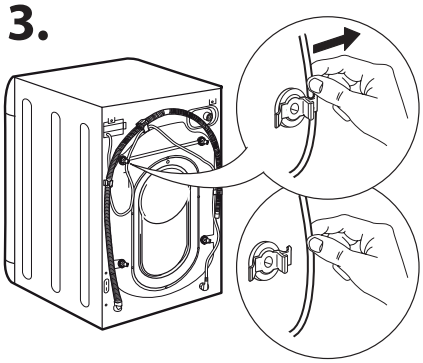

4.

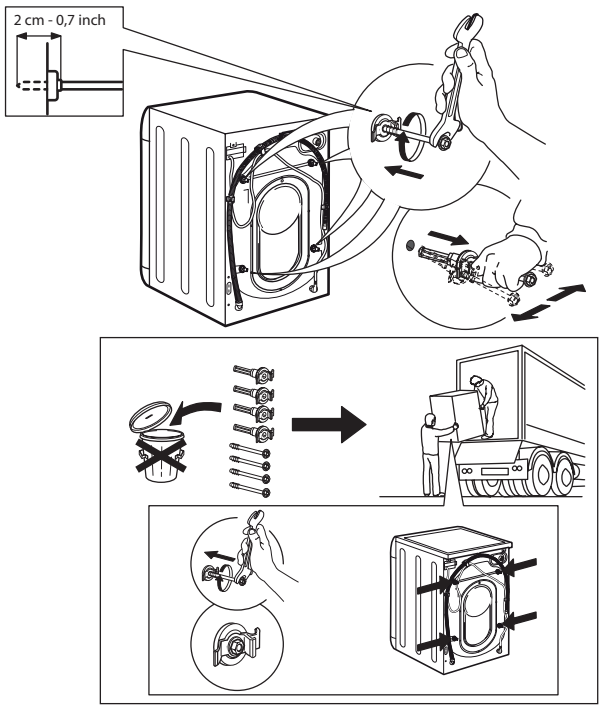

5.

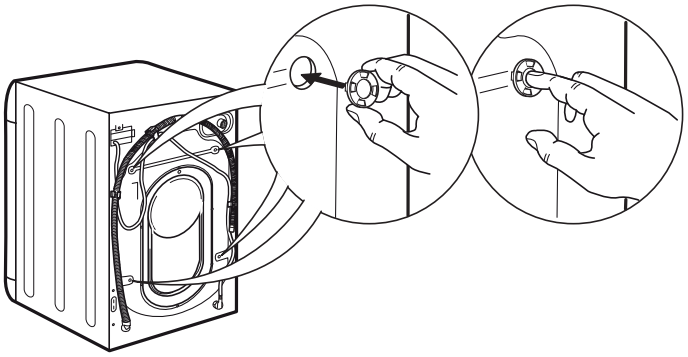

6.

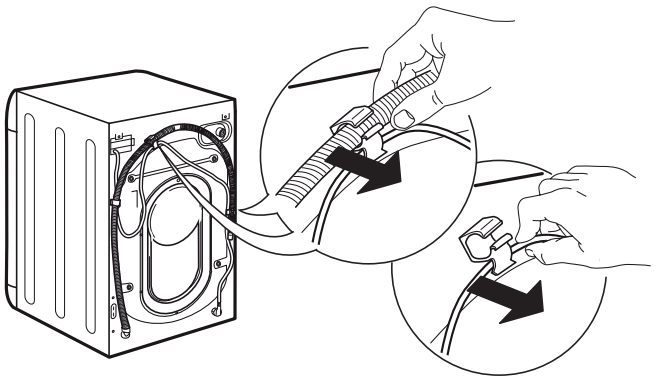

7.

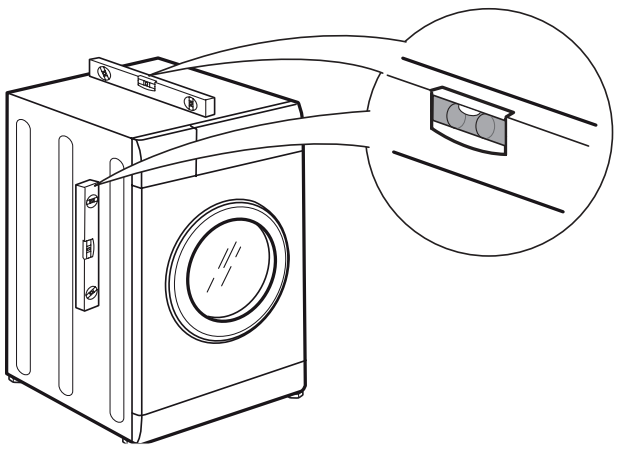

8.

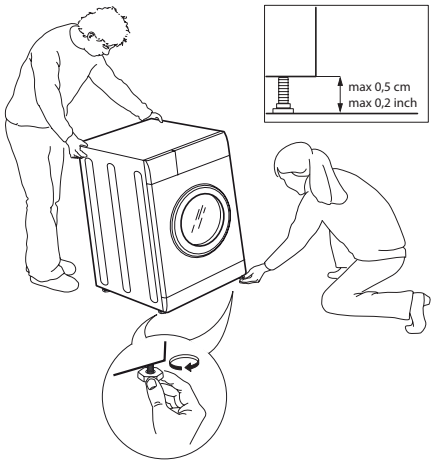

9.

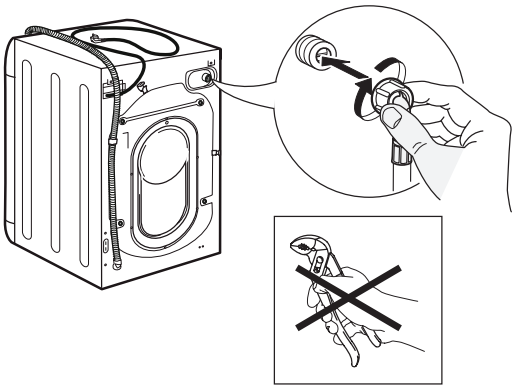

10.

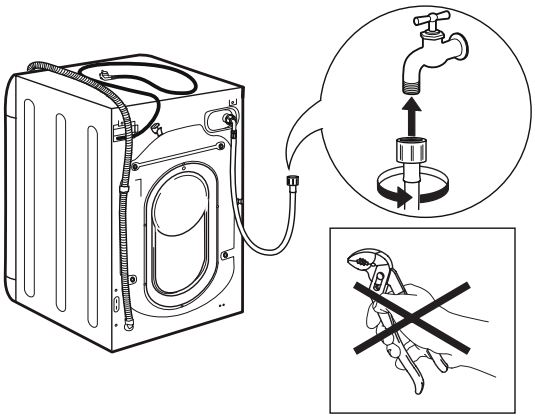

11.

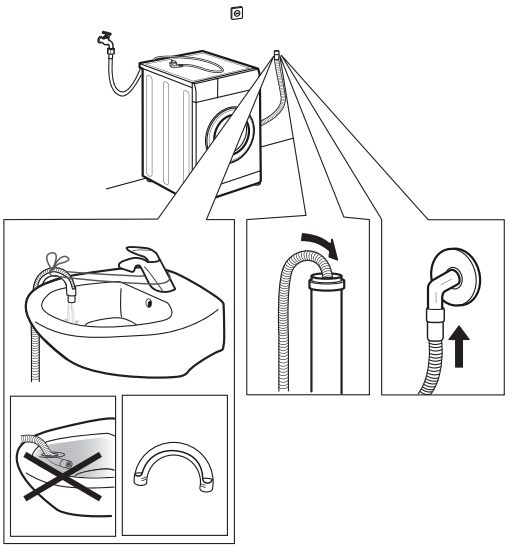

12.

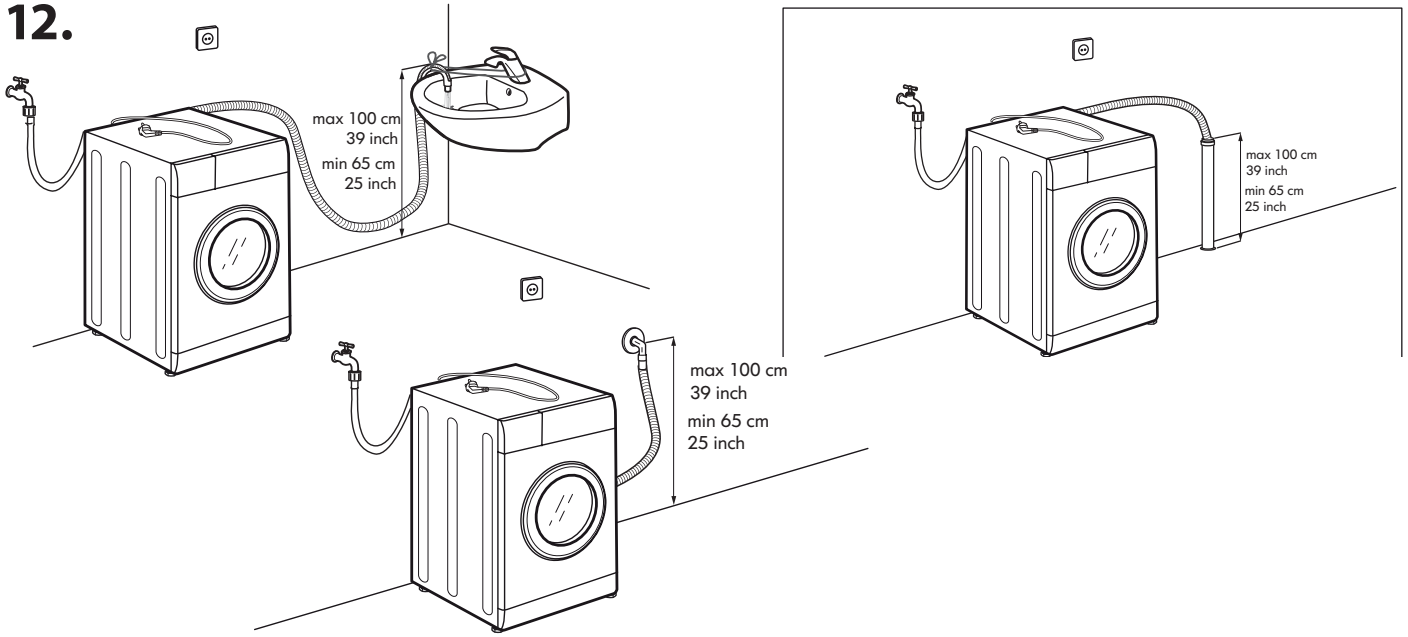

13.

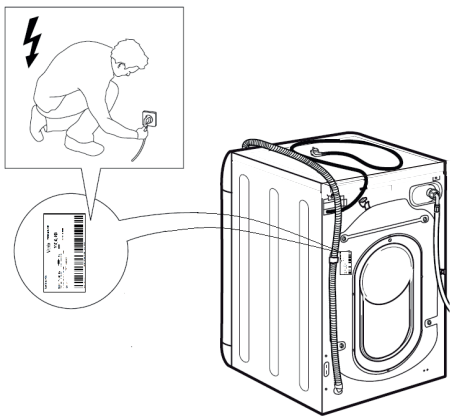

14.

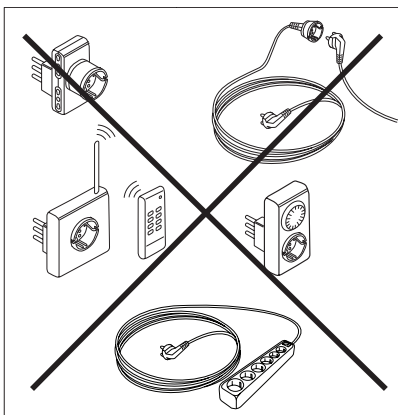

SAFETY INSTRUCTIONS

IMPORTANT TO BE READ AND OBSERVE

Before using the appliance, read these safety instructions. Keep them nearby for future reference. These instructions and the appliance itself provide important safety warnings, to be observed at all times. The manufacturer declines any liability for failure to observe these safety instructions, for inappropriate use of the appliance or incorrect setting of controls.

⚠ Very young children (0-3 years) should be kept away from the appliance. Young children (3-8 years) should be kept away from the appliance unless continuously supervised. Children from 8 years old and above and persons with reduced physical, sensory or mental capabilities or lack of experience and knowledge can use this appliance only if they are supervised or have been given instructions on safe use and understand the hazards involved. Children must not play with the appliance. Cleaning and user maintenance must not be carried out by children without supervision. Never open the door forcibly or use it as a step.

PERMITTED USE

⚠ **CAUTION:** The appliance is not intended to be operated by means of an external switching device, such as a timer, or separate remote controlled system.

⚠ This appliance is intended to be used in household and similar applications such as: staff kitchen areas in shops, offices and other working environments; farm houses; by clients in hotels, motels, bed & breakfast and other residential environments.

⚠ Do not load the machine above the maximum capacity (kg of dry cloth) indicated in the programme table.

⚠ This appliance is not for professional use. Do not use the appliance outdoors.

⚠ Do not use any solvents (e.g. turpentine, benzene), detergents containing solvents, scouring powder, glass or general purpose cleaners, or flammable fluids; do not machine wash fabrics that have been treated with solvents or flammable liquids.

INSTALLATION

⚠ The appliance must be handled and installed by two or more persons - risk of injury. Use protective gloves to unpack and install - risk of cuts.

If you want to stack a dryer on top of your washing machine, first contact our After-Sales Service or your specialist dealer to verify whether this is possible. This is only possible if the dryer is attached to the washing machine by means of appropriate stacking kit available through our After- Sales Service or your specialist dealer.

⚠ Move the appliance without lifting it by the worktop or top lid.

⚠ Installation, including water supply (if any) and electrical connections and repairs must be carried out by a qualified technician. Do not repair or replace any part of the appliance unless specifically stated in the user manual. Keep children away from the installation site. After unpacking the appliance, make sure that it has not been damaged during transport. In the event of problems, contact the dealer or your nearest After-sales Service. Once installed, packaging waste (plastic, styrofoam parts etc.) must be stored out of reach of children - risk of suffocation. The appliance must be disconnected from the power supply before any installation operation - risk of electric shock. During installation, make sure the appliance does not damage the power cable - risk of fire or electric shock. Only activate the appliance when the installation has been completed.

⚠ Do not install your appliance where it may be exposed to extreme conditions, such as: poor ventilation, temperatures below 5 °C or above 35 °C.

⚠ When installing the appliance make sure that the four feet are stable and resting on the floor, adjusting them as required, and check that the appliance is perfectly to level using a spirit level.

⚠ If the appliance is being installed on wood or “floating” floors (certain parquet and laminate materials), secure a 60 x 60 x 3 cm (at least) sheet of plywood to the floor then place the appliance on top of this.

⚠ Connect the water inlet hose(s) to the water supply in accordance with the regulations of your local water company.

⚠ For cold fill only models: do not connect to the hot water supply.

⚠ For models with hot fill: the hot water inlet temperature must not exceed 60 °C.

⚠ The washing machine is fitted with transport bolts to prevent any possible damage to the interior during transport. Before using the machine, it is imperative that the transport bolts are removed. After their removal, cover the openings with the 4 enclosed plastic caps.

⚠ After installation of the device, wait a few hours before starting it so that it acclimates to the environmental conditions of the room.

⚠ Make sure that the ventilation openings in the base of your washing machine (if available on your model) are not obstructed by a carpet or other material.

⚠ Use only new hoses to connect the appliance to the water supply. The old hose-sets should not be reused.

⚠ The supply water pressure must be in the 0.1-1 Mpa range.

ELECTRICAL WARNINGS

⚠ It must be possible to disconnect the appliance from the power supply by unplugging it if plug is accessible, or by a multi-pole switch installed upstream of the socket in accordance with the wiring rules and the appliance must be earthed in conformity with national electrical safety standards.

⚠ Do not use extension leads, multiple sockets or adapters. The electrical components must not be accessible to the user after installation. Do not use the appliance when you are wet or barefoot. Do not operate this appliance if it has a damaged power cable or plug, if it is not working properly, or if it has been damaged or dropped.

⚠ If the supply cord is damaged, it must be replaced with an identical one by the manufacturer, its service agent or similarly qualified persons in order to avoid a hazard - risk of electric shock.

CLEANING AND MAINTENANCE

⚠ WARNING: Ensure that the appliance is switched off and disconnected from the power supply before performing any maintenance operation; never use steam cleaning equipment - risk of electric shock.

DISPOSAL OF PACKAGING MATERIALS

The packaging material is 100% recyclable and is marked with the recycle symbol ♻.

The various parts of the packaging must therefore be disposed of responsibly and in full compliance with local authority regulations governing waste disposal.

DISPOSAL OF HOUSEHOLD APPLIANCES

This appliance is manufactured with recyclable or reusable materials. Dispose of it in accordance with local waste disposal regulations. For further information on the treatment, recovery and recycling of household electrical appliances, contact your local authority, the collection service for household waste or the store where you purchased the appliance. This appliance is marked in compliance with European Directive 2012/19/EU, Waste Electrical and Electronic Equipment (WEEE). By ensuring this product is disposed of correctly, you will help prevent negative consequences for the environment and human health.

The symbol  on the product or on the accompanying documentation indicates that it should not be treated as domestic waste but must be taken to an appropriate collection center for the recycling of electrical and electronic equipment.



INSTRUCTIONS FOR THE FITTER

Mounting the wooden panel onto the door and inserting the machine into cabinets:
In the case where the machine must be shipped for final installation after the wooden panel has been mounted, we suggest leaving it in its original packaging. The packaging was designed to make it possible to mount the wooden panel onto the machine without removing it completely *(see figures below)*.
The wooden panel that covers the face of the machine must not be less than **13 mm** in thickness and can be hinged on either the right or left. For the sake of practicality when using the machine, we recommend that the panel be hinged on the same side as the door for the machine itself - the left.

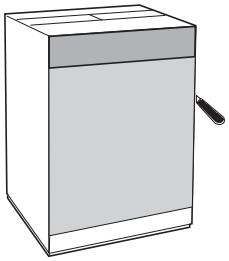

A

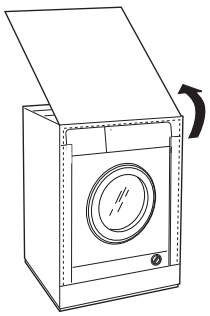

B

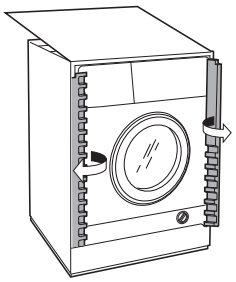

C

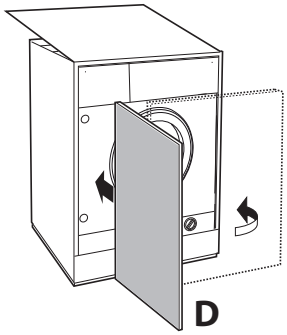

D

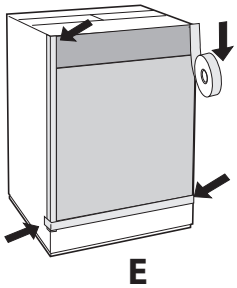

E

Door Mounting Accessories (Fig. 1-2-3-4-5).

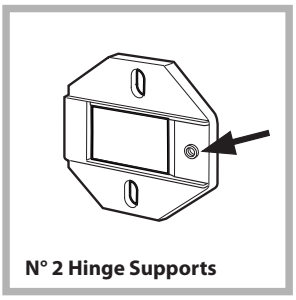

Fig. 1

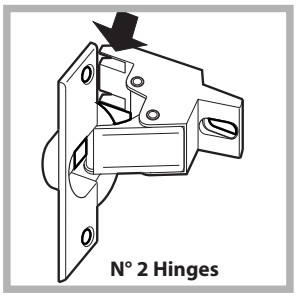

Fig. 2

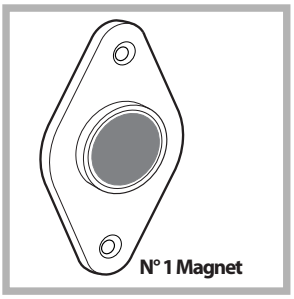

Fig. 3

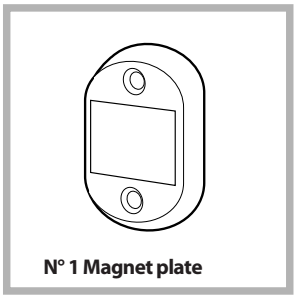

Fig. 4

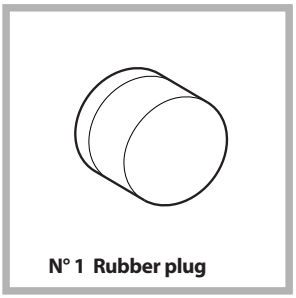

Fig. 5

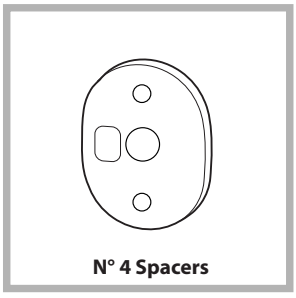

Fig. 4/B

- No. 6 type **A** self-threading screws, l =13 mm.
- No. 2 type **B** metric, countersunk screws, l =25; for fastening the magnet plate to the cabinet.
- No. 4 type **C** metric screws, l =15 mm; for mounting the hinge supports to the cabinet.
- No. 4 type **D** metric screws, l =7 mm; for mounting the hinges on the supports.

Mounting the Parts onto the Face of the Machine.
- Fit the hinge supports to the appliance front panel, positioning the hole marked with an arrow in *fig. 1* so that it is on the inner side of the front panel. Fit a spacer (*fig. 4/B)* between the surfaces using type **C** screws.
- Fit the magnet plate at the top of the opposite side, using type **B** screws to fix two spacers *(fig. 4/B)* between the plate and the surface.

Using the Drilling Template.
- To trace the positions of the holes on the left-hand side of the panel, align the drilling template to the top left side of the panel using the lines traced on the extremities as a reference.
- To trace the positions of the holes on the right-hand side of the panel, align the drilling template to the top right side of the panel.
- Use an appropriately sized router to mill the holes for the two hinges, the rubber plug and the magnet.

Mounding the Parts onto the Wooden Panel (Door).
- Insert the hinges into the holes (the movable part of the hinge must be positioned facing away from the panel) and fasten them with the 4 type **A** screws.
- Insert the magnet into the top hole on the opposite side of the hinges and fasten it with the two type **B** screws.
- Insert the rubber plug into the bottom hole.
The panel is now ready to be mounted onto the machine.

Mounting the Panel into the machine.
Insert the nib of the hinge (indicated by the arrow in *fig. 2*) into the hole for the hinge and push the panel towards the front of the machine. Fasten the two hinges with the type **D** screws.

Fastening the plinth guide.
If the machine is installed at the end of a set of modular cabinets, mount either one or both of the guides for the base molding (as shown in *fig. 8*). Adjust them for depth based on the position of the base molding, and, if necessary, fasten the base to the guides *(fig. 9)*.
This is how to assemble the plinth guide *(fig. 8)*: Fasten angle **P** using screw **R**, insert plinth guide **Q** into the special slot and once it is in the desired position, lock it in place using angle **P** and screw **R**.

Inserting the machine into the Cabinet.
- Push the machine into the opening, aligning it with the cabinets *(fig. 6)*.
- Regulate the adjustable feet to raise the machine to the appropriate height.
- To adjust the position of the wooden panel in both the vertical and horizontal directions, use the **C** and **D** screws, as shown in *fig. 7*.
Important: *close the lower part of the appliance front by ensuring that the plinth rests against the floor.*

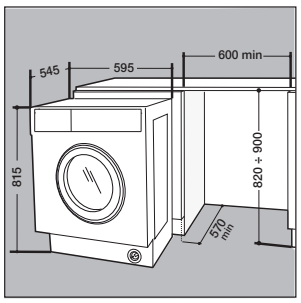

Fig. 6

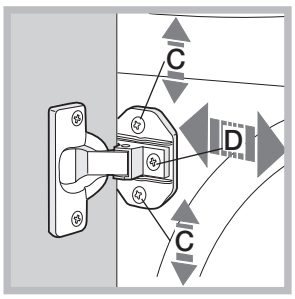

Fig. 7

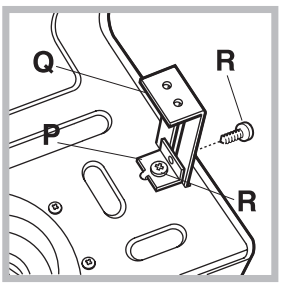

Fig. 8

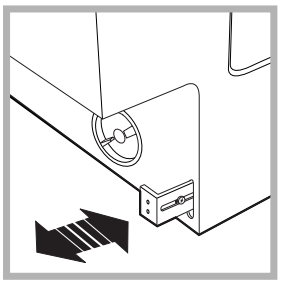
Fig. 9

Accessories provided for the height adjustment.

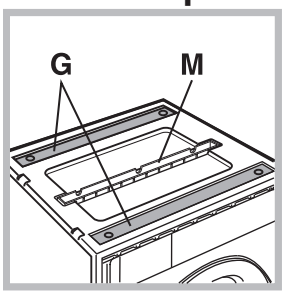

Fig. 10

The following can be found inside the polystyrene lid *(fig. 10)*: 2 crossbars (**G**), 1 strip (**M**)
the following can be found inside the appliance drum:
4 additional feet (**H**),
4 screws (**I**),
4 screws (**R**),
4 nuts (**L**),
2 plinth guides (**Q**)

Adjusting the appliance height.
The height of the appliance can be adjusted (from **815** mm to **835** mm), by turning the **4** feet.
Should you require the appliance to be placed higher than the above height, you need to use the following accessories to raise it to up to **870** mm:
the two crossbars (**G**); the 4 feet (**H**); the 4 screws (**I**); the 4 nuts (**L**) then perform the following operations *(fig. 11)*:
remove the **4** original feet, place a crossbar **G** at the front of the appliance, fastening it in place using screws **I** (screwing them in where the original feet were) then insert the new feet **H**.
Repeat the same operation at the back of the appliance.
Now adjust feet **H** to raise or lower the appliance from **835** mm to **870** mm.
Once you have reached the desired height, lock nuts **L** onto crossbar **G**.
To adjust the appliance to a height between **870** mm and **900** mm, you need to mount strip **M**, adjusting feet **H** to the required height.
Insert the strip as follows:
loosen the three screws **N** situated at the front of the Top cover of the appliance, insert strip **M** as shown in *fig. 12*, then fasten screws **N**.

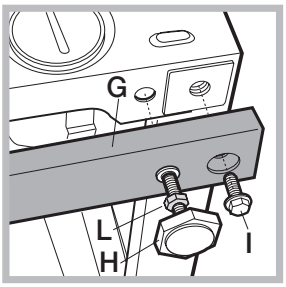

Fig. 11

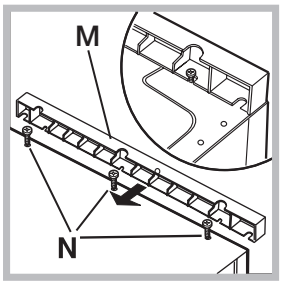

Fig. 12