

A
x4
3,9 x 9,5mm



B
x8
3,5 x 13mm



x2

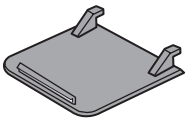

x2

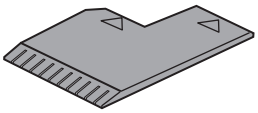

x1



Y
x2
(✳ ✳✳✳)



Z
x4

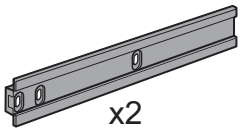

x2

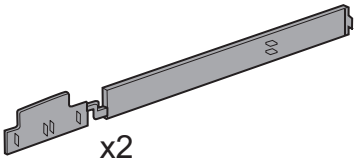

x2

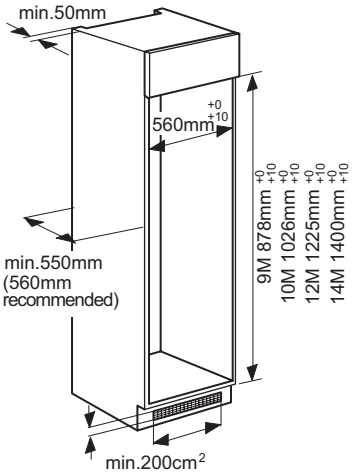

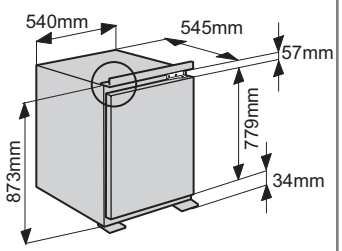

9M

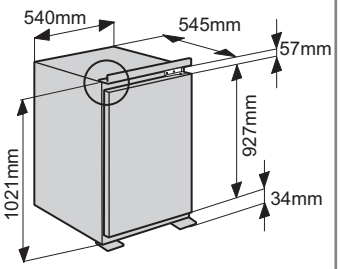

10M

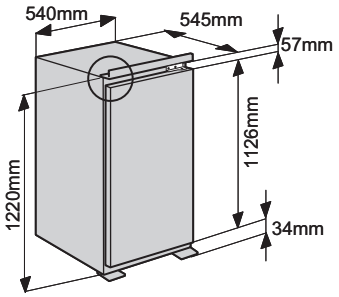

12M

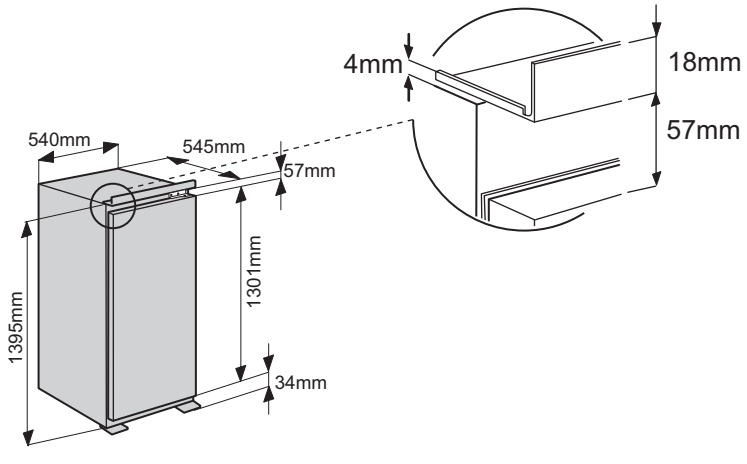

14M

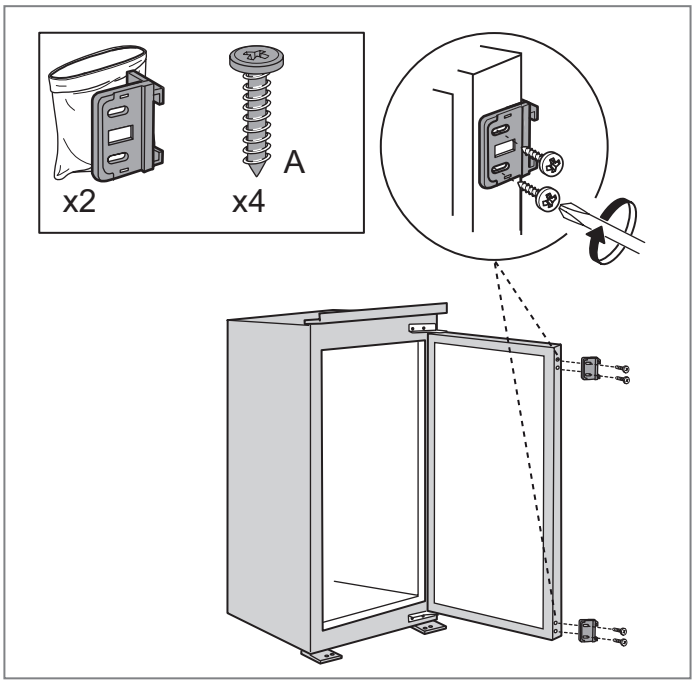
x2
A
x4

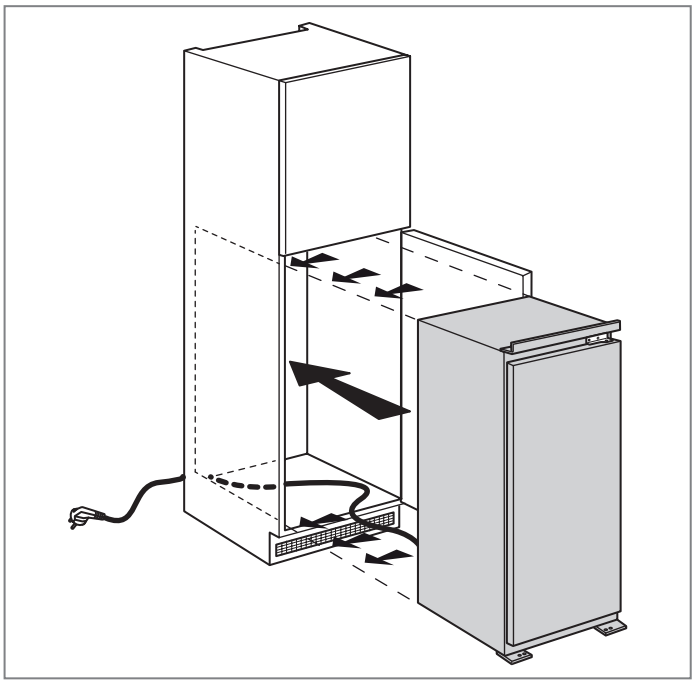

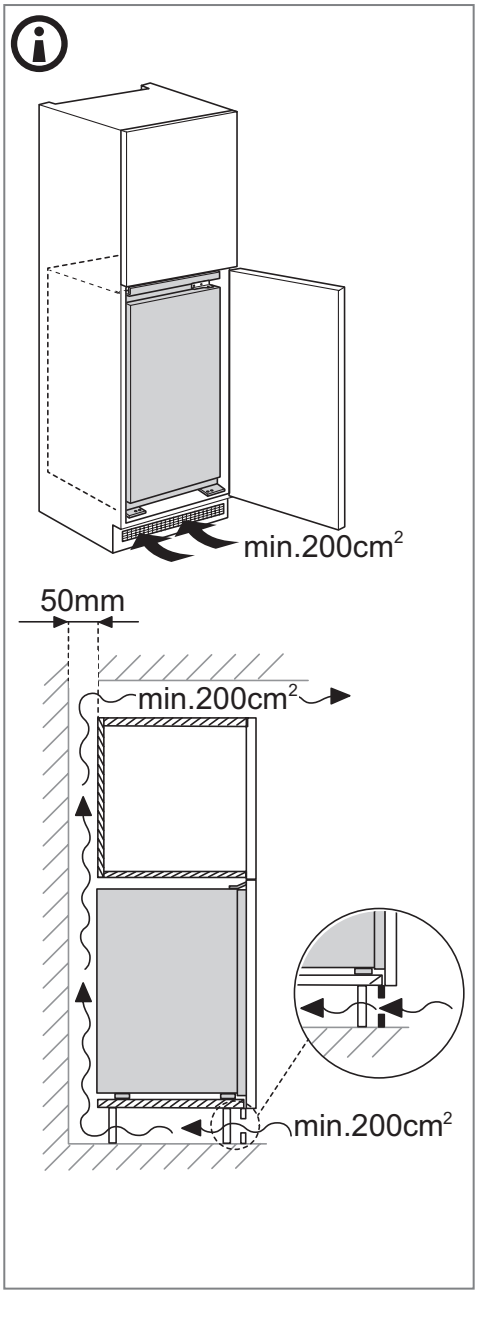
min.200cm²
50mm
min.200cm²
min.200cm²

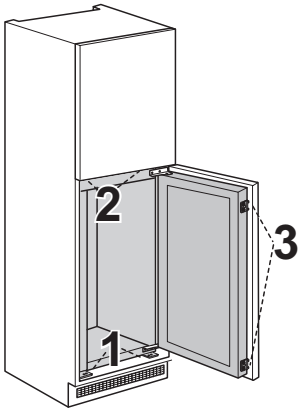
2
3
1

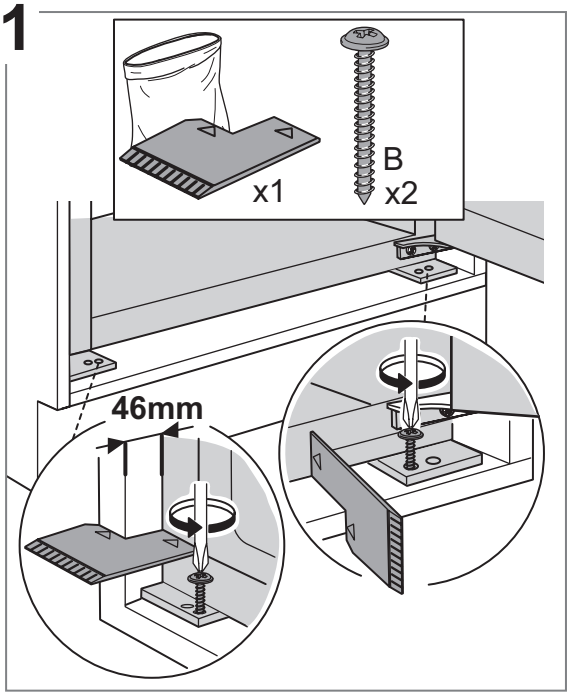
1
x1
B
x2
46mm

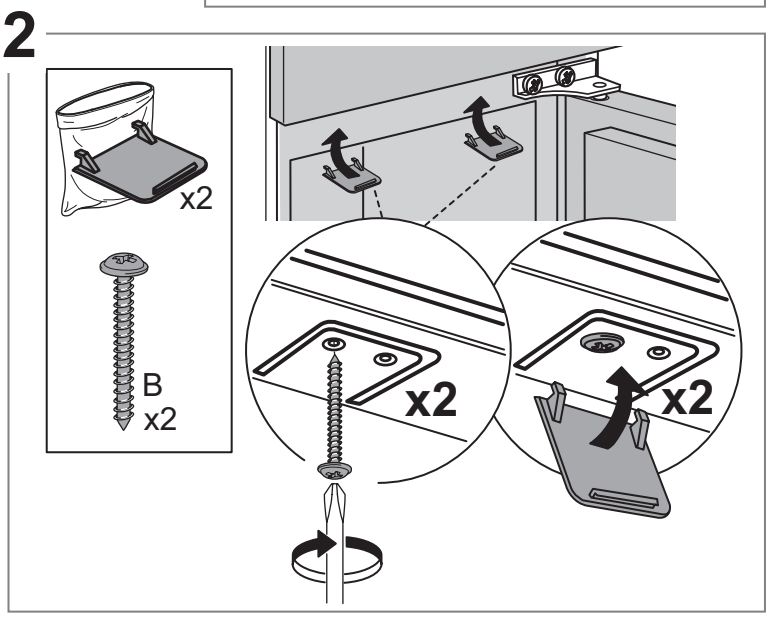
2
x2
B
x2
x2
x2

3

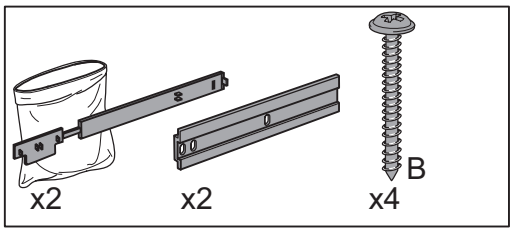

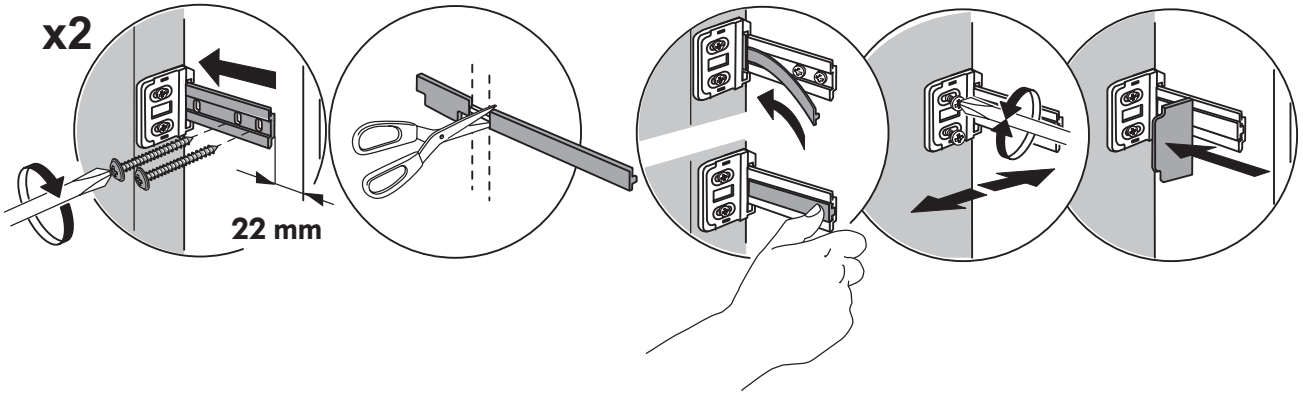

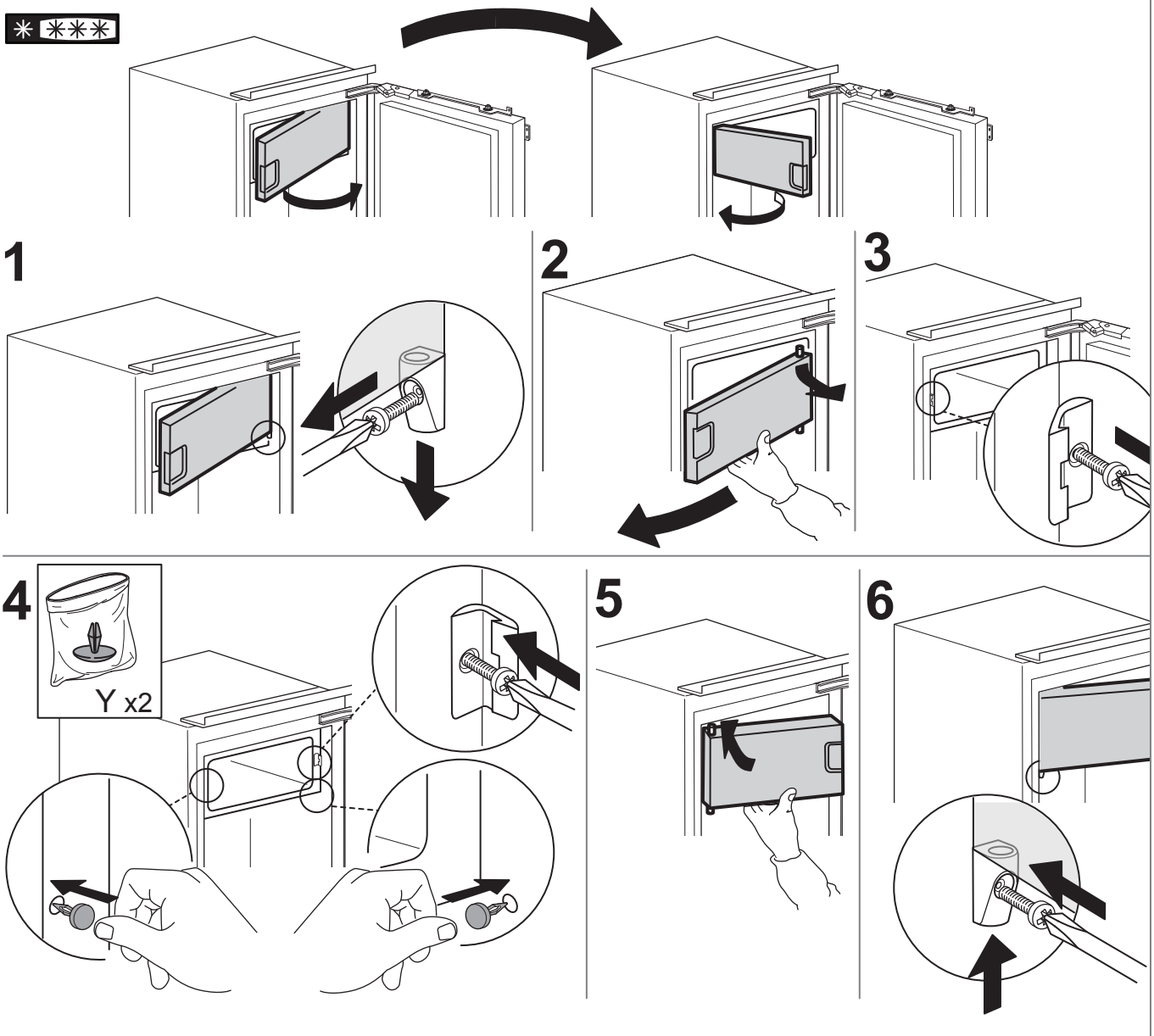

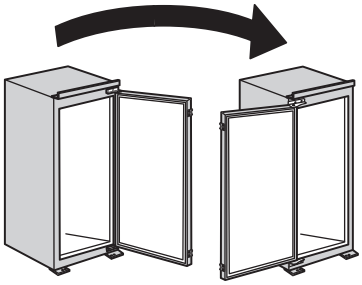

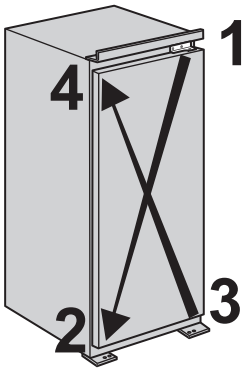

1

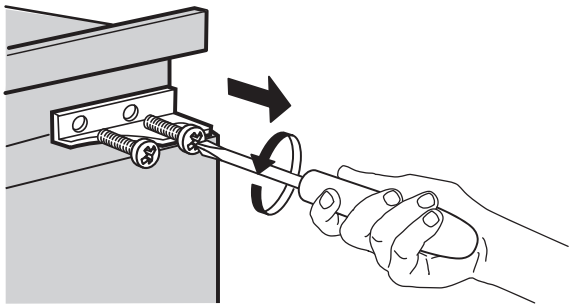

2

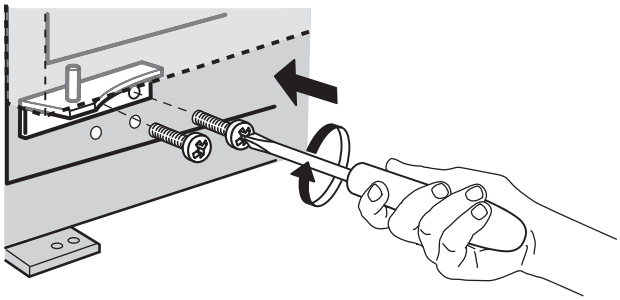

3

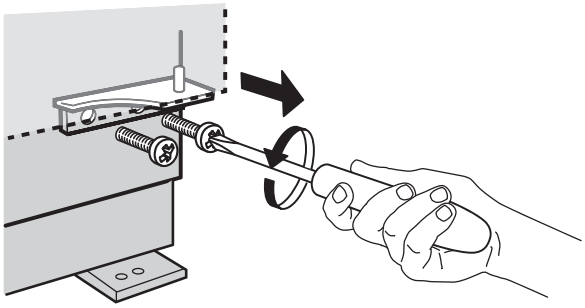

4

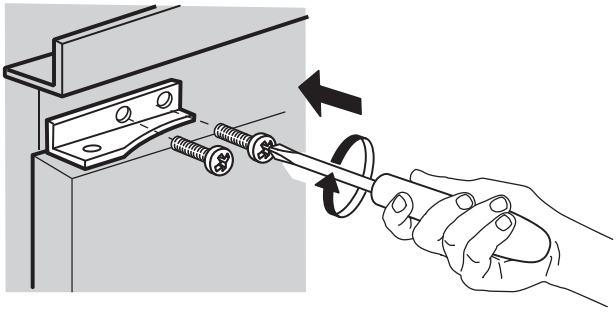

5

