Operating and installation instructions

fridge/freezer with BioFresh

EN

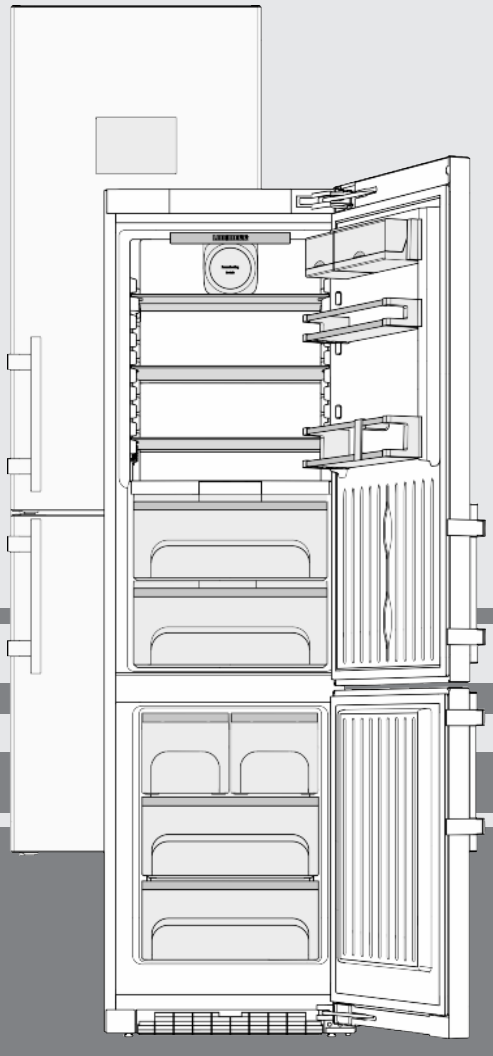

20200629 **7088201 - 00**

CBNes

LIEBHERR

Contents

1	**Appliance at a glance**	**2**
1.1	Overview of the appliance and its equipment	2
1.2	Appliance range of use	3
1.3	Conformity	3
1.4	Product data	3
1.5	EPREL database	3
1.6	Installation dimensions	3
1.7	Saving energy	3
1.8	Example of contents arrangement	4
1.9	Smart device	4
2	**General safety information**	**4**
3	**Controls and displays**	**5**
3.1	Status screen	5
3.2	Home screen	6
3.3	Navigation	6
3.4	Display symbols	7
3.5	Appliance options	7
4	**Putting into operation**	**7**
4.1	Transporting the appliance	7
4.2	Installing the appliance	8
4.3	Reversing the door	9
4.4	Water connection	18
4.5	Insertion into a row of kitchen units	19
4.6	Disposing of packaging	19
4.7	Connecting the appliance	19
4.8	Switching on the appliance	20
4.9	SmartDevice box	20
4.10	Inserting the FreshAir filter.	22
4.11	Activating the clean ventilation grill reminder function	22
5	**Control**	**23**
5.1	System settings	23
5.2	Timer	23
5.3	Programme	24
5.4	Options	25
5.5	Refrigerator compartment	27
5.6	BioFresh compartment	29
5.7	Freezer compartment	31
6	**Maintenance**	**34**
6.1	Change the FreshAir filter	34
6.2	Defrosting with NoFrost	34
6.3	Cleaning the ventilation grid	34
6.4	Cleaning the appliance	34
6.5	Cleaning the IceMaker	35
6.6	Customer service	35
7	**Malfunctions**	**36**
8	**Messages**	**37**
9	**Decommissioning**	**38**
9.1	Switching the appliance off	38
9.2	Taking the appliance out of service	38
10	**Disposing of the appliance**	**38**

The manufacturer works constantly on the further development of all the types and models. Therefore please understand that we have to reserve the right to make design, equipment and technical modifications.

To get to know all the benefits of your new appliance, please read the information contained in these instructions carefully.

The instructions apply to several models. Differences may occur. Text relating only to specific appliances is marked with an asterisk (*).

Instructions for action are marked with a ▶, the results of action are marked with a ▷.

1 Appliance at a glance

1.1 Overview of the appliance and its equipment

Exemplary illustration of the appliance model

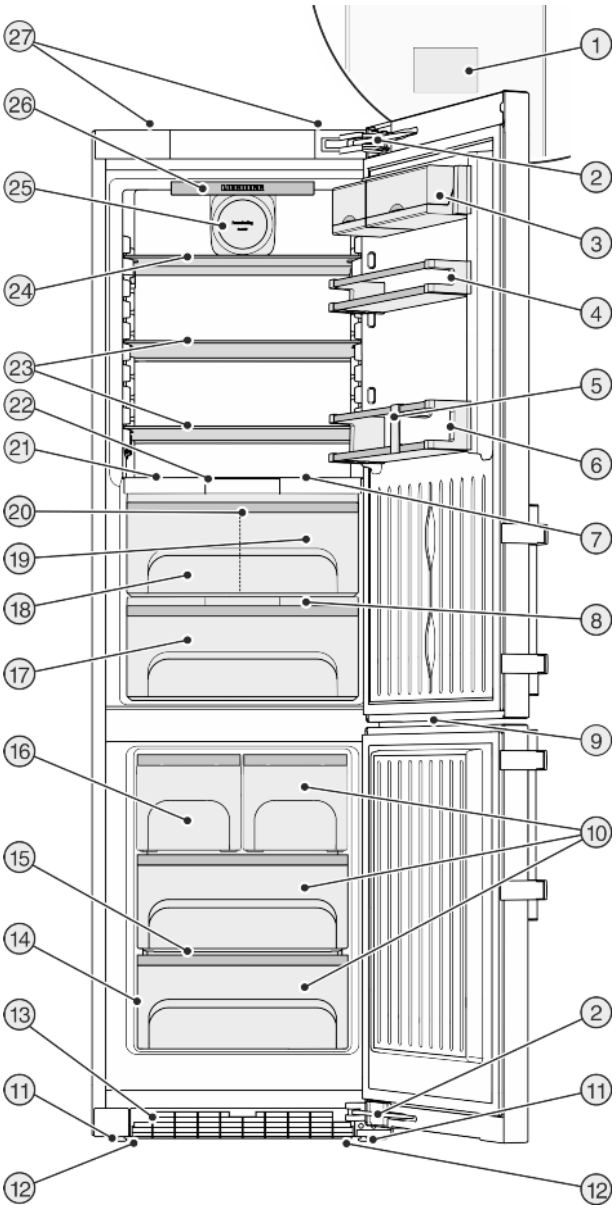

Fig. 1

(1) Operating and control elements
(2) Closing damper
(3) Box shelf
(4) Can rack
(5) Bottle rack
(6) Bottle shelf
(7) LED interior lighting
(8) Fruit & Vegetable safe cover
(9) Freezer compartment LED light
(10) Freezer compartment
(11) Adjustable feet
(15) VarioSpace
(16) IceMaker
(17) Fruit & vegetable safe, adjustable
(18) BioFresh-plus compartment
(19) Fish & Seafood compartment
(20) BioFresh compartment LED lighting
(21) Adjustable bottle shelf
(22) BioFresh-plus display
(23) Shelf
(24) Shelf, can be split
(25) Fan, with holder for fresh air filter

(12) Front transport handles, rear transport castors
(13) Ventilation grid
(14) Rating plate
(26) Interior LED light, can be rotated
(27) Rear transport handles

Note
▶ Shelves, drawers and baskets are arranged for optimum energy efficiency on delivery.

1.2 Appliance range of use

Intended use

The appliance is only suitable for cooling food products in a domestic or household-like environment. This includes, for example, use:

- in staff kitchens, bed and breakfast establishments,
- by guests in country houses, hotels, motels and other accommodation,
- for catering and similar services in the wholesale trade.

The appliance is not suitable as a built-in unit.

All other types of use are not permitted.

Foreseeable misuse

The following applications are expressly forbidden:

- Storing and refrigerating medicines, blood plasma, laboratory preparations or similar substances and products based on the Medical Device Directive 2007/47/EC
- Use in areas at risk of explosions
- Use on moving substrates, such as ships, rail travel or aeroplanes
- Storing live animals

Misusing the appliance may lead to damage to the goods stored or they may spoil.

Climate classifications

Depending on the climate classification the appliance is designed to operate in restricted ambient temperatures. The climate classification applying to your appliance is printed on the rating plate.

Note
▶ Keep to the specified ambient temperatures in order to guarantee that the appliance works properly.

Climate classification	for ambient temperatures of
SN	10 °C to 32 °C
N	16 °C to 32 °C
ST	16 °C to 38 °C
T	16 °C to 43 °C

1.3 Conformity

The refrigerant circuit has been tested for leaks. This appliance complies with the applicable safety stipulations and with directives 2014/35/EU, 2014/30/EU, 2009/125/EG, 2011/65/EU and 2010/30/EU.

The BioFresh compartment meets the requirements of a cold storage compartment as set out in DIN EN 62552:2020.

1.4 Product data

Product data is included with the appliance, as per Directive (EU) 2017/1369. The complete product data sheet is available on the Liebherr website under Downloads.

1.5 EPREL database

Details about energy labelling and ecodesign requirements will be available on the European product database (EPREL) from 1st March 2021. You can access the product database at the following link: https://eprel.ec.europa. eu/ You will be asked to enter the model ID. You can find the model ID on the nameplate.

EN

1.6 Installation dimensions

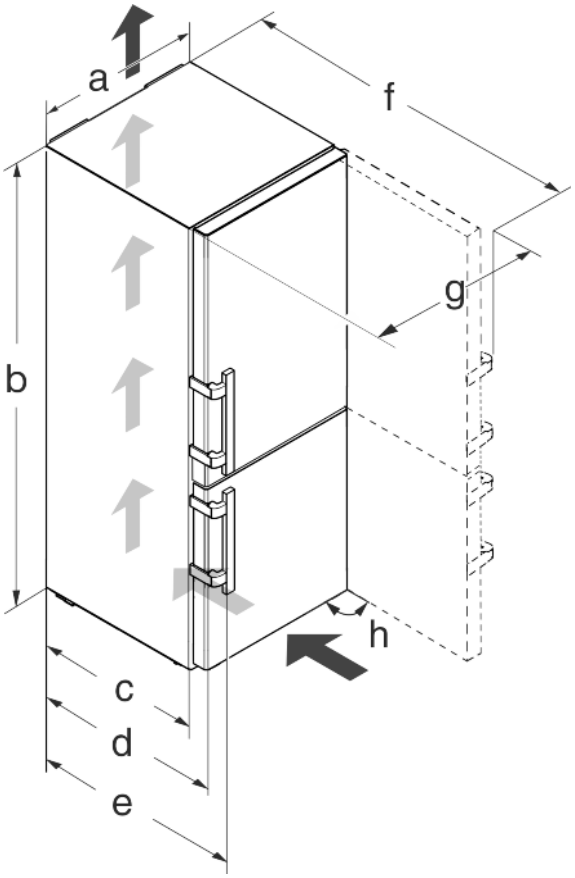

Fig. 2

Model	a [mm]	b [mm]	c [mm]	d [mm]	e [mm]	f [mm]	g [mm]	h [°]
CBNes 48..	600	2010	600 x	665 x	709 x	1223 x	640	90

x When using wall spacers, the dimensions increase by 15 mm (see 4.2 Installing the appliance) .

1.7 Saving energy

- Pay attention to good ventilation. Do not cover ventilation holes or grids.

- Always keep the fan air slits clear.
- Do not install the appliance in direct sunlight, next to an oven, radiator or similar.
- Energy consumption is dependent on the installation conditions, e.g. ambient temperature (see 1.2 Appliance range of use) . If the ambient temperature deviates from the standard temperature of 25°C, the energy consumption may differ.
- Open the appliance for as short a time as possible.
- The lower the temperature is set the higher the energy consumption.
- Arrange the food in an organised way (see 1 Appliance at a glance) .
- Keep all food properly packed and covered. This prevents frost from forming.
- Only take food out for as long as necessary so that it doesn't warm up too much.
- Inserting warm food: allow to cool down to room temperature first.
- Thaw frozen food in the refrigerator.
- Use the holiday function if you intend to be away for an extended period .
- Leave the default setting of the screen switch-off function. This switches the screen off after 24 hours, (see 5.1.5 Set screen brightness) .

1.8 Example of contents arrangement

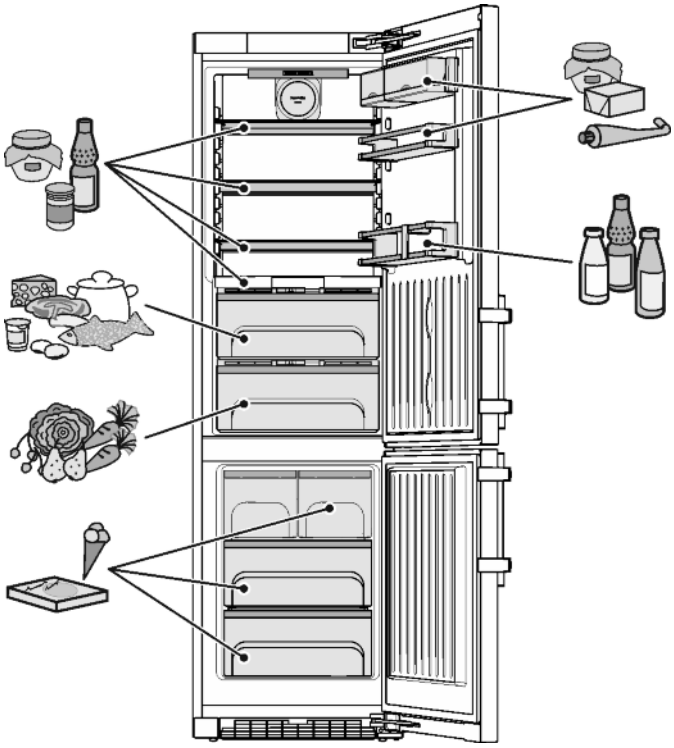

Fig. 3

1.9 Smart device

The appliance is ready for integration into a smart home and for extended services. With a SmartDevice Box, you can activate this and other options. This is activated via the MyLiebherr customer portal.



Note
The SmartDevice Box is available for purchase from the Liebherr Household Store (home.liebherr.com).

You will find more information about availability and prerequisites and the individual options on the website, www.smartdevice.liebherr.com.

2 General safety information

Danger for the user:

- This device can be used by children and people with impaired physical, sensory or mental abilities or with a lack of experience and knowledge provided that they are supervised or have received instruction in the safe use of this device, and about the resulting hazards. Children must not play with this appliance. Cleaning and user maintenance work must not be carried out by children without adult supervision. Children aged between 3 and 8 are allowed to load and unload the appliance. Children below the age of 3 must be kept away from the appliance unless they are under continuous adult supervision.
- When disconnecting the appliance from the supply, always take hold of the plug. Do not pull the cable.
- In the event of a fault pull out the mains plug or deactivate the fuse.
- Do not damage the mains power cable. Do not operate the appliance with a defective mains power cable.
- Only customer service or other specially trained staff may repair or perform other operations on the appliance.
- Only assemble, connect and dispose of the appliance according to the instructions.
- Please keep these instructions in a safe place and pass them on to any subsequent owners.
- The manufacturer is not liable for damage caused by a faulty fixed water connection.

Fire hazard:

- The coolant used (information on the model plate) is eco-friendly but also flammable. Any leaking coolant may ignite.
  - Do not damage the refrigerant circuit pipes.
  - Do not handle ignition sources inside the appliance.
  - Do not use electrical appliances inside the appliance (e.g. steam cleaners, heaters, ice cream makers, etc.).
  - If the refrigerant leaks: remove any naked flames or ignition sources from the vicinity of the leakage point. Properly air the room. Inform customer services.
- Do not store explosives or sprays using combustible propellants such as butane, propane, pentane, etc. in the appliance. To

identify these spray cans, look for the list of contents printed on the can, or a flame symbol. Gases possibly escaping may ignite due to electrical components.
- Keep burning candles, lamps and other items with naked flames away from the appliance so that they do not set the appliance on fire.
- Please be sure to store alcoholic drinks or other packaging containing alcohol in tightly closed containers. Any alcohol that leaks out may be ignited by electrical components.

Danger of tipping and falling:

- Do not misuse the plinth, drawers, doors etc. as a step or for support. This applies particularly to children.
- Danger of tipping if the door is open if the appliance has not yet been installed properly.

Danger of food poisoning:

- Do not consume food which has been stored too long.

Danger of frostbite, numbness and pain:

- Avoid prolonged skin contact with cold surfaces or refrigerated/frozen goods or take protective measures, e.g wear use gloves.

Danger of injury and damage:

- Hot steam can lead to injury. Do not use electrical heating or steam cleaning equipment, open flames or defrosting sprays to defrost.
- Do not use sharp implements to remove the ice.

Danger of crushing:

- Do not hold the hinge when opening and closing the door. Fingers may get caught.

Symbols on the appliance:



The symbol can be located on the compressor. It refers to the oil in the compressor and indicates the following danger: Swallowing or inhaling can be fatal. This is only relevant for recycling. There is no danger in normal operation.



This symbol is found on the compressor and indicates the danger of flammable materials. Do not remove the sticker.



A sticker to this effect may be applied to the rear of the appliance. It refers to the foam-padded panels in the door and/or the housing. This is only relevant for recycling. Do not remove the sticker.

Please observe the specific information in the other sections:

	DANGER	identifies a situation involving direct danger which, if not obviated, may result in death or severe bodily injury.
	WARNING	identifies a dangerous situation which, if not obviated, may result in death or severe bodily injury.
	CAUTION	identifies a dangerous situation which, if not obviated, may result in minor or medium bodily injury.
	NOTICE	identifies a dangerous situation which, if not obviated, may result in damage to property.
	Note	It contains useful instructions and tips.

EN

3 Controls and displays

3.1 Status screen

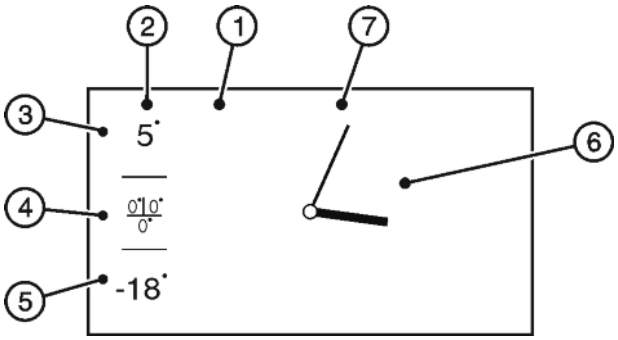

Fig. 4

(1) Screen
(2) Temperature display
(3) Fridge compartment temperature display
(4) BioFresh Plus compartment temperature display
(5) Freezer compartment temperature display
(6) Time
(7) Date display, if selected

The status screen is displayed in normal operation if no settings are made. The set temperatures, time and date, if selected, are displayed.

Pressing on the temperature display takes you to the Home screen and setting options.

Pressing on the time activates a timer.

3.2 Home screen

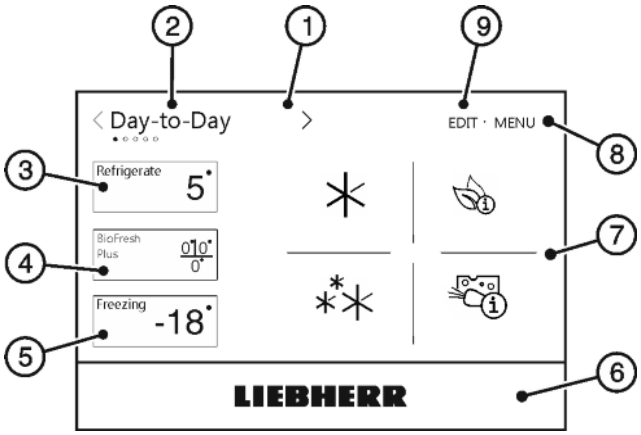

Fig. 5

(1) Screen
(2) Programme selection
(3) Fridge compartment field
(4) BioFresh Plus field
(5) Freezer compartment field
(6) Liebherr button
(7) Programme field
(8) Menu
(9) Edit

The Home screen provides access to setting options and programme selection.

All functions can be called up by touching the screen and values can be changed.

Programme selection

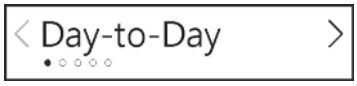

Fig. 6 Programme name

The currently set programme is displayed in the programme selection.

5 different programmes can be selected. Each programme offers individual temperature and function settings for different requirements.

Fridge compartment field



Fig. 7 Fridge compartment temperature display

The fridge compartment temperature is displayed in the fridge compartment field.

The new target value is immediately displayed when the temperature is changed. Arrows show the temperature change.

The following settings can be entered:

- Temperature settings
- Switching the fridge compartment on and off

The BioFresh Plus compartment is also switched off when the refrigerator compartment is switched off.

BioFresh Plus field

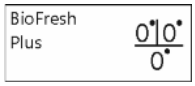

Fig. 8 BioFresh Plus temperature display

The BioFresh Plus temperature is displayed in the BioFresh Plus field.

The new target value is immediately displayed when the temperature is changed.

The following settings can be entered:

- Temperature settings
- Switching the fridge compartment and BioFresh Plus section on and off

Freezer compartment field



Fig. 9 Freezer compartment temperature display

The freezer compartment temperature is displayed in the freezer compartment field.

The new target value is immediately displayed when the temperature is changed. Arrows show the temperature change.

The following settings can be entered:

- Temperature settings
- Turning the appliance on and off. The screen remains on.

Temperature field

The temperature field includes the refrigerator compartment, the BioFresh Plus and freezer compartment field.

Liebherr button

The entire surface under the screen is a button. Pressing on the button takes you to the status screen.

Programme field

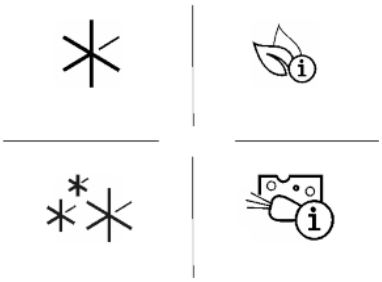

Fig. 10 Programme-specific options

Programme-specific options are displayed in the programme field. These offer setting options for the fridge and freezer area.

A maximum of 6 options can be displayed in the programme field.

Menu

Basic settings and programme-independent settings can be made via the menu.

Edit

Programme-specific options for display on the Home screen can be selected or deselected using the Edit command.

3.3 Navigation

The appliance is predominantly operated using the following symbols:

	Standby: Switch appliance or temperature zone on and off.
MENU	**Menu:** Access to individual options and settings.
EDIT	**Edit:** Selecting and deselecting programme-specific options.
LIEBHERR	**Liebherr button:** Cancel selection, status screen appears.

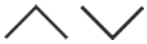

Up/down navigation arrow:

Date and time setting.

The first option is displayed again after the last setting option.



Left/right navigation arrow:

Select choice and navigate.

If other settings can be selected, these can be selected via the navigation arrows. After the last or first setting option has been displayed, the navigation arrows are greyed out.



Back:

Cancel selection or leave setting.

The display switches to the next higher level or to the home screen



Home:

Cancel selection or leave setting.

The display switches to the home screen.



Status button On/Off



: Option activated, function active.



: Option deactivated, function deactivated.



Selection indicator


: Setting/selection active.


: Setting/selection deactivated.



Messages:

There are active error messages and reminders.

Message data can be displayed again.

x **Cancel:**

Cancels the selection.

After confirming a function or option, an audible signal is emitted if alert and reminder sounds are activated.

Note

If no selection is made after 1 minute the display switches to the home screen.

3.4 Display symbols

Display symbols provide information on the current appliance status:



Up arrows:

The temperature increases.

During temperature changes and after completing options, upward arrows display the temperature increase until the target temperature is reached.



Down arrows:

The temperature reduces.

During temperature changes and after switching on options, downward arrows display the temperature decrease until the target temperature is reached.



Standby:

The appliance or temperature zone is switched off.

active **Activated option:**

Displayed options are labelled *active* on the Home screen if these are switched on.

1 *of* ... / ● ○ ○ ○ **Navigation bar:**

The navigation bar shows the current position within a selection.

3.5 Appliance options

You can select or set the following options; explanations and setting options, (see 5 Control) :

Symbol	Option
	*Child safety device*
	*SuperCool*
	*SuperFrost*
	*IceMaker*
	*SabbathMode*
	*Party timer*
	*Bottle timer*
	*Night mode*
	Storage recommendations
	Energy saving tips
	Display settings

4 Putting into operation

4.1 Transporting the appliance

▶ Transport the appliance only in suitable packaging.
▶ Transport the appliance upright.

EN

▶ Do not transport the appliance on your own.

4.2 Installing the appliance

WARNING
Fire hazard due to dampness!
If live parts or the mains lead become damp this may cause short circuits.
▶ The appliance is designed for use in enclosed areas. Do not operate the appliance outdoors or in areas where it is exposed to splash water or damp conditions.

WARNING
Risk of fire due to short circuit!
If the mains cable/connector of the appliance or of another appliance touch the rear of the appliance, the mains cable/connector may be damaged by the appliance vibrations, leading to a short circuit.
▶ Stand the appliance so that it is not touched by connectors or main cables.
▶ Do not plug the appliance or any others into sockets located near the rear of the appliance.

WARNING
Fire hazard due to refrigerant!
The coolant used is eco-friendly but also flammable. Any leaking coolant may ignite.
▶ Do not damage the piping of the refrigeration circuit.

WARNING
Fire hazard and danger of damage!
▶ Do not place appliances emitting heat e.g. microwaves, toasters etc. on the appliance!

WARNING
Blocked ventilation openings pose a risk of fire and damage!
▶ Always keep the ventilation openings clear. Always ensure that the appliance is properly ventilated!

NOTICE
Risk of damage due to condensate!
▶ Do not install the appliance directly alongside a further refrigerator/freezer.

Note
If you have several appliances next to one another, leave a gap of 70mm between appliances. Otherwise condensation will build up between the units.

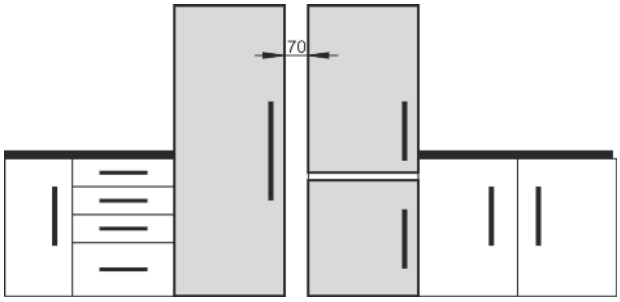

Fig. 11

❑ Before you connect the appliance, report any damage immediately to the delivery company.
❑ The floor of the installation site must be horizontal and even.
❑ Do not install the appliance in direct sunlight, next to an oven, radiator or similar.
❑ Install the appliance with the rear panel up against the wall and always use the supplied wall spacers (see below).
❑ Only ever move the appliance when it is empty.
❑ The surface supporting the appliance must be at the same level as the surrounding floor.
❑ Do not install the appliance on your own.
❑ The more coolant there is in the appliance, the larger the room in which the appliance is installed must be. If the room is too small, any leak may create a flammable mixture of gas and air. For each 8 g of coolant the installation space must be at least 1 m^3. Information on the coolant is on the model plate inside the appliance.
▶ Remove the protective film from the outside of the appliance.

NOTICE
Risk of damage from stainless steel care products!
The **stainless steel doors** and **stainless steel side panels** are treated with a premium surface finish.

Stainless steel care products attack these surfaces.
▶ Only use a soft, clean cloth to wipe down **finished door and side panel surfaces** and **painted door and side panel surfaces**. To remove heavy dirt, use a little water or neutral detergent. Alternatively, you can use a micro-fibre cloth.

▶ Remove the protective film from the decorative trims and drawer fronts.
▶ Remove all transit supports.

Spacers must be used to achieve the declared energy consumption and to prevent condensation in the event of high surrounding humidity. This increases the appliance depth by about 15 mm. The appliance will work perfectly well without the spacers but will have a slightly higher energy consumption.
▶ If your appliance comes with wall spacers, mount these on the back of the appliance, bottom left and right.

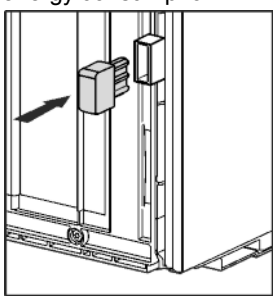

▶ Dispose of packaging material (see 4.6 Disposing of packaging) .
▶ Align the appliance so that it stands firmly and on a level by applying the accompanying spanner to the adjustable-height feet (A) and using a spirit level.

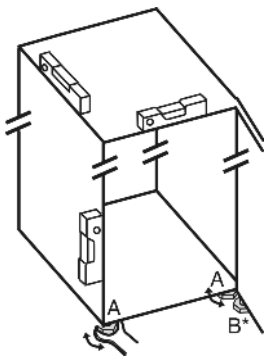

▶ Then support the door: Use saddle wrench SW10 to unscrew the base on mounting block (B) until it makes contact with the ground, then continue turning it for a further 90°.

Note
▶ Clean the appliance (see 6.4 Cleaning the appliance) .

*** Depending on model and options**

If the appliance is installed in a very damp environment, condensate may form on the outside of the appliance.
▶ Always see to good ventilation at the installation site.

4.3 Reversing the door

If necessary, you can change the way the door opens:

Ensure that the following tools are available:
- ❑ Torx® 25 (T25)
- ❑ Torx® 15 (T15)
- ❑ Slotted screwdriver
- ❑ Open-ended wrench SW10
- ❑ Spirit level
- ❑ Open-ended wrench supplied with the T25 tool
- ❑ If necessary, a cordless screwdriver
- ❑ Get a stepladder if necessary
- ❑ If necessary, a second person for assembly

4.3.1 Remove the upper soft stop mechanism

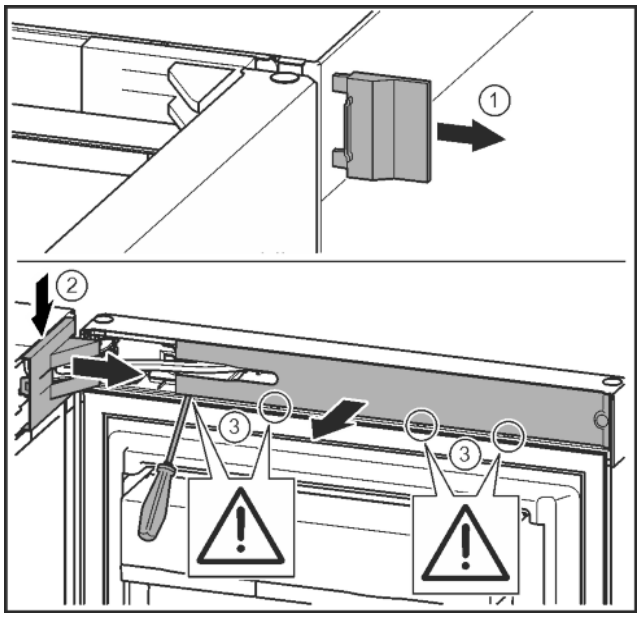

Fig. 12

▶ Open the top door.

NOTICE
Risk of damage!
If the door seal is damaged, the door may fail to close properly and the cooling will be inadequate.
▶ Do not damage the door seal with the screwdriver!

▶ Remove the outer cover. *Fig. 12 (1)*
▶ Disengage and release the bearing bracket cover. Remove the bearing bracket cover. *Fig. 12 (2)*
▶ Unlatch the panel with a slotted screwdriver and swivel it to one side. *Fig. 12 (3)*

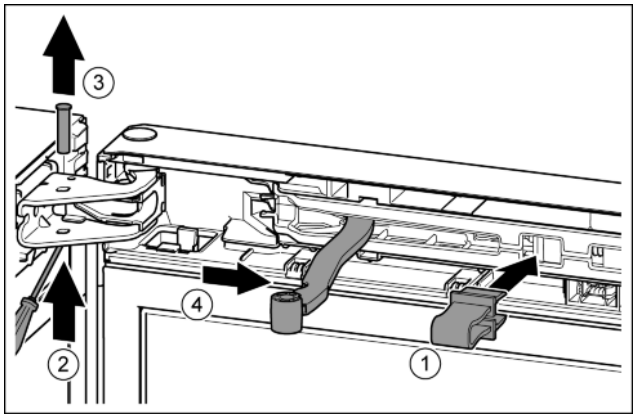

Fig. 13

CAUTION
Crushing hazard by joint folding up!
▶ Engage safety device.

▶ Engage the locking device in the opening. *Fig. 13 (1)*
▶ Unscrew the bolt with a screwdriver. *Fig. 13 (2)*
▶ Remove the bolt in an upward direction. *Fig. 13 (3)*
▶ Turn the hinge in the direction of the door. *Fig. 13 (4)*

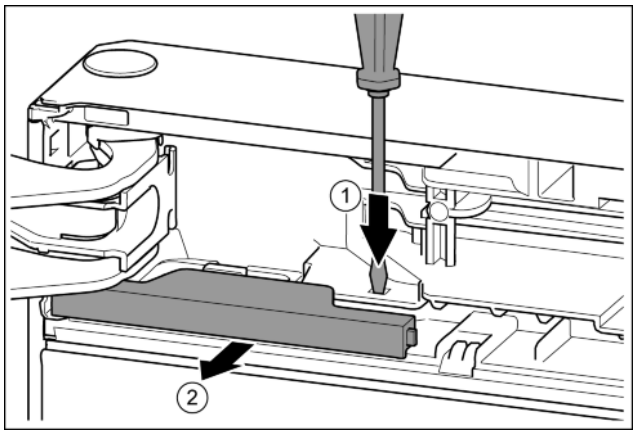

Fig. 14

▶ Press the tab with the slotted screwdriver. *Fig. 14 (1)*
▶ Pull cover out of the catch mechanism. *Fig. 14 (2)*

EN

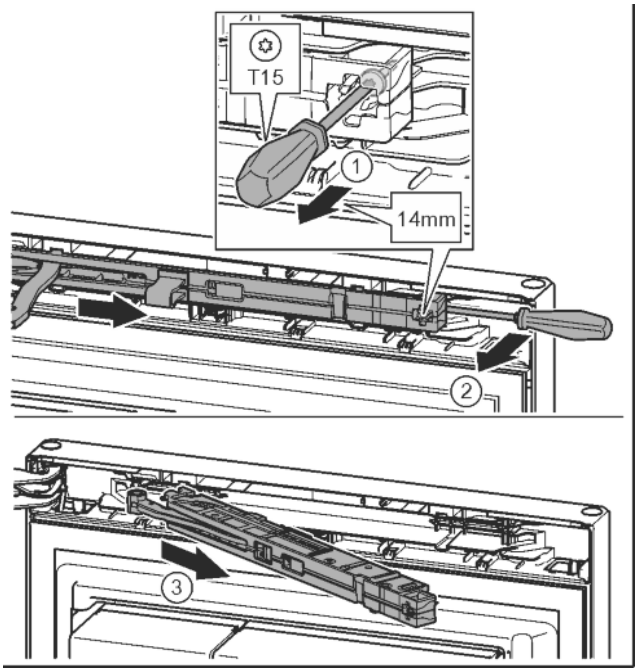

Fig. 15

- ▶ Undo the soft stop mechanism screw with a T15 screwdriver approx. 14 mm. *Fig. 15 (1)*
- ▶ Insert a screwdriver behind the soft stop mechanism on the handle side and rotate forwards. *Fig. 15 (2)*
- ▶ Remove the soft stop mechanism. *Fig. 15 (3)*

4.3.2 Remove the bottom soft stop mechanism

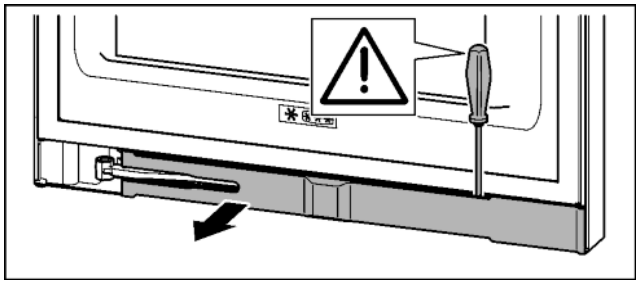

Fig. 16

- ▶ Open the bottom door.

NOTICE
Risk of damage!
If the door seal is damaged, the door may fail to close properly and the cooling will be inadequate.
- ▶ Do not damage the door seal with the screwdriver!

- ▶ Unlatch the panel with a slotted screwdriver and swivel it to one side.

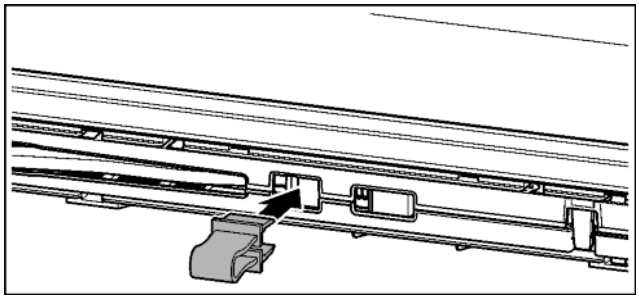

Fig. 17

CAUTION
Crushing hazard by joint folding up!
- ▶ Engage safety device.

- ▶ Engage the locking device in the opening.

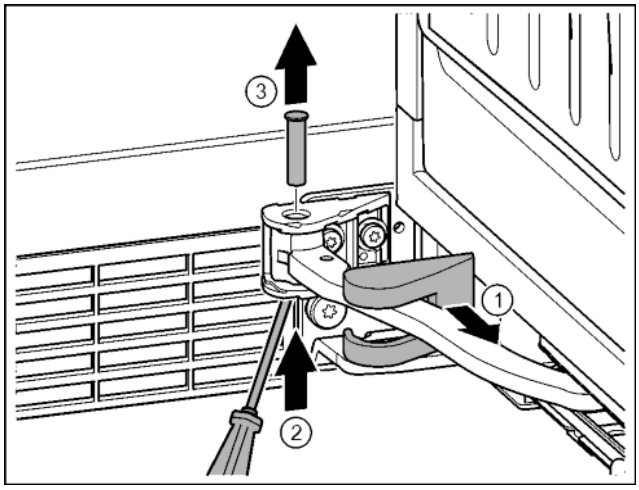

Fig. 18

- ▶ Remove the bearing bracket cover and push it along the hinge. *Fig. 18 (1)*
- ▶ Lift the bolt with a finger or screwdriver from below. *Fig. 18 (2)*
- ▶ Insert the screwdriver under the bolt head and remove. *Fig. 18 (3)*

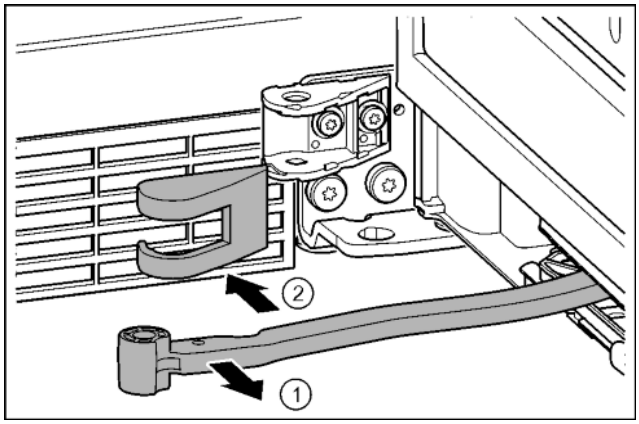

Fig. 19

- ▶ Turn the hinge in the direction of the door. *Fig. 19 (1)*
- ▶ Remove the bearing bracket cover. *Fig. 19 (2)*

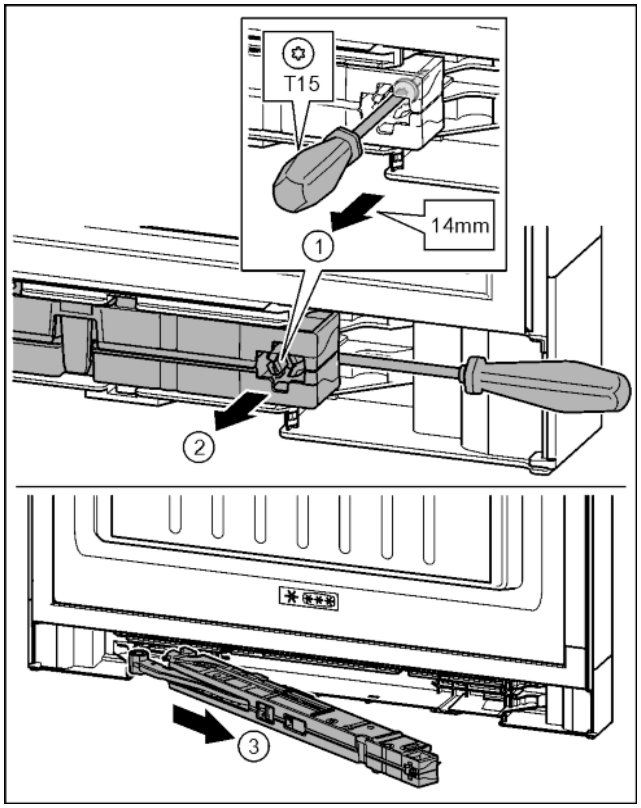

Fig. 20

- ▶ Undo the screw on the soft stop mechanism about 14 mm with a T15 screwdriver. *Fig. 20 (1)*
- ▶ Insert the screwdriver on the handle side behind the soft stop mechanism. Turn the unit forwards. *Fig. 20 (2)*
- ▶ Remove the unit. *Fig. 20 (3)*
- ▶ Set aside the soft stop mechanism.

4.3.3 Remove the cable connection

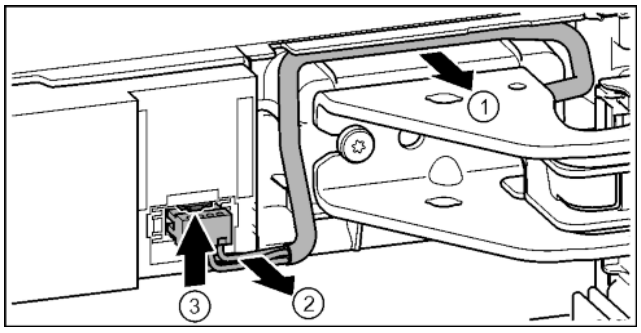

Fig. 21

- ▶ Carefully remove the cable over the bearing bracket from the guide. *Fig. 21 (1)*
- ▶ Carefully pull the cable strands out of the channel. *Fig. 21 (2)*
- ▶ Press the tab upwards and carefully remove the plug. *Fig. 21 (3)*

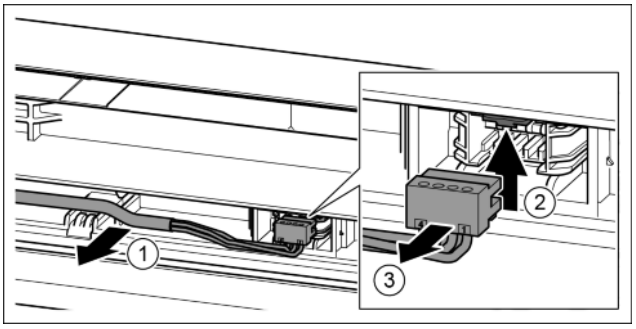

Fig. 22

- ▶ Carefully remove the grey cable from the guide in the door. *Fig. 22 (1)*
- ▶ Press the tab upwards. *Fig. 22 (2)*
- ▶ Carefully remove the plug. *Fig. 22 (3)*

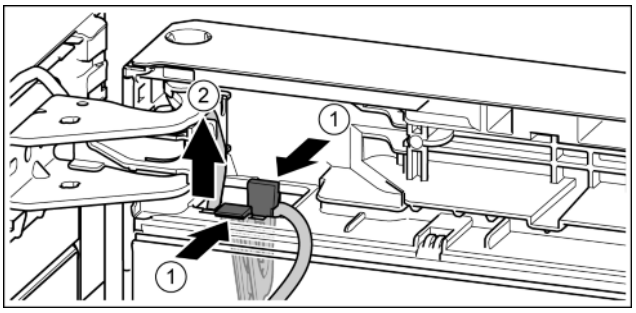

Fig. 23

- ▶ Press the tab. *Fig. 23 (1)*
- ▶ Remove the cable holder with its cable. *Fig. 23 (2)*

4.3.4 Removing the top door

Note

- ▶ Remove any food from the door racks before removing the door, so that no food falls out.

EN

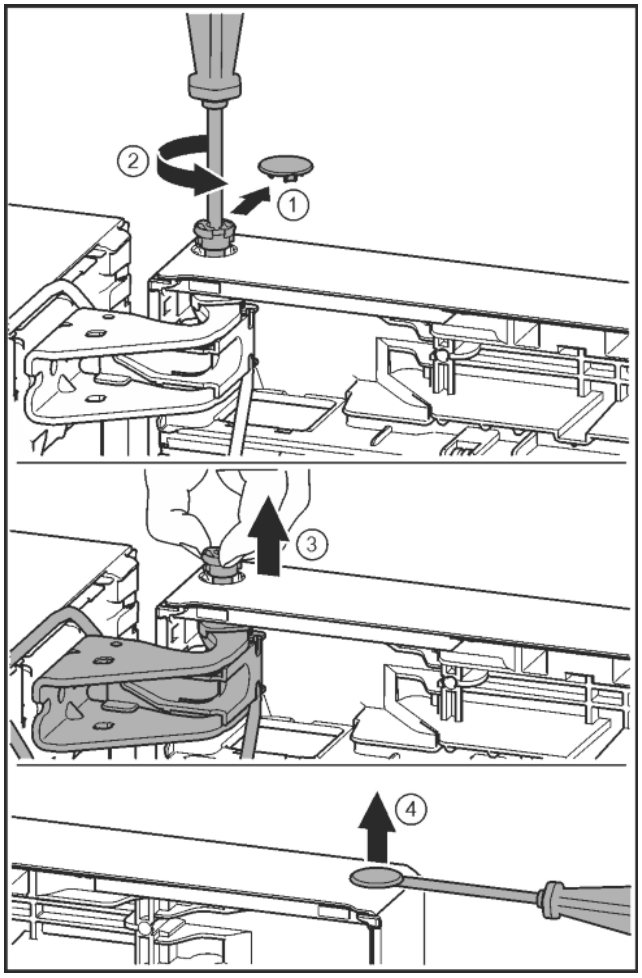

Fig. 24

CAUTION
Risk of injury if the door tips!
- ▶ Take good hold of the door.
- ▶ Set down the door carefully.

- ▶ Carefully remove the protective cover. *Fig. 24 (1)*
- ▶ Undo the bolt a little with a T15 screwdriver. *Fig. 24 (2)*
- ▶ Hold the door and remove the bolts with your fingers. *Fig. 24 (3)*
- ▶ Lift the door and set it aside.
- ▶ Carefully lift the plugs out of the door bearing bush with a slotted screwdriver and remove. *Fig. 24 (4)*

4.3.5 Removing the lower door

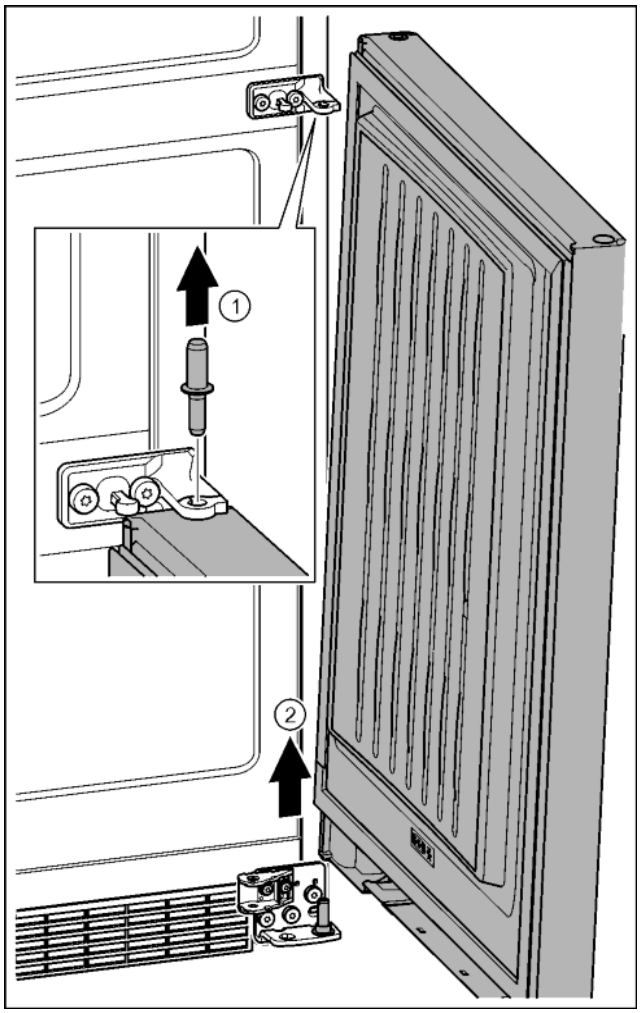

Fig. 25

CAUTION
Risk of injury if the door tips!
- ▶ Take good hold of the door.
- ▶ Set down the door carefully.

- ▶ Pull out the bolts towards the top. *Fig. 25 (1)*
- ▶ Swing the door out, pull it upwards and set it aside. *Fig. 25 (2)*

4.3.6 Moving the upper bearing parts to the other side

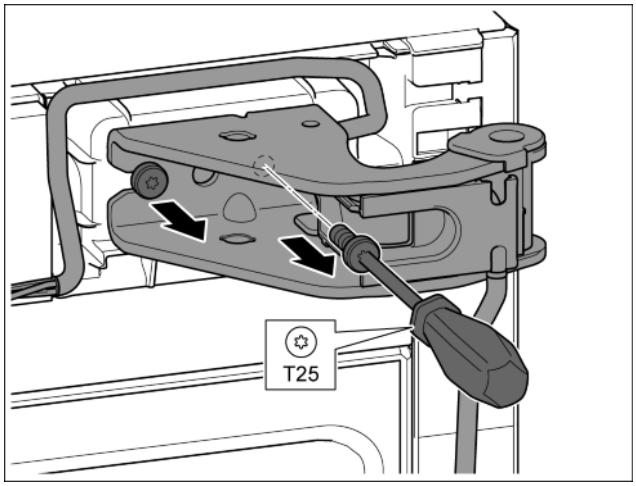

Fig. 26

▶ Remove both screws with the T25 screwdriver.
▶ Lift and remove the bearing bracket and cable.

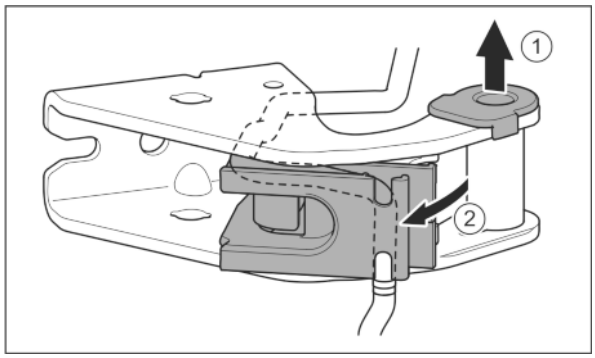

Fig. 27

▶ Pull the bearing bush out of the guide. *Fig. 27 (1)*
▶ Swing the cable holder out. *Fig. 27 (2)*

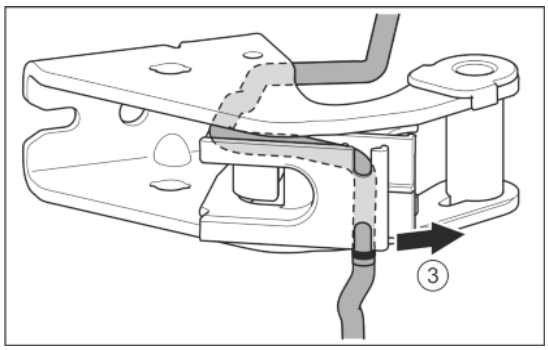

Fig. 28

▶ Remove the cable from the guide. *Fig. 28 (3)*

NOTICE
Cable crushing
▶ Pay attention to the mark when positioning the cable. The shorter end of the cable is positioned from the mark in the cable holder.

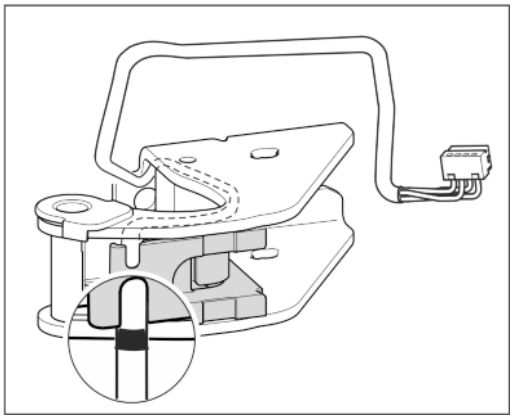

Fig. 29

▶ Insert the cable mirror inverted.
▷ The black mark must be positioned on the edge of the cable holder.
▶ Swing the cable holder in.

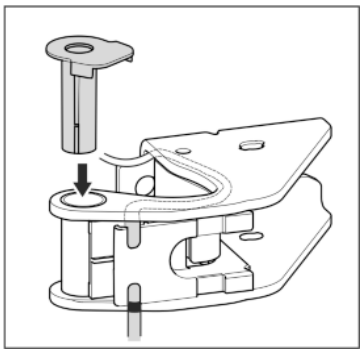

Fig. 30

▶ Insert the bearing bush from the other side and click into place.

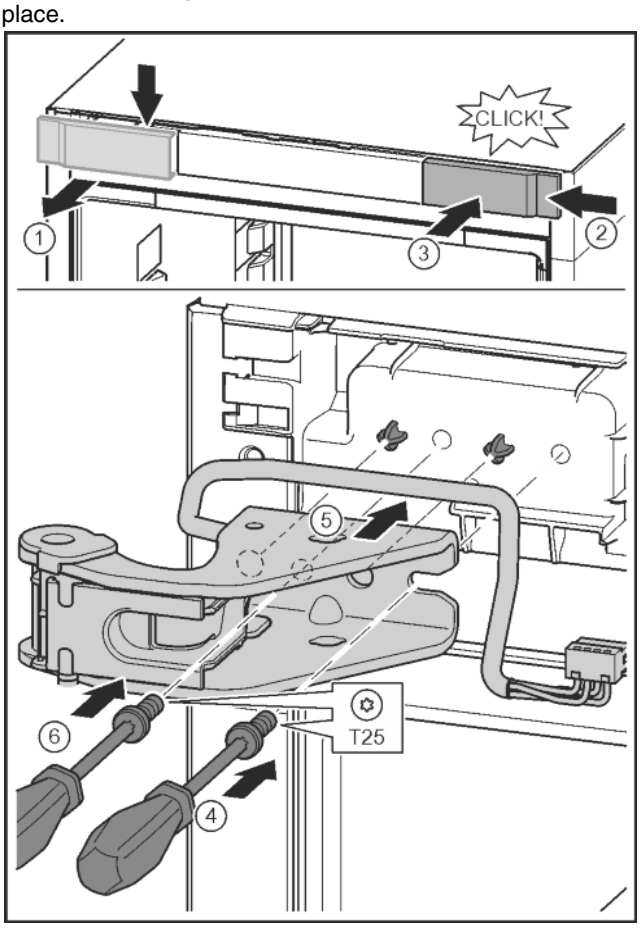

Fig. 31

▶ Release the cover and remove from the side. *Fig. 31 (1)*
▶ Rotate the cover 180° and clip onto the other side from the right. *Fig. 31 (2)*

EN

▶ Click the cover into place. *Fig. 31 (3)*
▶ Position the screw with a T25 screwdriver. *Fig. 31 (4)*
▶ Position the upper bearing bracket. *Fig. 31 (5)*
▷ Place the pins in the provided screw holes.
▶ Tighten the screw. *Fig. 31 (4)*
▶ Insert the screw with a T25 screwdriver and tighten. *Fig. 31 (6)*

4.3.7 Moving the central bearing parts to the other side

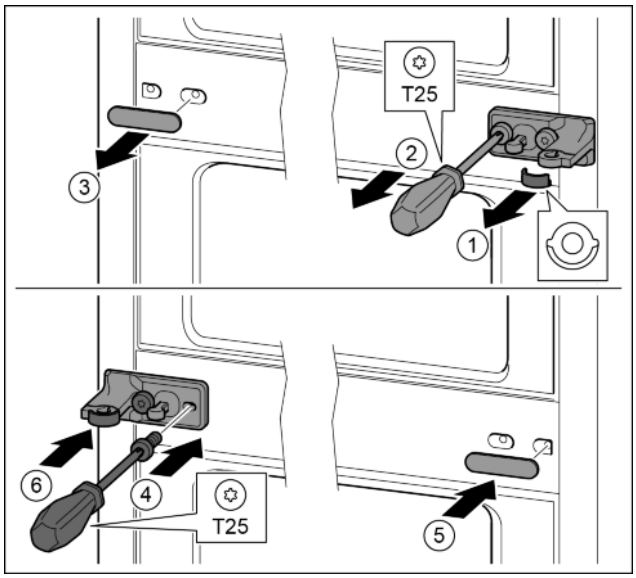

Fig. 32

▶ Remove the washer. *Fig. 32 (1)*
▶ Remove the screws with the T25 screwdriver. *Fig. 32 (2)*
▶ Remove the cover carefully. *Fig. 32 (3)*
▶ Screw the bearing bracket and the film rotated 180° firmly onto the other side. *Fig. 32 (4)*
▶ Attach the cover rotated 180° onto the other side. *Fig. 32 (5)*
▶ Push the washer in from the front. *Fig. 32 (6)*

4.3.8 Moving the lower bearing parts to the other side

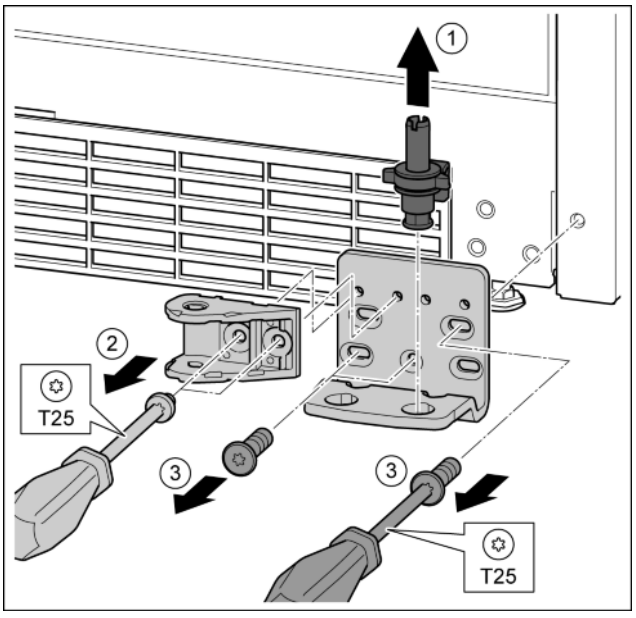

Fig. 33

▶ Lift the bearing pin completely upward and remove. *Fig. 33 (1)*
▶ Remove the screws with the T25 screwdriver and remove the soft stop connection. *Fig. 33 (2)*
▶ Undo the screws with a T25 screwdriver and remove the bearing bracket *Fig. 33 (3)*

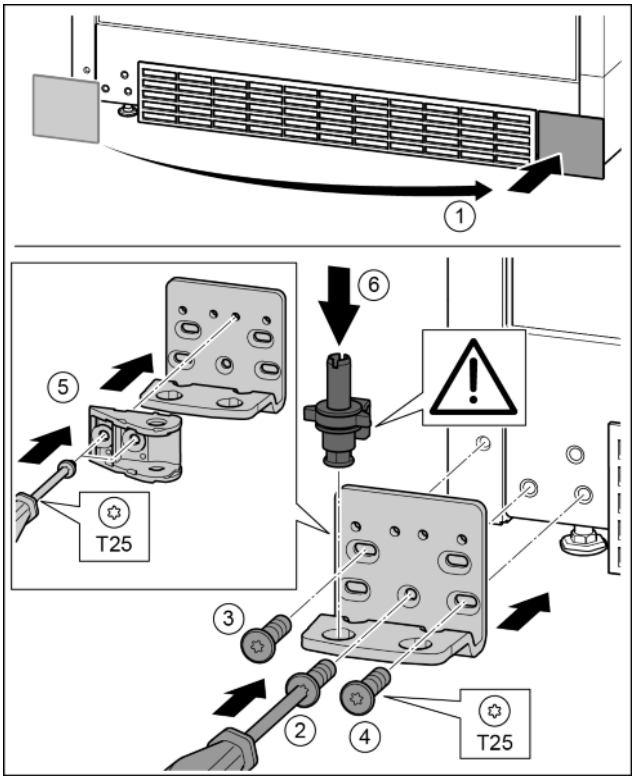

Fig. 34

▶ Remove the cover and fix it on the other side. *Fig. 34 (1)*
▶ Place the bearing bracket on the other side and screw in with the aid of a T25 screwdriver. Start with screw 2 at the bottom in the middle. *Fig. 34 (2)*
▶ Screw in screws 3 and 4. *Fig. 34 (3, 4)*
▶ Rotate the soft stop connection 180°. Screw in with a T25 screwdriver on the other side of the bearing bracket. *Fig. 34 (5)*
▶ Insert the bearing pin completely. Make sure that the catch mechanism is pointing to the rear. *Fig. 34 (6)*

4.3.9 Moving the door bearing parts to the other side

Top door

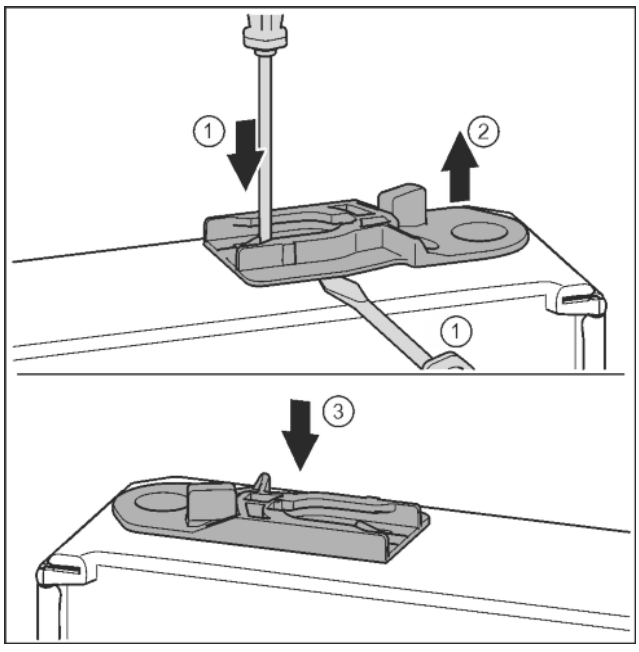

Fig. 35

*** Depending on model and options**

- ▶ Underside of door faces upwards: Turn the door.
- ▶ Pull out the guide bush: Press the tab with a slotted screwdriver and, at the same time, insert the slotted screwdriver under the guide bush. *Fig. 35 (1, 2)*
- ▶ Slide the guide bush included in the scope of supply to the other side of the housing. *Fig. 35 (3)*
- ▶ Upper side of door faces upwards: Turn the door.

4.3.10 Moving the handles to the other side

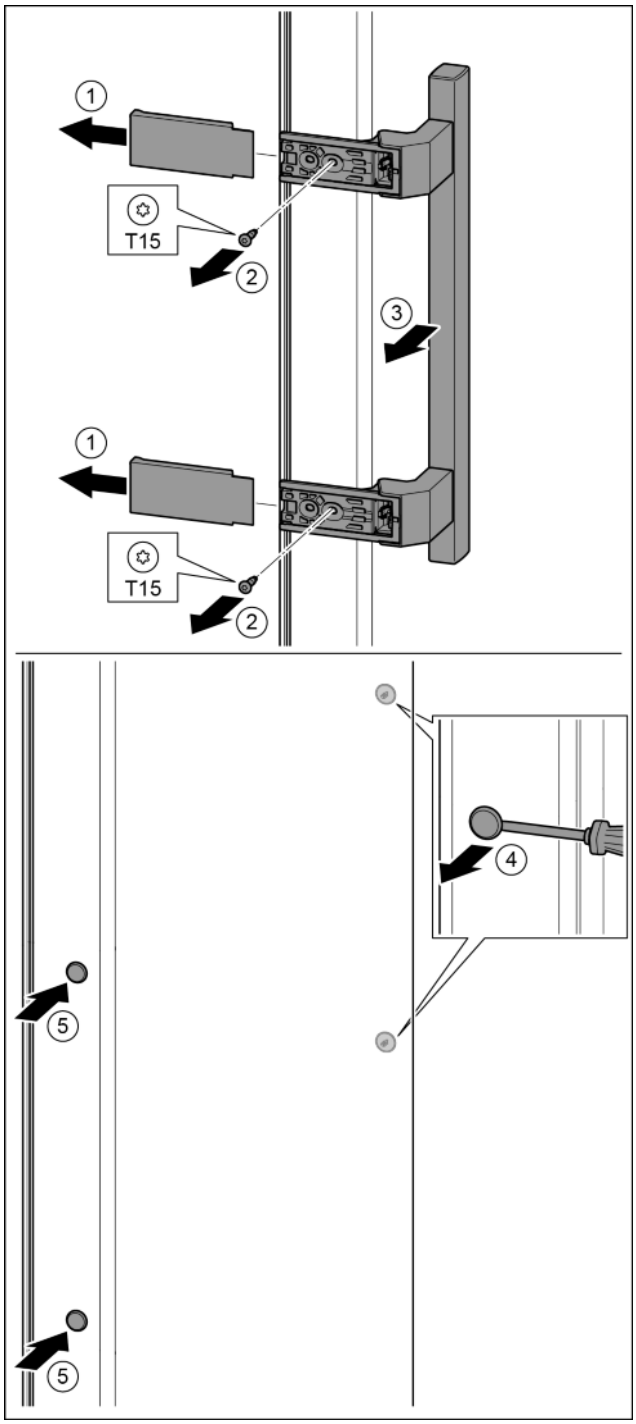

Fig. 36

- ▶ Pull off the cover. *Fig. 36 (1)*
- ▶ Remove the screws with the T15 screwdriver. *Fig. 36 (2)*
- ▶ Remove the handle. *Fig. 36 (3)*
- ▶ Carefully lift up the side plugs with a slotted screwdriver and pull them out. *Fig. 36 (4)*
- ▶ Insert the plugs again on the other side. *Fig. 36 (5)*

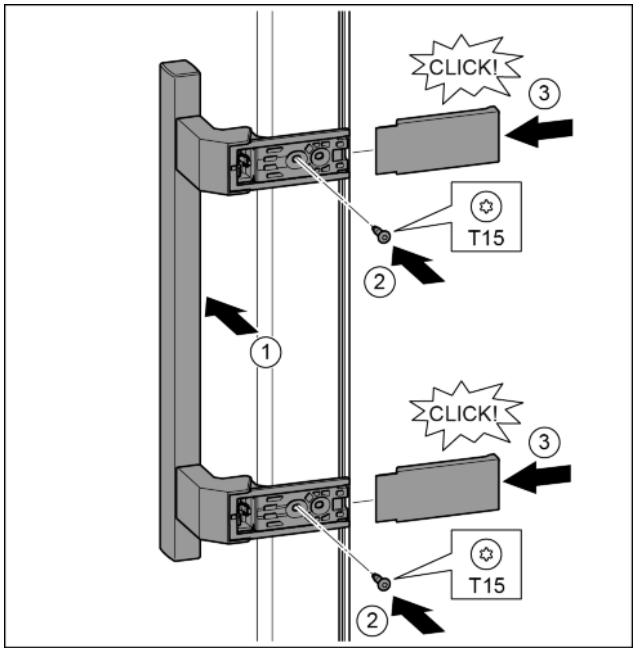

Fig. 37

- ▶ Position the handle on the other side. *Fig. 37 (1)*
- ▷ The screw holes must be exactly above each other.
- ▶ Tighten the screws with the T15 screwdriver. *Fig. 37 (2)*
- ▶ Position the covers on the side and push in. *Fig. 37 (3)*
- ▷ Ensure that it clicks into place.

4.3.11 Fitting the bottom door

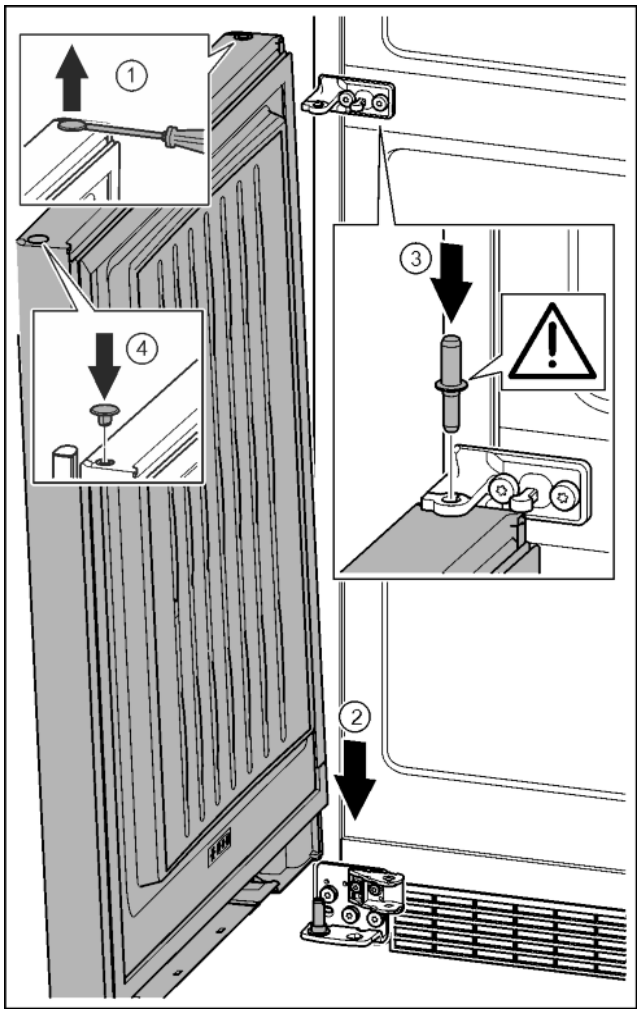

Fig. 38

EN

- ▶ Carefully lift up the plugs with a slotted screwdriver and remove them. *Fig. 38 (1)*
- ▶ Position the door from above onto the lower bearing pins. *Fig. 38 (2)*
- ▶ Insert the centre bearing pin through the centre bearing bracket into the lower door. Make sure that the catch mechanism is pointing to the rear. *Fig. 38 (3)*
- ▶ Insert the plugs again on the other side of the door. *Fig. 38 (4)*

4.3.12 Fitting the upper door

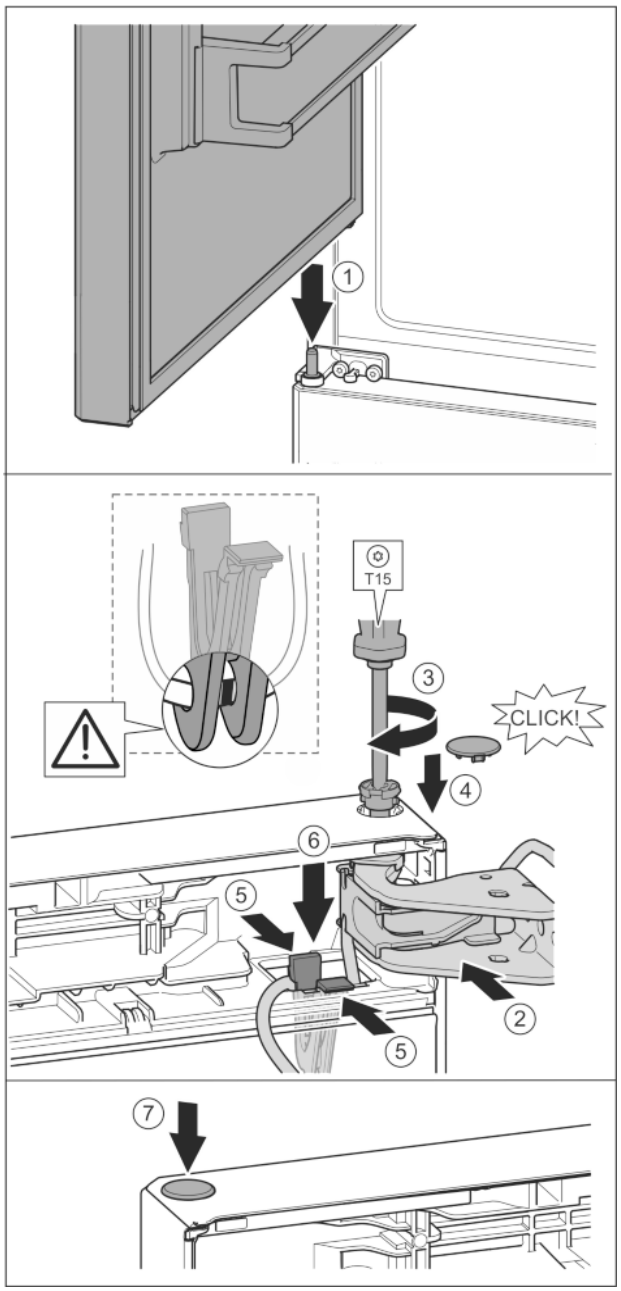

Fig. 39

- ▶ Place the upper door on the centre bearing pins *Fig. 39 (1)*
- ▶ Align the top of the door with opening in the bearing bracket. *Fig. 39 (2)*
- ▶ Insert the bolt and tighten with a T15 screwdriver. *Fig. 39 (3)*
- ▶ Fit the protective cover to protect the door: Insert the protective cover and check that it is attached to the door. If not, insert the bolt fully. *Fig. 39 (4)*

NOTICE
Cable crushing
- ▶ The mark on the cable must be centred in the holder. The tab with the longer opening must point forwards.
- ▶ Insert the holder with its cable into the opening. *Fig. 39 (5)*
- ▶ Press the holder downwards until the tab clicks into place. *Fig. 39 (6)*
- ▶ Insert the plugs. *Fig. 39 (7)*

4.3.13 Fitting the cable connection

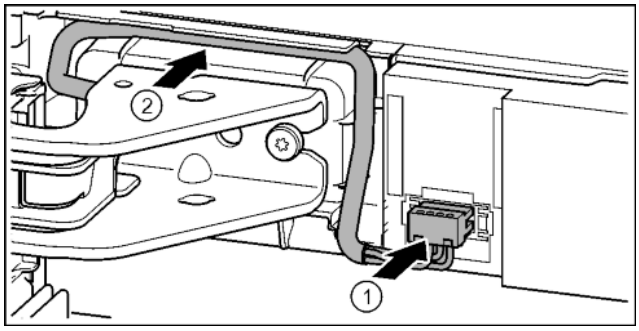

Fig. 40

- ▶ Engage the plug above the upper bearing bracket and carefully place the cable strands into the channel. *Fig. 40 (1)*
- ▶ Carefully position the grey cable in the guide above the top bearing bracket. *Fig. 40 (2)*

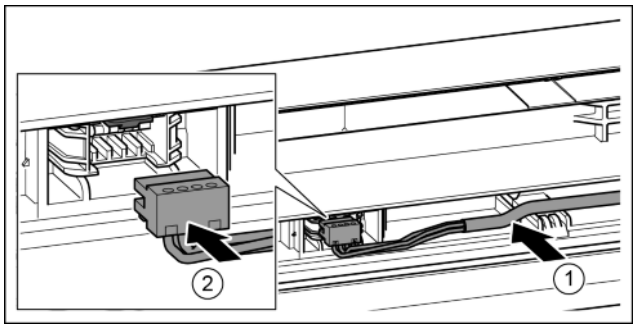

Fig. 41

- ▶ Insert the grey cable into the guide in the top door. *Fig. 41 (1)*
- ▶ Engage the plug. *Fig. 41 (2)*
- ▶ Position the remaining cable length as a loop in the guide, if required.

4.3.14 Aligning the doors

WARNING
Risk of injury due to the door dropping out!
If the bearing parts are not screwed into place firmly enough, the door may drop out. This may lead to severe injuries. What is more, the door may not close and therefore the appliance may fail to cool properly.
- ▶ Screw the turn hinges firmly into place with 4 Nm.
- ▶ Check all of the screws and retighten if necessary.

- ▶ Align the doors flush with the appliance housing using the two oblong holes in the lower bearing bracket and centre bearing bracket if needed. To do this undo the middle screw in the bottom bearing bracket with the T25 tool supplied. Undo the remaining screws a little with the T25 tool or with a T25 screwdriver and align using the slotted holes. Undo the screws in the middle bearing bracket with the T25 tool and align the middle bearing bracket using the slotted holes.
- ▶ Support the door: Take off the adjustable foot on the bearing bracket using the open-ended wrench SW10 until it comes into contact with the floor, then turn an additional 90°.

4.3.15 Fit the bottom soft stop mechanism

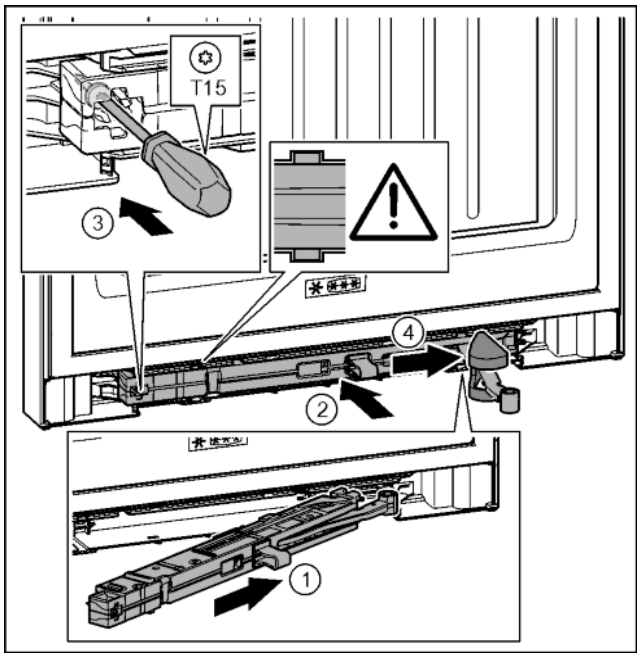

Fig. 42

- ▶ Slide the soft stop mechanism on the bearing bracket side at an angle into the slot as far as the limit stop. *Fig. 42 (1)*
- ▶ Slide the soft stop mechanism fully into the slot. *Fig. 42 (2)*
- ▷ The unit is positioned correctly when the rib on the soft stop mechanism is in the guide.
- ▶ Tighten the screw with the T15 screwdriver. *Fig. 42 (3)*
- ▶ Push the cover over the hinge. *Fig. 42 (4)*

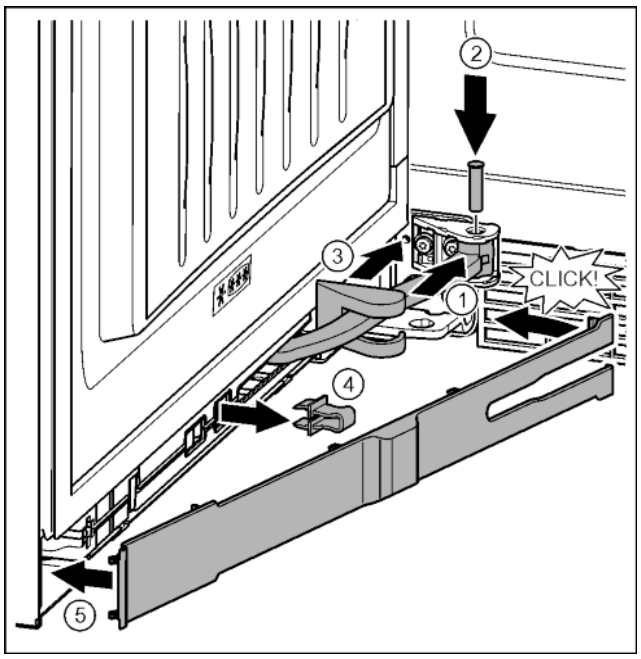

Fig. 43

The door is open 90°

- ▶ Turn the hinge in the mount. *Fig. 43 (1)*
- ▶ Insert the bolt with a T15 screwdriver in the mount and hinge. Make sure that the catch mechanism is sitting correctly in the groove. *Fig. 43 (2)*
- ▶ Push the bearing bracket cover along the hinge and fit on the mount. *Fig. 43 (3)*
- ▶ Remove the locking device. *Fig. 43 (4)*
- ▶ Position the panel on the handle side and swing it in. *Fig. 43 (5)*
- ▷ The panel is clicked into place.
- ▶ Close the bottom door.

4.3.16 Fit the top soft stop mechanism

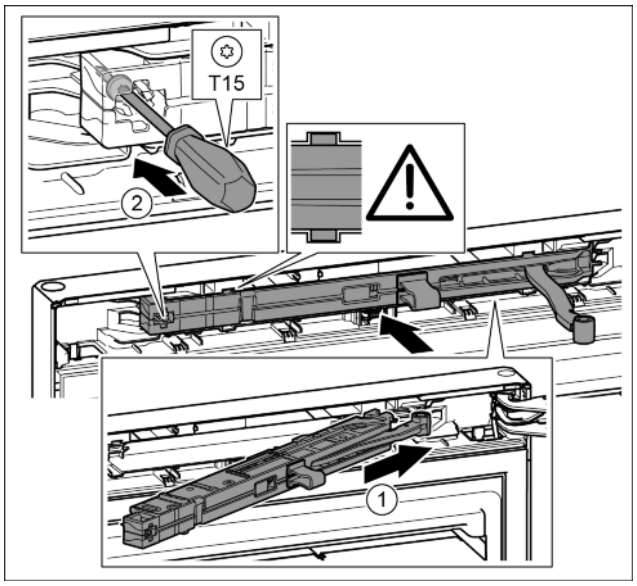

Fig. 44

- ▶ Slide the soft stop mechanism on the bearing bracket side at an angle into the slot as far as the limit stop. *Fig. 44 (1)*
- ▶ Slide the unit in fully.
- ▷ The unit is positioned correctly when the rib on the soft stop mechanism is in the guide in the housing.
- ▶ Tighten the screw with the T15 screwdriver. *Fig. 44 (2)*

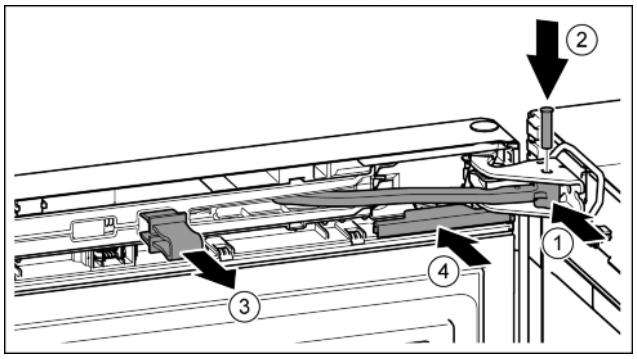

Fig. 45

The door is open 90°.

- ▶ Turn the hinge in the bearing bracket. *Fig. 45 (1)*
- ▶ Insert the bolt in the bearing bracket and hinge. Make sure that the catch mechanism is sitting correctly in the groove. *Fig. 45 (2)*
- ▶ Remove the locking device. *Fig. 45 (3)*
- ▶ Slide on the cover. *Fig. 45 (4)*

EN

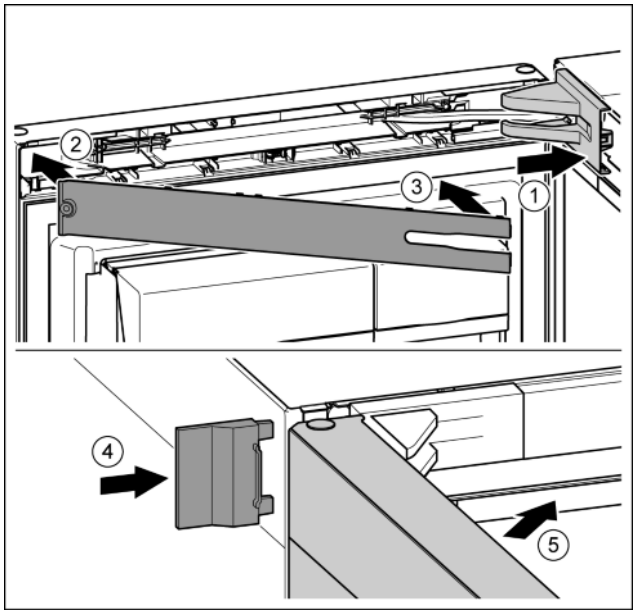

Fig. 46

▶ Position the bearing bracket and engage. If necessary push apart carefully. *Fig. 46 (1)*
▶ Position the panel. *Fig. 46 (2)*
▶ Swing in the panel and click into place. *Fig. 46 (3)*
▶ Slide on the external cover. *Fig. 46 (4)*
▶ Close the upper door. *Fig. 46 (5)*

4.4 Water connection

WARNING
Danger of electric shock!
▶ Disconnect the appliance by unplugging it before you connect it to the water line.
▶ Shut off the water supply before you connect the water feed lines of the IceMaker.
▶ The connection to the drinking water system may be carried out only by a qualified gas fitter and plumber.

WARNING
Risk of poisoning!
▶ The water quality has to comply with the drinking water ordinance of the respective country (e.g. 98/8
▶ Connect to the drinking water supply only.
▶ The IceMaker serves exclusively for making ice cubes in household quantities and has to be operated with water suitable for the purpose.

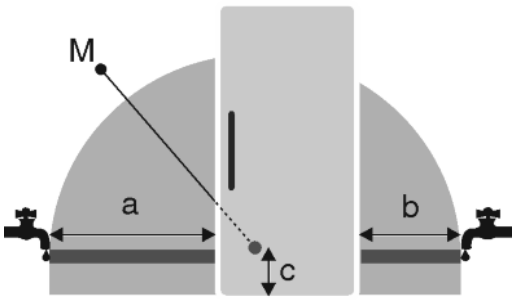

Fig. 47

a	b	c	M
~ 1100 mm	~ 700 mm	~ 110 mm	Solenoid valve

- The water pressure must be between 0.15 MPa and 0.6 MPa (1.5 bar - 6 bar).
- The water must be connected to the appliance via a cold water pipe that can withstand the operating pressure and complies with hygiene standards.
  Use the stainless steel hose supplied (length 1.5 m). Do not reuse old hoses. A 3 m hose is available as an optional extra. This must be professionally installed.
  A filter with a seal is located in the hose connector.
- A stopcock must be provided between the hose line and the domestic water connection to cut off the water supply if necessary.
- The stopcock must be located outside the back of the appliance and be within easy reach so that the appliance can be inserted as deeply as possible and the stopcock can be turned off quickly. Stick to the clearances.
- All devices and equipment used to supply water must comply with the regulations in force in the respective country.
- Do not damage or kink the water supply line during installation.

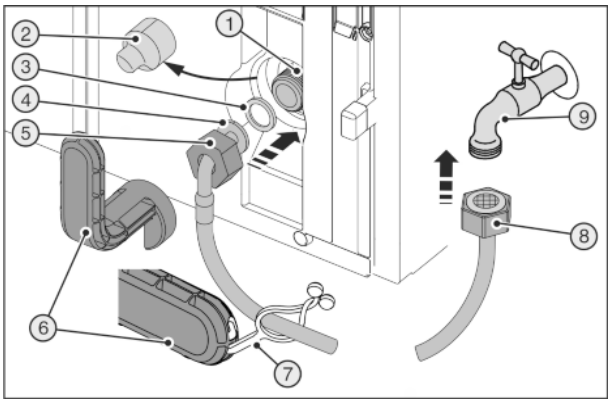

Fig. 48

The solenoid is located at the bottom on the back of the appliance. It has a metric R3/4 connecting thread.

For specialist staff:

Connecting the stainless steel hose: The back of the appliance must be accessible.

WARNING
Broken auxiliary tool *Fig. 48 (6)*.
Cuts.
▶ Only use an auxiliary tool *Fig. 48 (6)* at room temperature.

Connecting the hose to the appliance:
▶ Remove the cover *Fig. 48 (2)*.
▶ Easy to fit: Place the straight end of the hose *Fig. 48 (8)* to the left on the floor.
▶ Slide the nut *Fig. 48 (5)* over the angled end of the hose *Fig. 48 (4)* up to the end and secure.
▶ Moisten *Fig. 48 (3)* the seal and push onto the nut *Fig. 48 (5)*.
▷ The seal *Fig. 48 (3)* lies flat and is easily retained.

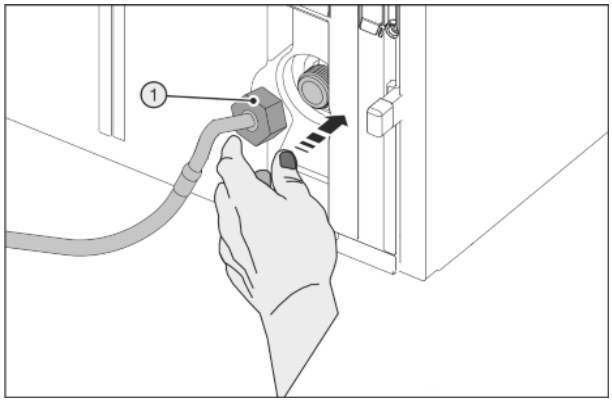

Fig. 49

NOTICE
Damaged solenoid thread pitch.
The solenoid leaks: Water may leak out.
▶ Position the nut *Fig. 49 (1)* carefully and screw it directly onto the thread with two fingers until it is seated securely.

▶ Tighten the nut *Fig. 49 (1)*clockwise with the auxiliary tool *Fig. 48 (6)* until maximum torque is reached and the auxiliary tool *Fig. 48 (6)* overtightens.

Connecting the hose to the stopcock:
▶ Screw the nut *Fig. 48 (8)* onto the stopcock *Fig. 48 (9)*.
▶ Tighten the nut *Fig. 48 (8)*clockwise with the auxiliary tool *Fig. 48 (6)* until maximum torque is reached and the auxiliary tool *Fig. 48 (6)* overtightens.
▶ Turn the water supply stopcock *Fig. 48 (9)* on and check the whole water system for leaks.
▶ Flushing the IceMaker: **Turning the IceMaker on chapter** .
▶ Hook the clip *Fig. 48 (7)* into the auxiliary tool *Fig. 48 (6)* and fix it to the stainless steel pipe to store it.

4.5 Insertion into a row of kitchen units

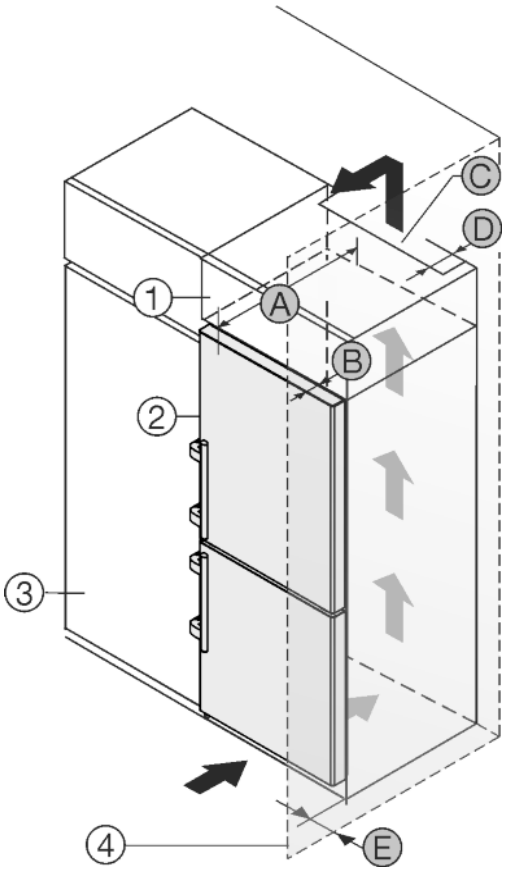

Fig. 50

A [mm]	B [mm]	C [cm²]	D [mm]	E [mm]
665 x	65	Min. 300	Min. 50	Min. 46

x If wall spacers are used, the dimensions increase by 15 mm (see 4.2 Installing the appliance) .

The dimensions apply for an opening angle of 90 °. Spacing angles will vary according to the opening angle.

You can purchase a kit to limit the door opening angle to 90° on soft closing appliances. Please contact our customer service team.

The appliance can be built into kitchen units. A top cupboard *Fig. 50 (2)* can be added above the appliance in order to bring the appliance *Fig. 50 (1)* up to the height of the fitted kitchen units.

The appliance can be installed right next to the kitchen cabinet *Fig. 50 (3)*. The appliance must stick out by the depth *Fig. 50 (B)* from the front of the cabinet so that the doors can be opened fully. The appliance may protrude further depending on the depth of the kitchen cabinets and whether wall spacers are used.

EN

NOTICE
Danger of overheating due to insufficient air ventilation!
The compressor may be damaged if there is insufficient air ventilation.
▶ Take care to ensure adequate air ventilation.
▶ Observe the ventilation requirements.

Ventilation requirements:
- Spacer ribs on the back of the appliance provide sufficient air ventilation. In the final appliance position, these must not be placed in recesses or cut-outs.
- There must be a ventilation shaft with the depth *Fig. 50 (D)* at the back of the top cupboard over the entire width of the cupboard.
- The ventilation shaft *Fig. 50 (C)* must be observed under the ceiling.
- the larger the ventilation space, the more energy-saving the appliance is in operation.

If the appliance is installed with the hinges next to a wall *Fig. 50 (4)* the distance *Fig. 50 (E)* between the appliance and the wall must be observed. This is how far the handle protrudes when the door is open.

4.6 Disposing of packaging

WARNING
Danger of suffocation due to packing material and plastic film!
▶ Do not allow children to play with packing material.

The packaging is made of recyclable materials:
- corrugated board/cardboard
- expanded polystyrene parts
- polythene bags and sheets
- polypropylene straps
- nailed wooden frame with polyethylene panel*

▶ Take the packaging material to an official collecting point.

4.7 Connecting the appliance

WARNING
Failure to connect properly
Fire hazard.
▶ Do not use an extension cable.
▶ Do not use distributor blocks.

NOTICE
Failure to connect properly
Damage to the electronics.
▶ Do not use a standalone inverter.
▶ Do not use an energy saving plug.

Note
Only use the power connection lead supplied.
▶ A longer power connection lead can be ordered from Customer Service.

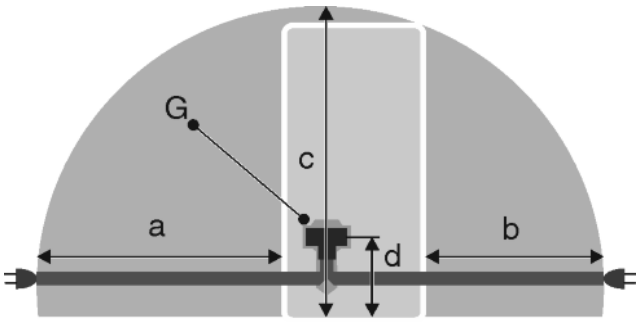

Fig. 51

a	b	c	d	G
~ 1800 mm	~ 1400 mm	~ 2100 mm	~ 200 mm	Appliance plugs

Ensure that the following conditions are met:
- The type of current and voltage at the installation site correspond to the information on the model plate (see 1 Appliance at a glance) .
- The socket is earthed according to the regulations and fused.
- The fuse tripping current is between 10 and 16 A.
- The socket is easily accessible.
- The socket is outside the back of the appliance area in the specified area *Fig. 51 (a, b, c)*.

▶ Check the electrical connection.
▶ Insert the appliance plug *Fig. 51 (G)* into the back of the appliance. Ensure that it clicks into place.
▶ Connect the power plug to the power supply.
▷ The Liebherr logo appears on the screen.
▷ The display switches to the standby symbol.

4.8 Switching on the appliance

Note
Demonstration mode is active: *DemoMode active!*, appears on the screen.
▶ Cancelling demo mode. (see 7 Malfunctions) .

Note
The manufacturer recommends:
▶ Store frozen produce at -18 °C or colder.

Connect and switch on appliance approx. 2 hours before loading for the first time. (see 4.7 Connecting the appliance)

4.8.1 Initial operation

The basic system settings are defined in 4 steps.
▶ Press the standby symbol.

Step 1: Set language
▶ Display other languages: Press navigation arrows if required.
▶ Choose language.: Press selection indicator next to selected language.
▶ Press *Next*.

Step 2: Set date
▶ Choose date format: Press selection indicator next to selected date format.
▶ Set day, month and year: Press navigation arrows repeatedly or press and hold.
▶ Display date on status screen: Press status button On/Off if required
▶ Press *Next*.

Step 3: Set time
▶ Choose time format: Press selection indicator next to selected time format.
▶ Set hours and minutes: Press navigation arrows repeatedly or press and hold.
▶ Press *Next*.

Step 4: Set temperature unit
▶ Choose temperature unit: Press selection indicator next to selected temperature unit.
▶ Press *Next*.
▷ The display switches to the home screen.
▷ The appliance is switched on and set to the displayed temperature.

4.8.2 Further operation

If the appliance has been disconnected from the mains supply, the language needs to be reset.
▶ Display other languages: Press navigation arrows if required.
▶ Choose language.: Press selection indicator next to selected language.
▶ Press *Next*.
▷ The display switches to the home screen.
▷ The appliance starts with the last settings in the *Day-to-Day programme*.

4.8.3 Switch on appliance

The standby symbol is displayed in refrigerator compartment, the BioFresh Plus and freezer compartment field:
▶ Press the freezer compartment, BioFresh Plus compartment or refrigerator compartment field.
▶ Display more temperature values: Press navigation arrows if required.
▶ Press temperature value.
▷ The appliance is switched on and set to the displayed temperature.

Screen is black:
▶ Press screen.
▷ The standby symbol appears on the screen.

The standby symbol is displayed on the whole screen:
▶ Press standby symbol.
▶ The display switches to the home screen.
▷ The appliance starts with the last settings in the *Day-to-Day programme*.

4.8.4 Switch on the refrigerator and BioFresh Plus compartment.

The standby symbol is displayed in the refrigerator compartment and BioFresh Plus field.
▶ Press the refrigerator compartment or BioFresh Plus field.
▶ Display more temperature values: Press navigation arrows if required.
▶ Press temperature value.

4.9 SmartDevice box

SmartDevice box: Start-up instructionswww.smartdevice.liebherr.com/install



If the **SmartDevice box** (SDB) is inserted correctly the menu below appears. The device is supplied with WLAN activated.

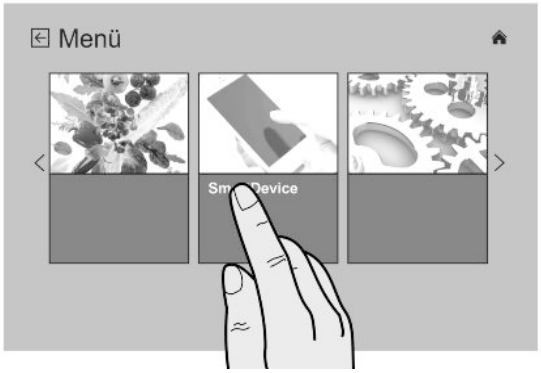

Fig. 52

To use more WiFi functions, open the SmartDevice menu.

▶ Press **SmartDevice** lettering.
▷ The **SmartDevice** menu opens.

Menu item SmartDevice

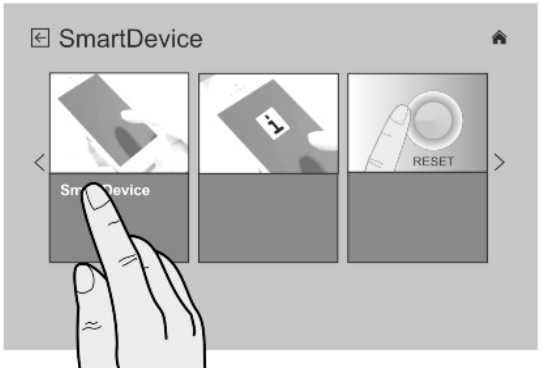

Fig. 53

▶ Press the **SmartDevice** button.
▷ The sub menu to activate or deactivate the **SmartDevice box** is displayed.

Turning the SmartDevice box on/off

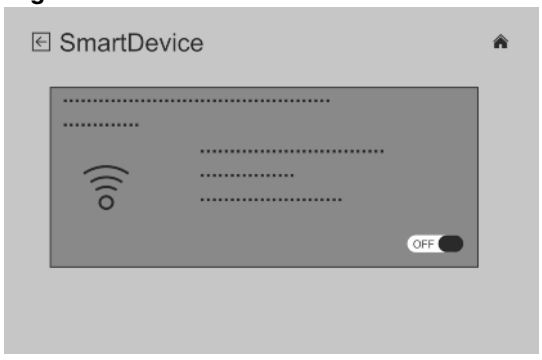

Fig. 54

▶ Activate or deactivate the **SmartDevice box** with the slider on the bottom right of the menu.
▷ If the slider is moved to OFF = the **SmartDevice box** is deactivated.
▷ If the slider is moved to ON = the **SmartDevice box** is activated.
▶ To leave this menu, press the Home button.

SmartDevice INFO menu item

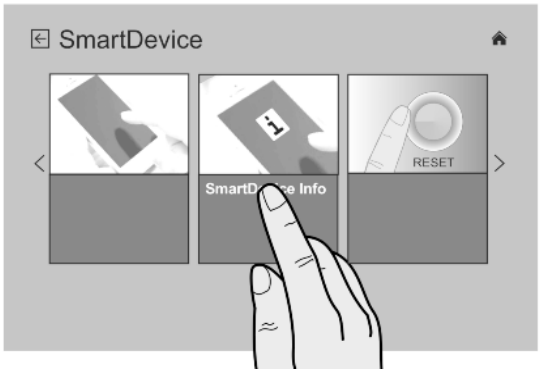

Fig. 55

You can call up the status of your **SmartDevice box** in this menu item.

▶ Press the **SmartDevice INFO** button.
▷ The **SmartDevice information display** opens.

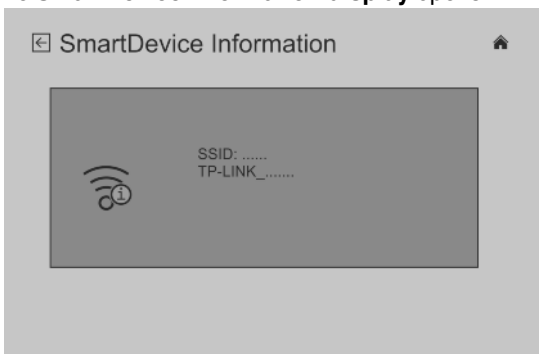

Fig. 56

▷ The following statuses can be displayed:
▷ SSID: ***WPS*** = The **SmartDevice box** is in **WPS mode** for 3 minutes. An automatic connection to the **SmartDevice box** can be established.
▷ SSID: LHSDB_xxxxxxxxx = the **SmartDevice box** is in **manual connection mode** for 30 minutes. The **SmartDevice box** transmits a special network to which you can connect to send WLAN data.
▷ SSID: empty = The **SmartDevice box** is in **sleep mode**. Please reset the **WIFI** and connect your **SmartDevice box** to your home network.
▷ SSID: TP-LINK_2D43A2 or Fritz!Box7069 = The **SmartDevice box** is now connected to your home network.

WIFI RESET menu item

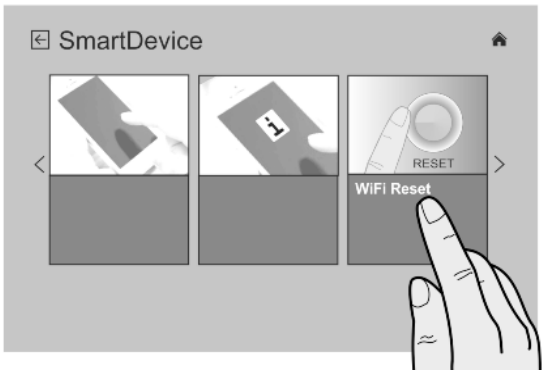

Fig. 57

Use this menu item to call up the sub menu to reset your**SmartDevice box** to the default settings.

▶ Press the **WIFI RESET** button.
▷ The submenu for resetting the WiFi settings appears.

Resetting the SmartDevice

EN

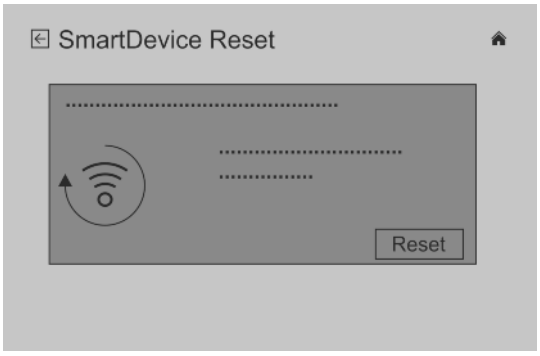

Fig. 58

In this menu item you can reset the WIFI settings of your **SmartDevice box** to the default setting.

▶ Press **RESET** to confirm.

▷ The **SmartDevice box** is reset to the default settings.

Showing the WiFi status on the Home screen

Status: WiFi on & connected

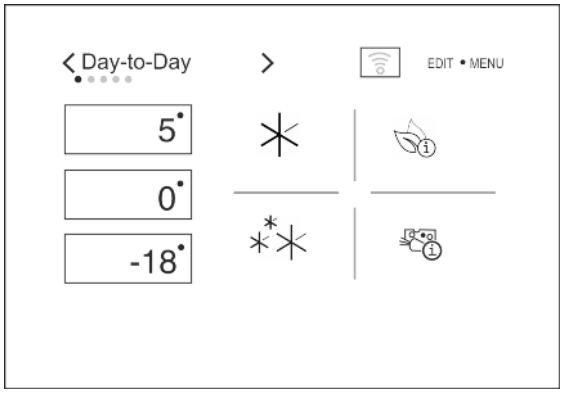

Fig. 59

▶ The **WiFi indicator** is white.

▷ WiFi is on.

▷ Your home network is connected to the Liebherr server.

Status: WiFi on & connecting

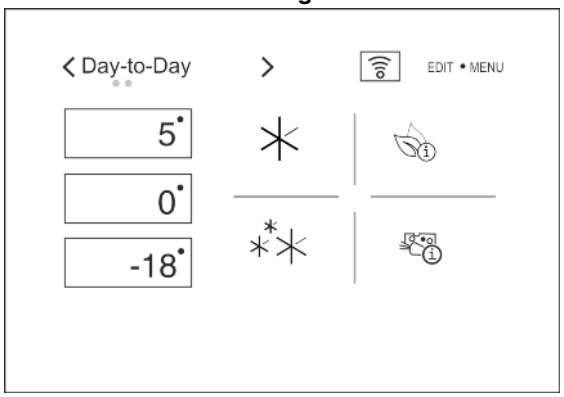

Fig. 60

▶ The **WiFi indicator** is red.

▷ WiFi is on.

▷ There is no connection to your home network and/or the Liebherr server.

Status: WiFi on & disconnected

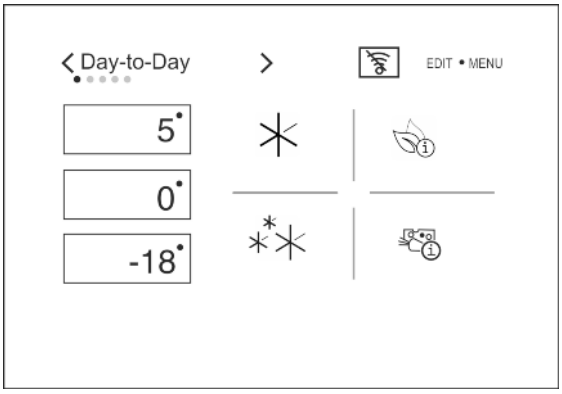

Fig. 61

▶ The **WiFi indicator** is crossed out.

▷ WiFi is on.

▷ The **SmartDevice box** is either not connected to a network or the **SmartDevice box** is connected to a network but the network cannot be found, e.g. switched off at night.

4.10 Inserting the FreshAir filter.

The supplied FreshAir filter guarantees optimum air quality. It should be changed every 12 months. When the reminder function is set, a message on the display prompts you to change it.

▶ Remove the fan cover.

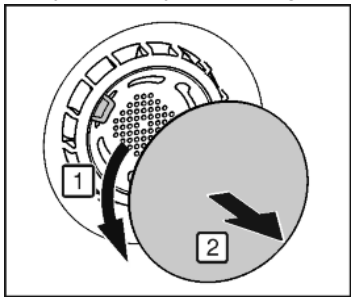

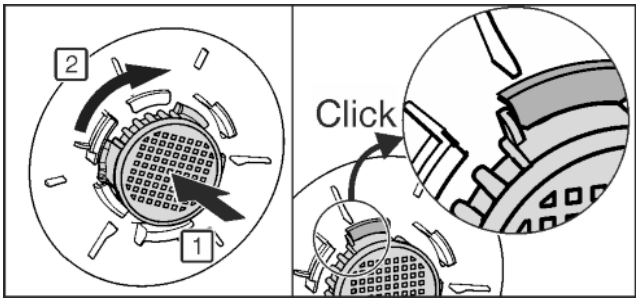

Fig. 62

▶ Place the FreshAir filter into the cover and turn to the right.

▶ Ensure that the filter clicks into place.

▶ Replace the fan cover again.

Switch on reminder function

▶ Press menu.

▶ Navigate to *System settings*: Press navigation arrows.

▶ Press *System Settings*.

▶ Navigate to *Appliance filter*: Press navigation arrows.

▶ Press *Appliance filter*.

▶ Press *FreshAir filter*.

▶ Press status button On/Off

▷ A message prompts you to change it once the reminder function has expired.

4.11 Activating the clean ventilation grill reminder function

The ventilation grill must be cleaned at least once a year for sufficient ventilation. When the reminder function is set, a message on the display prompts you to clean it.

▶ Press menu.

▶ Navigate to *System settings*: Press navigation arrows.

▶ Press *System Settings*.
▶ Navigate to *Appliance filter*: Press navigation arrows.
▶ Press *Appliance filter*.
▶ Press *Ventilation grill*.
▶ Press status button On/Off
▷ A message prompts you to clean it once the reminder function has expired.

5 Control

5.1 System settings

Basic settings can be made in *System settings*.
▶ Press menu.
▶ Navigate to *System settings*: Press navigation arrows.
▶ Press *System Settings*.
▶ Navigate to relevant system setting: Press navigation arrows.

The following system settings are listed:

- *Appliance filter*: (see 4 Putting into operation)
- *Appliance information*: (see 6 Maintenance)

5.1.1 Set language

The display language can be set in *Language*.
▶ Press *Language*.
▶ Display other languages: Press navigation arrows.
▶ Press selection indicator next to selected language.

5.1.2 Set date

The date format and date can be set in *Date*.
▶ Press *Date*.
▶ Choose date format: Press selection indicator next to selected date format.
▶ Set day, month and year: Press navigation arrows repeatedly or press and hold.
▶ Display or delete date on status screen: Press status button On/Off if required

5.1.3 Set time

Time and time display can be set in *Time*.
▶ Press *Time*.
▶ Choose time format: Press selection indicator next to selected time format.
▶ Set hours and minutes: Press navigation arrows repeatedly or press and hold.

5.1.4 Set temperature unit

The temperature unit of °C and °F can be set in *Temperature units*.
▶ Press *Temperature units*.
▶ Press selection indicator next to selected temperature unit.

5.1.5 Set screen brightness

Under *Display* you can set the brightness of the Status screen, the time until the Status screen darkens and you can have the screen switch off without opening the door after 24 hours.

If the screen switch off pre-set when it is delivered from the factory is switched off, the amount of energy use increases slightly.
▶ Press *Display*.
▶ Set the Status screen brightness from levels 1 to 5: Press navigation arrows.
▶ Set the time before the screen darkens, from 30 seconds to 10 minutes: Press navigation arrows.
▶ Enable/disable screen auto switch-off after 24 hours: Press status button On/Off if required.

5.1.6 Setting audible signals

Audible signals for the following situations can be selected or deselected under *Sound*:

Audible signal	Effect
Acoustic signal for alerts	Alert messages appearing during operation. These have no direct influence on the refrigerator's cooling function. An on-screen message is also displayed if there is a message.
Acoustic signal for reminders	Reminder about consumables which need to be replaced. These have no immediate effect on the cooling function. An on-screen message is also displayed if there is a message.
Acoustic signal for confirmations	Confirmation signal when changing options and functions.

▶ Press *Sound*.
▶ Switch acoustic signals on or off: Press status button On/Off

5.1.7 System reset

Settings can be reset to factory settings in *Reset*.
▶ Press *Reset*.
▶ Press *Reset*.
▷ Settings are reset to factory settings.
▷ The display switches to language setting.
▶ Repeat settings for initial operation. (see 4.8.1 Initial operation)

5.2 Timer

A timer can be activated on the status screen.

During the timer cycle time, all settings can be made.

5.2.1 Switching on the timer

▶ Press time on the status screen.
▷ Timer settings are displayed.

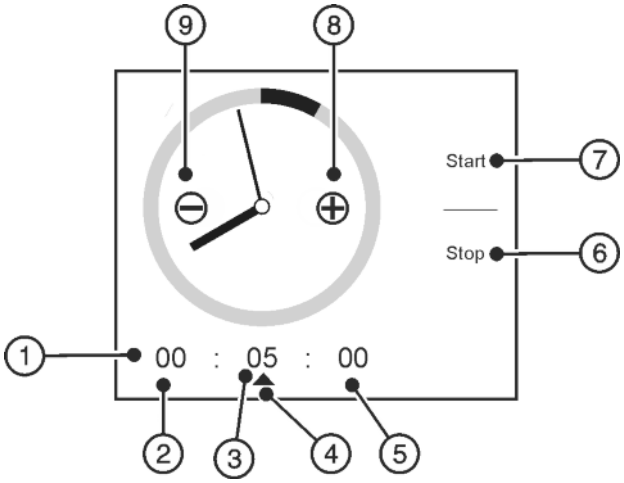

Fig. 63

(1) Timer cycle time
(2) Hours
(3) Minutes
(4) Selected time unit
(5) Seconds
(6) Stop
(7) Start
(8) Plus
(9) Minus

▶ Press on hours, minutes or seconds.
▶ Symbol ▲ designates selected time unit.
▶ Increase cycle time: Press plus.
▶ Reduce cycle time: Press minus.

▶ Change other time unit: Press on preferred time unit and change relevant cycle time with plus and minus.
▶ Press *Start*.
▷ Timer cycle time and *Stop* are displayed.

5.2.2 Switching Timer off ahead of schedule

▶ Press *Stop*.

5.2.3 Timer cycle time has expired

Timer alarm message appears on the screen.
▶ Press *OK*.

5.3 Programme

The appliance can be operated with 5 preset programmes. Each programme offers individual temperature and function settings for different requirements. Depending on the programme, different settings can be selected and options activated.

Options which can be activated are displayed on the Home screen. A preselection of options is displayed at every programme start. These options can be selected and deselected using the Edit command.

5.3.1 Change programme

The selected programme is displayed on the top left of the home screen.
▶ Change programme: Press navigation arrows.
▶ Press*Activate*.

5.3.2 *Day-to-Day programme*

The *Day-to-Day programme* is intended as a standard programme for everyday requirements. The set temperatures offer optimum refrigeration for individual temperature areas. Settings can be made individually. Changes in the *Day-to-Day programme* are saved so that they are not lost when changing programme. Time-limited options are not automatically started on programme restart.

Preset temperatures:
- Fridge compartment 5 °C
- Freezer compartment -18 °C
- BioFresh Plus 0 °C / 0 °C / 0 °C

Preselected options:
- *SuperCool*
- *SuperFrost*
- Energy saving tips
- Storage recommendations

Options selectable via Edit:
- *SabbathMode*
- *Night mode*
- *Bottle timer*
- *IceMaker*

5.3.3 *EnergySaver programme*

The *EnergySaver programme* is intended for lowering energy consumption. Higher temperatures are preset in all temperature zones as a result of which the appliance has to cool less. Changes to options are discarded after a programme change.

Preset temperatures:
- Fridge compartment 7 °C
- Freezer compartment -16 °C
- BioFresh Plus 0 °C / 0 °C / 0 °C

Preselected options:
- Energy saving tips
- Storage recommendations
- Display settings

The preselection includes all options which can be selected and deselected via the Edit command.

5.3.4 *MaxPerformance programme*

The *MaxPerformance programme* is intended for maximum refrigeration. It is specially designed for storing large amounts of food. The lowest temperatures are preset in all temperature areas. Changes to options are discarded after a programme change.

Preset temperatures:
- Fridge compartment 3 °C
- Freezer compartment -26 °C
- BioFresh Plus 0 °C / 0 °C / 0 °C

Preselected options:
- *SuperCool*
- *SuperFrost*

Options selectable via Edit:
- *IceMaker*
- *Bottle timer*

Activated options:
- *SuperCool*
- *SuperFrost*

On expiry of all time-limited options, the programme changes to the *Day-to-Day programme*.

5.3.5 *Party programme*

The *Party Programme* offers special options and settings before and during a party. For example, drinks can be cooled more quickly using the *BottleTimer*. The *PartyTimer* option can be used to select the programme cycle time and a connecting programme. The lowest temperatures are preset in all temperature areas. Changes to options are discarded after a programme change.

Preset temperatures:
- Fridge compartment 3 °C
- Freezer compartment -26 °C
- BioFresh Plus 0 °C / 0 °C / 0 °C

Preselected options:
- *Party timer*
- *Bottle timer*
- *IceMaker*
- *SuperCool*
- *SuperFrost*
- Storage recommendations

Options selectable via Edit:
- *Night mode*

*** Depending on model and options**

Activated options:
- *IceMaker*
- *SuperCool*
- *SuperFrost*

5.3.6 *Holiday programme*

The *Holiday programme* is intended for minimum energy consumption during an extended absence. Temperature in the fridge compartment is increased to 15 °C, this way saving energy and preventing bad smells and mould formation. The fridge compartment must be emptied completely during the programme duration. The set freezer temperature remains unchanged.

Preselected options:
- Energy saving tips
- *IceMaker*

The preselection includes all options which can be selected and deselected via the Edit command.

5.4 Options

General options not assigned to a specific programme can be set from the menu on the Home screen.

Programme-specific options can be selected in the relevant programme via the Edit command and displayed on the Home screen. A preselection of options is displayed at every programme start.

These options can be selected and deselected using the Edit command depending on the programme. An overview offers (see 5.3 Programme)

5.4.1 Selecting and deselecting options.

Note
Option selection includes a maximum of 6 options.
▶ Select up to 6 options at the same time.

▶ Press Edit.
▷ A list of programme-specific options is displayed.

○ The option is not displayed on the Home screen.

✓ The option is displayed on the Home screen.

▶ Call up more options: Press navigation arrows.
▶ Select or deselect option: Press selection indicator on the right next to the option.
▶ Save selection: Press Home or Back symbol.

Maximum number reached message displayed: More than 6 options have been selected.
▶ Press *OK*.
▷ Changes not made.
▷ The display switches to the home screen.
▶ Selecting and deselecting options again. Press Edit.

5.4.2 Child proofing

The child-proofing function enables you to make sure that the appliance is not inadvertently switched off by playing children.

Switching the child lock on and off

▶ Press menu.
▶ Navigate to the *child lock*: Press navigation arrows.
▶ Press *child lock*.
▶ Press status button On/Off

5.4.3 Sabbath Mode

This function meets the religious requirements on the Sabbath or Jewish feast days. When Sabbath mode is on some of the electronic control functions are switched off. After setting Sabbath mode you no longer need to worry about indicator lamps, figures, symbols, displays, alarm messages and fans. The thawing cycle only works for the specified time without taking account of fridge use. After a power cut the appliance automatically switches back to Sabbath mode.

There is a list of Star-K certified appliances at www.star-k.org/appliances.

WARNING
Danger of food poisoning.
If a power cut occurs when Sabbath mode is enabled, this message is not saved. Once the power is restored the appliance continues to work in Sabbath mode. When this mode is over no message about the power cut is displayed on the temperature display.
If a power cut occurred during Sabbath mode:
▶ Check the food for quality. Do not eat the food if it has thawed.

- All functions are blocked until Sabbath mode is switched off.
- If functions such as SuperFrost, SuperCool, ventilation etc. are selected when Sabbath mode is switched on they remain switched on.
- The IceMaker does not work.
- No audible signals are emitted and the temperature display does not indicate any warnings or settings (such as a temperature alarm or door alarm).
- The internal light is off.

Switching *SabbathMode* on.

▶ Press the *SabbathMode* symbol on the Home screen.

-or-
▶ Press menu.

▶ Navigate to *SabbathMode*: Press navigation arrows.
▶ Press *Activate*.
▷ The *SabbathMode* symbol is displayed on the screen.

▷ *SabbathMode* switches off automatically after 120 hours if it has not already been switched off manually. The display switches to the home screen.

Switch off the *SabbathMode*

▶ Press screen.
▶ Press *Stop*.
▷ The display switches to the home screen.

5.4.4 Energy saving tips

Practical information on reducing energy consumption can be retrieved in *Energy saving tips*.
▶ Press the *Energy saving tips* symbol on the Home screen.

-or-
▶ Press menu.

▶ Never gate to *Energy saving tips*: Press navigation arrows.
▶ Press *Energy saving tips*.
▶ Display more *Energy saving tips*: Press navigation arrows.

5.4.5 Storage recommendations

Practical information on storing food in the refrigerator compartment and BioFresh compartment can be called up in *Storage tips*.

EN

▶ Press the *Storage tips* symbol on the Home screen. 

-or-
▶ Press menu.

▶ Navigate to *Storage tips*: Press navigation arrows.
▶ Press *Storage tips*.
▷ Different food groups are displayed.
▶ Display more food groups: Press navigation arrows.
▶ Processed food group.
▷ Different foods are displayed.
▶ Display more food: Press navigation arrows.
▶ Press food.
▷ Tips on storage, vitamins and minerals are displayed.

5.4.6 *Night mode*

Time periods can be set with the *NightMode*, in which no acoustic alerts and reminders are triggered.

Switching on *NightMode*:
▶ Press the *NightMode* symbol on the Home screen. 

-or-
▶ Press menu.

▶ Navigate to *NightMode*: Press navigation arrows.
▶ Press *NightMode*.
▶ Set start and end time in hours and minutes: Press navigation arrows repeatedly or press and hold.
▶ Press status button On/Off
▷ *NightMode* is switched on, starts and ends daily at the selected time.

Switching off *NightMode*:
▶ Press the *NightMode* symbol on the Home screen. 

-or-
▶ Press menu.

▶ Navigate to *NightMode*: Press navigation arrows.
▶ Press *NightMode*.
▶ Press status button On/Off

5.4.7 *Party timer*

The *Party programme* cycle time and a subsequent programme can be defined, which should be changed when the *PartyTimer* expires, using the *PartyTimer* .

Switch on *PartyTimer* :
▶ Press the *PartyTimer* symbol on the Home screen. 

▶ Set the programme duration in 4 levels from 6 hours to 24 hours: Press navigation arrows.
▶ Select subsequent programme: Press navigation arrows.
▶ Press status button On/Off
▷ Cycle time is displayed on the Home screen on the symbol.

Switching *PartyTimer* **off ahead of schedule:**
▶ Press the *PartyTimer* symbol on the Home screen. 

▶ Press *Stop*.
▷ The display switches to the home screen.

5.4.8 SuperCool

With SuperCool you switch to the highest cooling performance to reach lower cooling temperatures. Use SuperCool, to rapidly cool large amounts of food. 

When SuperCool is activated, the fan* may run. The appliance operates with maximum cooling performance, which means that the noise of the refrigeration unit may be temporarily louder.

The SuperCool function uses slightly more energy.

Switching onSuperCool

▶ Press the *SuperCool* symbol on the Home screen. 

▶ Set the cycle time in 4 levels from 3 hours to 12 hours: Press navigation arrows.
▶ Press status button On/Off
▷ Temperature drops gradually.
▷ Cycle time is displayed on the Home screen on the symbol.
▷ The *SuperCool* symbol is displayed on the status screen.

After the preset cycle time, the appliance returns to normal mode. Temperature gradually changes to the previously set temperature.

SwitchingSuperCool off ahead of schedule



▶ Press the *SuperCool* symbol on the Home screen.
▶ Press *Stop*.
▶ The display switches to the home screen.
▷ Temperature gradually changes to the previously set temperature.

5.4.9 SuperFrost

With this function you can freeze fresh food quickly through to the core. The appliance operates with maximum refrigeration. The noise of the refrigeration unit may be temporarily louder as a result. 

You can freeze as many kilograms of fresh food within 24 hrs as is indicated on the type plate under “Freezing capacity ... kg/24hrs”. This maximum freezing quantity can vary depending on model and climate class.

You have to activate SuperFrost in good time, depending on how much fresh food is to be frozen: about 6 hours before placing the food inside in case of small amounts and about 24 hours in advance in case of the maximum amount of food to be frozen.

Wrap produce and spread it out as far as possible. Do not allow produce to be frozen to touch produce that is already frozen to prevent the latter thawing.

You do not have to activate SuperFrost in the following cases:

- when placing frozen food in the freezer
- when freezing up to approx. 2 kg fresh food daily

Switching SuperFrost on.

▶ Press the *SuperFrost* symbol on the Home screen. 

▶ Press status button On/Off
▷ Temperature drops gradually.
▷ The *SuperFrost* symbol is displayed on the status screen.

If there is a small amount of frozen food:
▶ wait about 6 hours.
▶ Appliance with NoFrost: Put packaged food into the top drawers.
▶ Appliance without NoFrost: Put packaged food into the bottom drawers.

With the maximum amount of frozen food (see model plate):
▶ wait about 24 hours.
▶ Appliance with NoFrost: Remove the top drawers and place the food directly on the top shelves.
▶ Appliance without NoFrost: Remove the bottom drawer and place the food directly in the appliance so that it is in contact with the floor or side walls.
▷ SuperFrost switches itself off automatically after about 65 hours. Temperature gradually changes to the previously set temperature.
▶ Put the food in the drawers and close them again.

SwitchingSuperFrost off ahead of schedule

▶ Press the *SuperFrost* symbol on the Home screen.

▶ Press status button On/Off

▷ Temperature gradually changes to the previously set temperature.

5.4.10 *Bottle timer*

Bottles can be cooled quickly in the freezer compartment with the *BottleTimer*. A message and audible signal prompt you to remove the drinks in time.

WARNING

Bottle and can storage time in freezer compartment too long!
Risk of injury from glass fragments.

▶ *BottleTimer alarm* message: Remove bottles and cans immediately.

Switching on *BottleTimer*:

▶ Press the *BottleTimer* symbol on the Home screen.

▶ Number of containers in 25 levels from 1 container to 25 containers: Press navigation arrows repeatedly or press and hold.

▶ Set total volume in 13 levels from 0.2 litre to 5 litres: Press navigation arrows repeatedly or press and hold.

▶ Press status button On/Off

▷ *BottleTimer* and *SuperFrost* are on.

▷ Temperature drops gradually.

▷ Cycle time is displayed on the Home screen with the *BottleTimer* symbol.

▷ The *SuperFrost* symbol is displayed on the status screen.

Remove bottles

The *BottleTimer alarm* message appears on the screen at the same time as an audible signal

▶ Removed drinks.

▶ Press *OK*.

▷ *BottleTimer* and *SuperFrost* are off.

▷ Display changes to the Home screen and the audible signal stops.

Switching *BottleTimer* **off ahead of schedule**

▶ Press the *BottleTimer* symbol on the Home screen.

▶ Press *Stop*.

▷ *BottleTimer* and *SuperFrost* are off.

▷ Display changes to the Home screen and the audible signal stops.

5.4.11 Set screen brightness

The brightness of the status screen and the time it remains lit can be set in *Display settings*.

Screen brightness can be set from the Home screen in the *EnergySaver programme*. The setting is made in system settings in other programmes, (see 5.1.5 Set screen brightness)

Setting screen brightness in the *EnergySaver programme*:

▶ Press the *Display settings* symbol on the Home screen.

▶ Setting option, (see 5.1.5 Set screen brightness)

5.5 Refrigerator compartment

The natural circulation of air in the refrigerator compartment results in zones differing in temperature. It is coldest directly above the plate separating off the BioFreshPlus zone and at the rear wall. It is warmest at the top front of the compartment and in the door.

5.5.1 Refrigerating food

Note

The energy consumption increases and the cooling performance decreases if the ventilation is inadequate.

▶ Always keep the air slits of the fan free.

▶ Place butter and preserves in the top area and in the door. (see 1 Appliance at a glance)

▶ Use reuseable plastic, metal, aluminium, glass containers and foil wrap to store food.

▶ Always store raw meat and fish in clean, sealed containers on the bottom shelf of the refrigerator, to prevent them coming into contact with or dripping onto other foods.

▶ Foods that easily absorb or give off smell or taste, as well as liquids, should be stored in sealed containers or covered.

▶ Use the front area of the base shelf only to temporarily set down refrigerated foods, for example while rearranging or sorting the contents. Remember not to leave refrigerated foods here as they could shift to the back or tip over when you close the door.

▶ Do not pack foods too closely together, as the air needs to circulate.

5.5.2 Setting the temperature

The temperature depends on the following factors:

- the frequency of opening the door
- how long the door is open for
- the room temperature of the installation location
- the type, temperature and quantity of the food

The temperature can be set from 9 °C to 3 °C.

Recommended temperature setting: 5 °C

▶ Press the Fridge compartment field on the Home screen.

▶ Display other values: Press navigation arrows if required.

▶ Press temperature value.

▷ The appliance is set to the displayed temperature.

5.5.3 Shelves

Moving or removing shelves

The shelves are prevented from being pulled out accidentally by pull out stops.

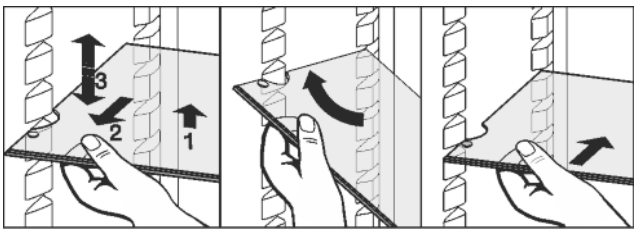

Fig. 64

▶ Lift the shelf and pull forward a little.

▶ Adjust the height of the shelf. To do this move the slots along the supports.

▶ In order to remove the shelf fully, place it at a slant and pull out towards the front.

▶ Re-insert shelves at the required height. The stops must face downwards and lie behind the front shelves.

When storing and removing food on the top shelf, please pay attention to the fold-out interior lighting.

EN

Dismantling shelves

▶ The shelves can be dismantled for cleaning.

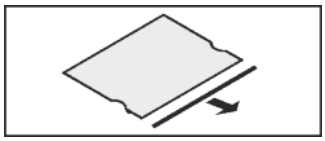

5.5.4 Using the sectioned shelf

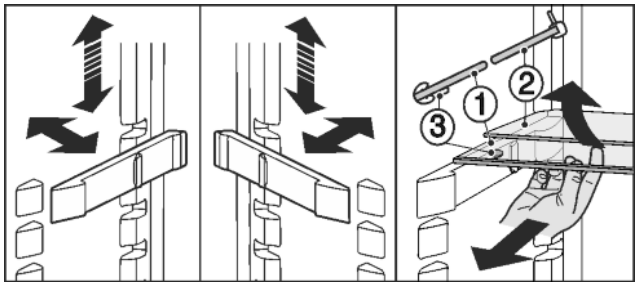

Fig. 65

Adjusting the height:

▶ Pull the glass plates out forwards one by one.
▶ Remove the support from the catch mechanism and click into place at the required height.

Using both shelves:

▶ Lift the top glass plate and pull the bottom glass plate forwards.
▷ The glass plate (1) with the pull out stops must be at the front so that the stops (3) point downward.

5.5.5 Using adjustable bottle shelf

At the base of the refrigerator compartment, the integrated bottle shelf or alternatively the glass shelf can be used:

▶ Using the bottle shelf: to save space, store the glass shelf under the bottle shelf.
▶ Place the bottles with the base pointing backwards facing the rear wall.

If the bottles project beyond the bottle shelf:

▶ set the lower door rack one position higher.

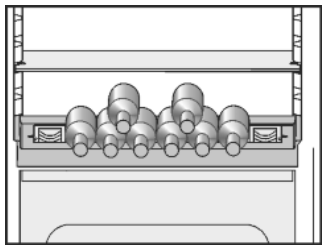

5.5.6 Door racks

Moving the storage rack

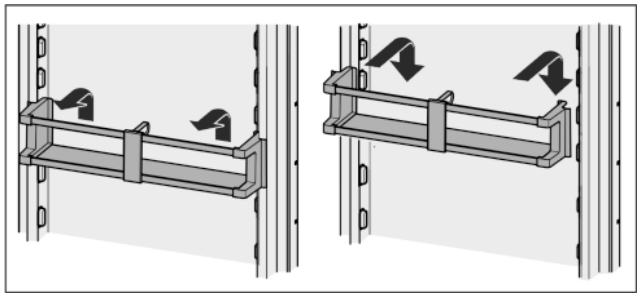

Fig. 66

The boxes can be removed and placed on the table as a single unit.

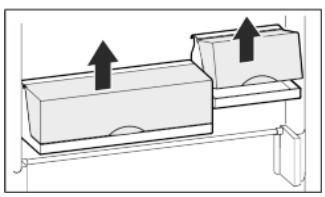

Either one or both the boxes can be used. If particularly tall bottles are to be stored, hang only a single box above the bottle rack.

▶ Re-positioning the boxes: Lift them for removal and reposition them as required.

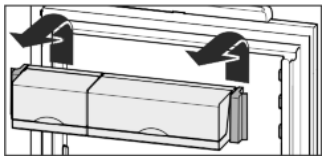

Note

Food items in the upper door area that are too tall can lead to contact with the interior lighting.

When closing the door, take care to ensure

▶ that the lid of the package rack is closed, or
▶ that when food is stored on the upper door rack a distance of 30 mm to the appliance ceiling is maintained.

Dismantling door racks

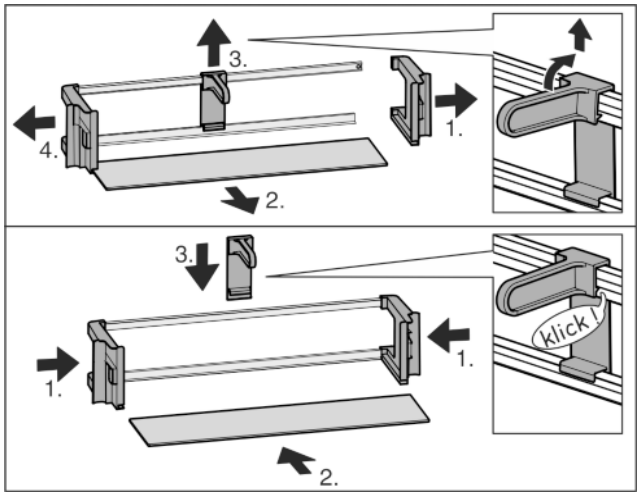

Fig. 67

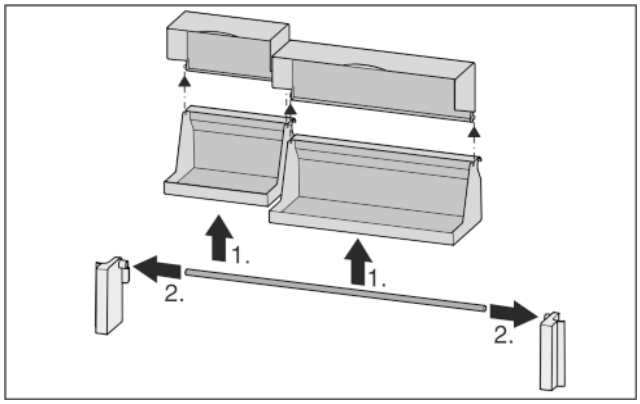

Fig. 68

▶ The door racks can be dismantled for cleaning.

5.5.7 Using the bottle holder

▶ To avoid the bottles tipping over, push the bottle holder along.

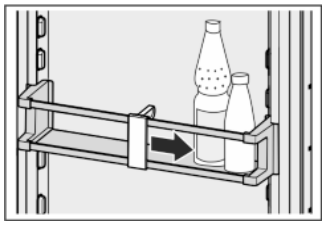

5.5.8 Butter dish

Opening/closing the butter dish

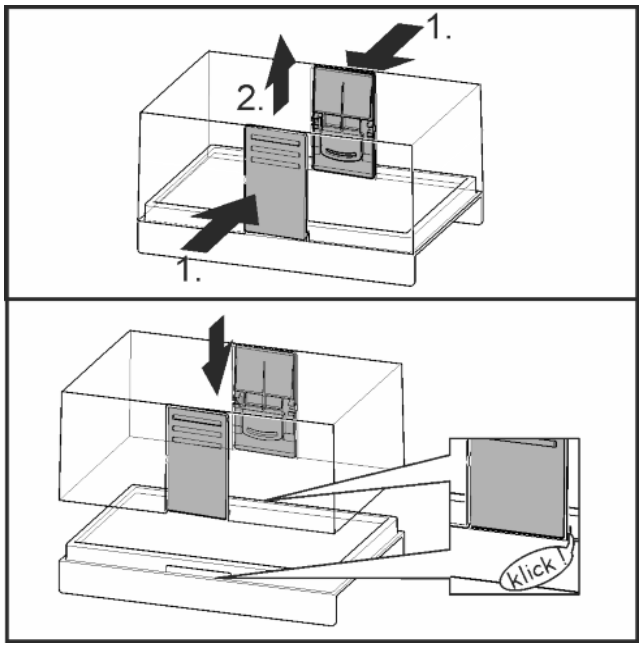

Fig. 69

Dismantling the butter dish

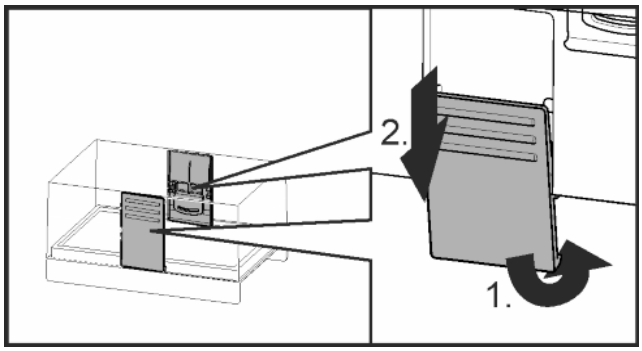

Fig. 70

▶ You can take the butter dish apart for cleaning.

5.5.9 Egg tray

You can take out and rotate the egg tray. You can use the two parts of the egg tray to mark different use-by dates, for example.

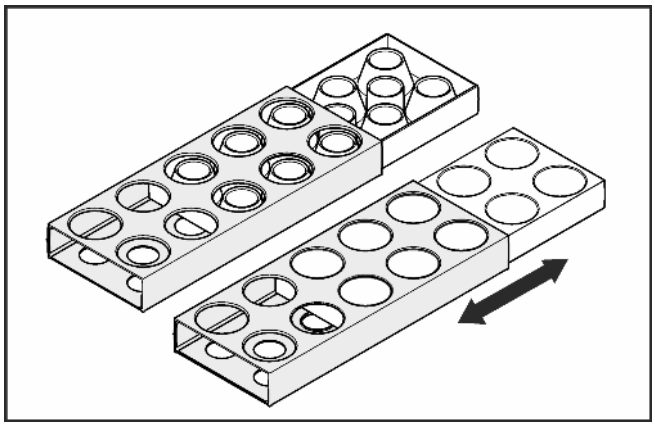

▶ Use the top part to store e.g. chicken eggs.
▶ Use the bottom part to store quails' eggs.

5.6 BioFresh compartment

In the BioFresh section, certain fresh foods can be kept fresh for longer compared to conventional cooling methods.

The BioFresh section is divided into different zones.

The top BioFresh Plus compartment can go down to -2 °C making it particularly suited to fresh seafood and fish. This can be divided into two zones, so the right and left zones of the compartment can be set at different temperatures. An internal fish & seafood compartment lets you split the temperatures.

The zone below is a normal BioFresh area.

A moisture regulating plate lets you adjust the moisture for the refrigerated food.

Compartments without a moisture regulating plate (DrySafe) are suitable for dry or packaged foodstuffs. Compartments with a moisture regulating plate (HydroSafe) are suitable for unpacked foodstuffs with high moisture content or for dry or packaged foodstuffs, depending on the setting.

The following sections give more details on this.

For food with an indicated best before date, the date specified on the packaging always applies.

If the temperature falls below 0 °C, foodstuffs can freeze.

EN

5.6.1 Fruit & Vegetable safe

The humidity in the Fruit & Vegetable safe depends on the moisture content of the items being stored and the number of times the door is opened. You can set the humidity yourself.

On the high moisture setting, the Fruit & Vegetable safe is suitable for storing loose salad, vegetables and fruit with a high moisture content. A well-stocked drawer is stored in absolute freshness.

On the dry setting the compartment is suitable for storing dry or packaged food (e.g. dairy products, meat, sausages). Here a relatively dry storage climate is set.

5.6.2 Setting the moisture level in the Fruit & Vegetable safe

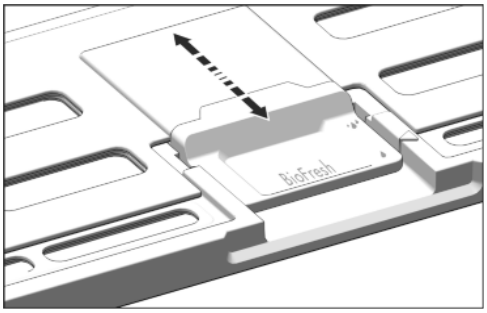

Fig. 71

You can choose any moisture setting for the Fruit & Vegetable safe.

▶ Low humidity: Slide the slide bar backwards.
▷ The openings in the cover are partially or fully open. The moisture levels drop in the Fruit & Vegetable safe.

▶ High humidity: Slide the slide bar forwards.
▷ The openings in the cover are partially or fully closed. The moisture levels rise in the Fruit & Vegetable safe.

5.6.3 BioFreshPlus compartment (adjustable)

Depending on the setting, the adjustable BioFresh Plus compartment is ideal for storing fresh seafood, fish at -2 °Cor fruit and vegetables at 0 °C. The settings are as follows: 0 °C I 0 °C, 0 °C I -2 °C, -2 °C I -2 °C.

5.6.4 Storing food

Note

▶ Do not put the following in the BioFresh section: cold-sensitive vegetables including cucumbers, aubergines, tomatoes, courgettes and any cold-sensitive tropical fruits.

▶ To prevent food spoilage due to transfer of germs: Store unwrapped animal and vegetable products separate from one another in the drawers. This also applies to different sorts of meat.
If food has to be stored together due to lack of space:
▶ wrap the food.
▶ Storing high-moisture content foods: shake off the moisture beforehand.
If there is too much moisture in the compartment:
▶ select the low moisture setting.
-or-
▶ Remove any excess moisture with a cloth.

5.6.5 Storage times

Guidelines for storage periods at low humidity 0 °C			
Butter	up to	90	days
Hard cheese	up to	110	days
Milk	up to	12	days
Cold meats	up to	9	days
Poultry	up to	6	days
Pork	up to	7	days
Beef	up to	7	days
Game	up to	7	days

Note
▶ Please note that protein-rich food deteriorates faster, i.e. shellfish and crustaceans deteriorate faster than fish, fish faster than meat.

Guidelines for storage periods at high humidity 0 °C			
Vegetables, salads			
Artichokes	up to	14	days
Celery	up to	28	days
Cauliflower	up to	21	days
Broccoli	up to	13	days
Chicory	up to	27	days
Leaf lettuce	up to	19	days
Peas	up to	14	days
Kale	up to	14	days
Carrots	up to	80	days
Garlic	up to	160	days
Cabbage	up to	55	days
Round lettuce	up to	13	days
Herbs	up to	13	days
Leeks	up to	29	days
Mushrooms	up to	7	days
Radishes	up to	10	days
Sprouts	up to	20	days
Asparagus	up to	18	days
Spinach	up to	13	days
Savoy cabbage	up to	20	days
Fruit			
Apricots	up to	13	days

Guidelines for storage periods at high humidity 0 °C			
Apples	up to	80	days
Pears	up to	55	days
Blackberries	up to	3	days
Dates	up to	180	days
Strawberries	up to	7	days
Figs	up to	7	days
Blueberries	up to	9	days
Raspberries	up to	3	days
Red currants	up to	7	days
Cherries, sweet	up to	14	days
Kiwis	up to	80	days
Peaches	up to	13	days
Plums	up to	20	days
Cranberries	up to	60	days
Rhubarb	up to	13	days
Gooseberries	up to	13	days
Grapes	up to	29	days

Additional guidelines for BioFresh Plus storage periods for –2 °C				
Seafood				
Crabs	for -2 °C	up to	4	days
Mussels	for -2 °C	up to	6	days
Sushi	for -2 °C	up to	4	days
Fish	for -2 °C	up to	4	days

5.6.6 Setting the temperature in the BioFresh Plus section.

The temperature depends on the following factors:
- the amount of times the door is opened
- the room temperature of the installation site
- the type, temperature and amount of food

The BioFresh Plus compartment can be split into two sections and the temperature set in the BioFresh Plus field. The settings are as follows: 0 °C I 0 °C, 0 °C I -2 °C, -2 °C I -2 °C. This does not change the BioFresh temperature.

Settings for fish and seafood: -2 °C Select .

Setting as a BioFresh compartment: 0 °C Select .

CAUTION
Sickness!
Poor ventilation spoils food.
▶ Insert the BioFresh Plus drawer at the top. This compartment is labelled "BioFresh Plus Safe".
▶ At temperatures 0 °C I -2 °C Use the Fish & Seafood compartment on the right of the BioFresh Plus drawer.

▶ Press the BioFresh Plus field on the Home screen.
▶ Press temperature value.
▷ The appliance is set to the displayed temperature.

5.6.7 Adjusting the temperature in the BioFresh compartment

Recommended refrigerator setting: 5 °C. The BioFresh temperature is controlled automatically and is between 0 °C and 3 °C.

The temperature can be set slightly colder or slightly warmer. It can be set from level 1 (coldest temperature) to level 9 (warmest temperature). The default setting is level 5. With levels 1 - 4 the temperature may drop below 0 °C so that the food can freeze.

▶ Press menu.
▶ Navigate to *Adjusting BioFresh temperature*: Press navigation arrows if required.
▶ Press *Adjusting BioFresh temperature*:
▶ Set BioFresh temperature in 9 levels from level 1 to 9: Press navigation arrows.
▷ The temperature slowly changes to the new value.

5.6.8 Drawers with cushioners

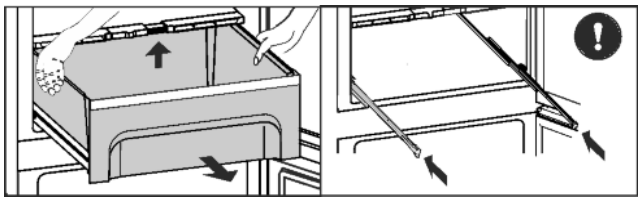

Fig. 72

▶ Pull out the drawer, lift it at the back and draw it forwards for removal.
▶ Push the rails in again!

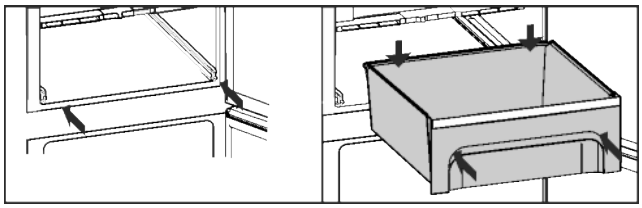

Fig. 73

▶ Push the rails in.
To position the BioFresh Plus compartment above the BioFresh compartment:
▶ Line up the drawer and slide it in until you hear a click at the back.

5.6.9 Fruit & Vegetable safe cover

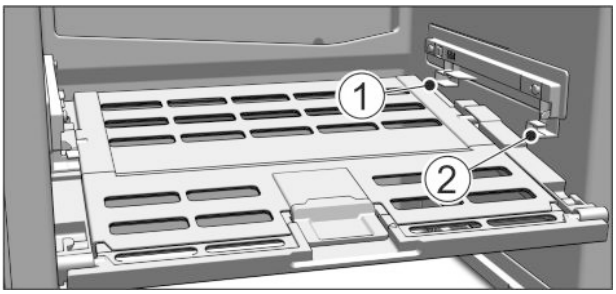

Fig. 74

▶ Removing the Fruit & Vegetable safe cover: After pulling out the drawers, carefully pull the cover towards you and down.
▶ Replacing the Fruit & Vegetable safe cover: Guide the ridges on the cover into the rear brackets *Fig. 74 (1)* and click it into the front bracket *Fig. 74 (2)*.

5.6.10 Using the FlexSystem

The FlexSystem helps you store and organise your food in a clear and flexible way. It lets you clearly divide your food into fruit, vegetables or by use-by dates, for example.

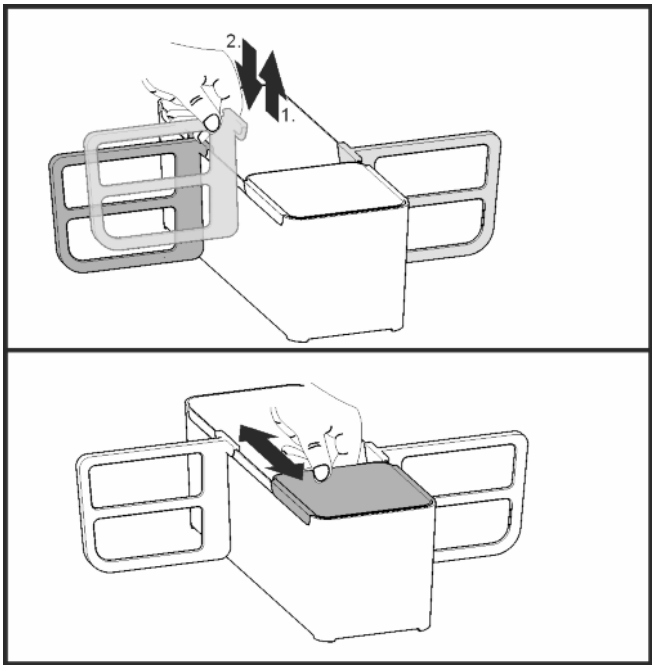

Fig. 75

▶ You can take the FlexSystem apart for cleaning.

5.6.11 Using the Fish & Seafood compartment

The Fish & Seafood compartment lets you set different temperatures in the BioFresh Plus compartment. You can store a small amount of fresh food such as fish and seafood separately in the Fish & Seafood compartment at the ideal temperature, such as -2 °C. You can set the rest of the BioFresh Plus compartment to cool at 0 °C or -2 °C.

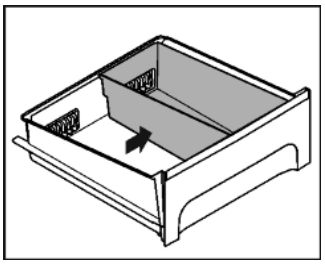

Fig. 76

▶ Use the Fish & Seafood compartment on the outer right side of the BioFresh Plus compartment to ensure your food is cooled at the right temperature.

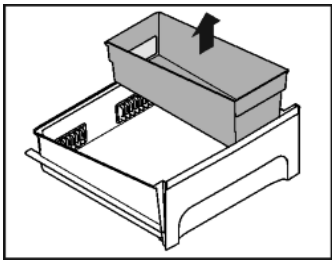

Fig. 77

▶ To remove the BioFresh Plus compartment, pull it all the way out and pull the Fish & Seafood compartment straight up and out.

5.7 Freezer compartment

You can store frozen food, make ice cubes and freeze fresh food in the freezer compartment.

EN

5.7.1 Freezing food

The rating plate indicates the maximum quantity of fresh food you can freeze within 24 hours (see 1 Appliance at a glance) under “Freezing capacity ... kg/24h”.

Each drawer can hold a max. of 25 kg of frozen food.

The shelves can each be loaded with 35 kg of frozen food.

Closing the door creates a vacuum. After closing, wait for around 1 minute, then the door will be easier to open.

CAUTION
Risk of injury from glass fragments.
Drink bottles and cans may explode if frozen. This applies particularly to carbonated drinks.
▶ Only freeze drink bottles and cans when using the *bottle timer* function.

So that the food is rapidly frozen through to the core, do not exceed the following quantities per pack

- Fruit, vegetables up to 1 kg
- Meat up to 2.5 kg

▶ Pack the food in portions in freezer bags, reusable plastic, metal or aluminium containers

5.7.2 Storage life

Standard values for the storage life of various types of food in the freezer compartment:	
Ice-cream	2 to 6 months
Sausage, ham	2 to 6 months
Bread, bakery products	2 to 6 months
Game, pork	6 to 10 months
Fatty fish	2 to 6 months
Lean fish	6 to 12 months
Cheese	2 to 6 months
Poultry, beef	6 to 12 months
Vegetables, fruit	6 to 12 months

The values indicated for storage life are standard ones.

5.7.3 Thawing food

- in the refrigerator compartment
- in a microwave oven
- in a conventional or fan oven
- at room temperature

▶ Remove only as much food as is required. Use thawed food as quickly as possible.
▶ Food once thawed should be re-frozen only in exceptional cases.

5.7.4 Setting the temperature

The temperature depends on the following factors:

- the amount of times the door is opened
- how long the door is open for
- the room temperature of the installation site
- the type, temperature and amount of food

The temperature can be set from -26 °C to -16 °C.

Recommended temperature setting: -18 °C
▶ Press the Freezer compartment field on the Home screen.
▶ Display other values: Press navigation arrows if required.
▶ Press temperature value.
▷ The appliance is set to the displayed temperature.

5.7.5 Drawers

Note
The energy consumption increases and the cooling performance reduces if the air ventilation is insufficient.
▶ Ensure that the air slits of the fan on the rear wall are always kept free!

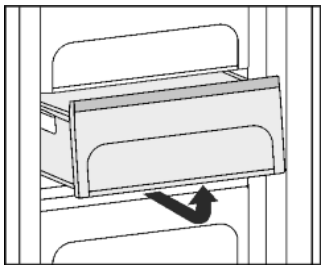

▶ To store frozen food directly on the shelves pull the drawer forward and lift it out.

5.7.6 Shelves

Moving shelves

▶ To remove the shelf: lift up at the front and pull out.
▶ To put the shelf back: simply push in as far as it will go.

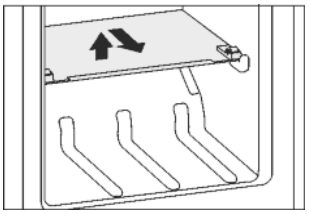

Removing shelves

▶ The shelves may be removed for cleaning.

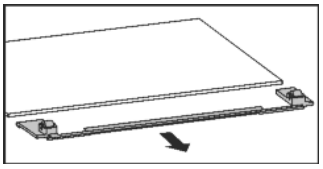

5.7.7 VarioSpace

You can remove the shelves and drawers. This leaves more room for larger food items such as poultry, meat, large game and tall baked goods, which can be frozen whole before further preparation.

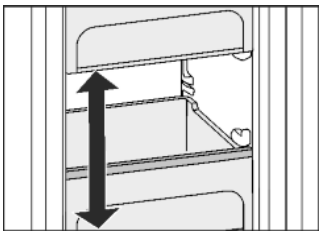

▶ Each drawer can hold max. 25 kg of frozen food.
▶ The shelves can each be loaded with 35 kg of frozen food.

5.7.8 Freezer pack

Freezer packs prevent the temperature rising too quickly should there be a power cut.

Using freezer packs

▶ Put the fully frozen freezer packs on the frozen food in the top front section of the freezer compartment.

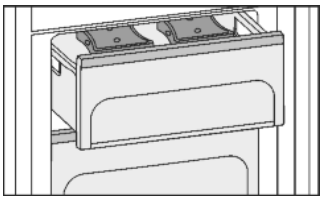

5.7.9 IceMaker

The IceMaker is located in the top drawer of the freezer on the left-hand side.

Make certain that the following conditions are met:
- The appliance is level.
- The appliance is connected.
- The freezer compartment is switched on.
- The IceMaker is connected to the water supply.

Producing ice cubes

The production capacity depends on the freezer temperature. The lower the temperature, the more ice cubes can be produced in a specific period.

The ice cubes drop from the IceMaker into the drawer. When a certain filling level has been reached, no further ice cubes are produced. The IceMaker does not fill the drawer right up to the brim.

Distribute the ice cubes evenly in the drawer to increase the capacity.

If large quantities of ice cubes are needed, the complete IceMaker drawer can be exchanged for the adjacent drawer. When the drawer is closed, the IceMaker automatically recommences production.

Once the IceMaker has been switched on for the first time, it may take up to 24 hours until the first ice cubes are produced.

Note
When the appliance is used for the first time and if it has been out of use for a long time, particles may collect in the IceMaker and/or water conduit.
▶ Do not use or consume ice cubes that have been made 24 hours after the first ice cubes are made.

Switch the IceMaker on.

▶ Press the *IceMaker* symbol on the Home screen.



-or-
▶ Press Menu.

▶ To get to *IceMaker*: Press navigation arrows.
▶ Press *IceMaker*.
▶ Press *IceMaker*.
▶ Press status button On/Off
▷ The IceMaker is switched on.

Note
▶ The IceMaker only makes ice cubes when the drawer is completely closed.

FlushClean:

Flushing function to rinse out the water pipe when used for the first time.

Note
The water pipe can only be rinsed out if the temperature is above 0 °C.
▶ Only use the *FlushClean* option if the temperatures in the appliance are above 0 °C.

NOTICE
Blocked IceMaker and water outlet.
Risk of damage to the IceMaker and the drawer outlet.
▶ Put containers with a maximum height of 12 cm in the drawer under the IceMaker.

Ensure that the IceMaker drawer is empty.
▶ Do not place containers taller than 12 cm in the drawer under the IceMaker.
▶ Press the *IceMaker* symbol on the Home screen.



-or-
▶ Press Menu.

▶ To get to *IceMaker*: Press navigation arrows.
▶ Press *IceMaker*.
▶ To get to *FlushClean*: Press navigation arrows.
▶ Press *FlushClean*.



▶ Press *Activate*.
▶ Do not operate the screen.
▷ Water pipes are rinsed and at the same time the ice cube tray is turned back to the cleaning position.



Flushing function terminated: The symbol appears.



▶ Remove the drawer and the container.
▶ Clean the drawer and, if necessary, remove excess water from the drawer.

IceMaker holiday function

The IceMaker holiday function is suitable for short phases when no ice cubes are to be made, for example, when you are on holiday.

Switching the IceMaker holiday function on.

The IceMaker drawer must be emptied and pushed in.
▶ Press the *IceMaker* symbol on the Home screen.



-or-
▶ Press Menu.

▶ Navigate to the *IceMaker*: Press the navigation arrows.
▶ Press *IceMaker*.
▶ Press *IceMaker-HolidayMode*.
▶ Press *Activate*.
▷ The ice cube tray moves to the cleaning position. The IceMaker switches to holiday function.
▷ The *IceMaker-HolidayMode* symbol is displayed on the Home screen



▶ Remove the drawer.
▶ Clean the ice cube tray and drawer with a soft cleaning cloth and warm water. If necessary use a mild detergent. Then rinse out.
▶ Push the drawer in.

Switching the IceMaker holiday function off

NOTICE
Sickness caused by dirty ice compartment.
▶ After the IceMaker has been switched off for a long time, clean the ice cube tray.

NOTICE
Rinse agent residue in the ice compartment and drawer.
Nausea or irritation of the mucous membrane.
▶ Remove rinse agent residue: Discard the first three batches of ice cubes.

▶ Remove the drawer.
▶ Clean the ice cube tray and drawer with a soft cleaning cloth and warm water. If necessary use a mild detergent. Then rinse out.
▶ Push the drawer in.
▶ Press the *IceMaker-HolidayMode* symbol on the Home screen.



-or-
▶ Press Menu.

▶ Navigate to the *IceMaker*: Press the navigation arrows.
▶ Press *IceMaker*.
▶ Press *IceMaker-HolidayMode*.
▶ Press *Stop*.
▷ The ice cube tray moves to the operating position. The IceMaker switches on.



EN

Switching off the IceMaker

If no ice cubes are required, the IceMaker can be switched off independently of the freezer compartment.

When the IceMaker is switched off, the drawer of the IceMaker can also be used for freezing and storing food.

▶ Cleaning the IceMaker (see 6.5 Cleaning the IceMaker) .
▶ Press the *IceMaker* symbol on the Home screen.

-or-

▶ Press Menu.

▶ Navigate to the *IceMaker*: Press the navigation arrows.
▶ Press *IceMaker*.
▶ Press *IceMaker*.
▶ Press status button On/Off
▷ The IceMaker is switched off.
▶ If necessary, food can now be frozen in the drawer up to a maximum height of 7 cm.

6 Maintenance

6.1 Change the FreshAir filter.

The FreshAir filter guarantees optimum air quality. It should be changed every 12 months. When the reminder function is set, a message on the display prompts you to change it. The FreshAir filter can be ordered from the specialist dealer.

Changing the filter

Replace the FreshAir filter! message is displayed.

▶ Remove the fan cover.

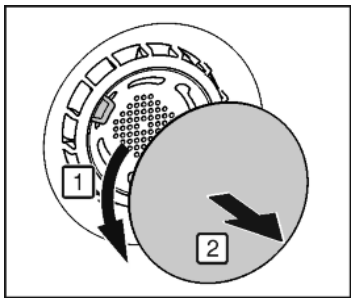

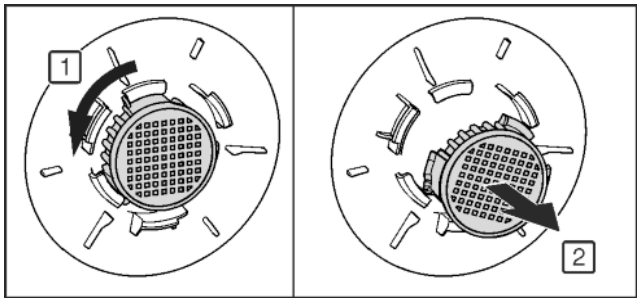

Fig. 78

▶ Remove the FreshAir filter.
▶ Insert the new filter in the reverse order.
▶ Ensure that the filter clicks into place.
▶ Replace the fan cover again.
▶ Press *OK*.
▷ *FreshAir filter replaced* message is displayed.
▶ Press *OK*.
▷ The display switches to the home screen.

Changing the filter later

If a reminder is needed to change the filter at a later date, the filter change can be put back 30 days.
Replace the FreshAir filter! message is displayed.

▶ Press *Remind me later*.
▷ The message will be displayed again in 30 days.
▶ Display message again if required: Press the ⚠ symbol on the Home screen.
▶ Navigate to the message if required: Press *OK*.

Switching off the reminder function

If a new FreshAir filter is not inserted, the reminder function can be turned off

▶ Press menu.
▶ Navigate to *System settings*: Press navigation arrows.
▶ Press *System Settings*.
▶ Navigate to *Appliance filter*: Press navigation arrows.
▶ Press *Appliance filter*.
▶ Press *FreshAir filter*.
▶ Press status button On/Off

6.2 Defrosting with NoFrost

The NoFrost system automatically defrosts the appliance.

Refrigerator compartment:

The defrost water evaporates due to the compressor heat.

Freezer compartment:

The moisture condenses on the evaporator, is periodically defrosted and evaporates.

▶ The appliance does not have to be manually defrosted.

6.3 Cleaning the ventilation grid

The ventilation grid ensures that the appliance works properly due to optimum aeration and ventilation.

▶ Clean the ventilation grid regularly with a vacuum cleaner.
▶ Remove stubborn stains with a soft cloth.

When the reminder function is set, an annual message on the display prompts you to clean it.

Cleaning the ventilation grid

The *Clean the ventilation grill!* message is displayed.

▶ Clean ventilation grid.
▶ Press *OK*.
▷ The *Ventilation grill cleaned* message is displayed.
▶ Press *OK*.
▷ The display switches to the home screen.

Clean the ventilation grid later

If a reminder is needed to change the ventilation grill at a later date, the filter change can be put back 30 days.
The *Clean the ventilation grill!* message is displayed.

▶ Press *Remind me later*.
▷ The message will be displayed again in 30 days.
▶ Display message again if required: Press the ⚠ symbol on the Home screen.
▶ Navigate to the message if required: Press *OK*.

Switching off the reminder function

If a reminder to clean the ventilation grill at a later date is no longer needed, the reminder function can be cancelled.

▶ Press menu.
▶ Navigate to *System settings*: Press navigation arrows.
▶ Press *System Settings*.
▶ Navigate to *Appliance filter*: Press navigation arrows.
▶ Press *Appliance filter*.
▶ Press *ventilation grill*.
▶ Press status button On/Off

6.4 Cleaning the appliance

Clean the appliance regularly.

WARNING
Risk of injury and damage as a result of hot steam!
Hot steam can lead to burns and can damage the surfaces.
▶ Do not use any steam cleaners!

NOTICE
Incorrect cleaning damages the appliance!
▶ Do not use cleaning agents in concentrated form.
▶ Do not use any scouring or abrasive sponges or steel wool.
▶ Do not use any sharp or abrasive cleaning agents, nor any that contain sand, chloride or acid.
▶ Do not use chemical solvents.
▶ Do not damage or remove the type plate on the inside of the appliance. It is important for the customer service.
▶ Do not pull off, bend or damage cables or other components.
▶ Do not allow any cleaning water to enter the drain channel, ventilation grille or electrical parts.
▶ Please use soft cleaning cloths and a universal pH-neutral cleaning agent.
▶ Please use cleaning and care products suitable for contact with foodstuffs in the appliance interior.

▶ **Empty appliance.**
▶ **Pull out the power plug.**



▶ Clean **plastic outer and inner surfaces** with lukewarm water and a little washing-up liquid.

NOTICE
Risk of damage from stainless steel care products!
The **stainless steel doors** and **stainless steel side panels** are treated with a premium surface finish.



Stainless steel care products attack these surfaces.
▶ Only use a soft, clean cloth to wipe down **finished door and side panel surfaces** and **painted door and side panel surfaces**. To remove heavy dirt, use a little water or neutral detergent. Alternatively, you can use a micro-fibre cloth.

▶ Most of the **parts** can be dismantled for cleaning: see the relevant chapter.
▶ **Clean drawers** by hand with lukewarm water and a little washing up liquid.
▶ Clean the **Fruit & Vegetable safe cover** by hand using lukewarm water and a small amount of detergent.
▶ All the **other fittings** can be put in the dishwasher.
▶ Only use a damp cloth to clean the **telescopic rails**. The grease in the runners is for lubrication purposes and must not be removed.

After cleaning:
▶ Wipe dry the appliance and items of equipment.
▶ Connect the appliance and switch it on again.
▶ Switch on SuperFrost (see 5.4.9 SuperFrost) .
When the temperature is sufficiently cold:
▶ Put the food back inside.

6.5 Cleaning the IceMaker

The IceMaker drawer must be emptied and pushed in. The IceMaker must be switched on.

▶ Press the *IceMaker* symbol on the Home screen.



-or-
▶ Press Menu.
▶ Navigate to the *IceMaker*. Press the navigation arrows.
▶ Press *IceMaker*.
▶ Press *TwistClean*.
▶ Press *Activate*.



▷ The ice cube tray moves to the cleaning position. The screen cannot be used during this process.
The rotary movement stops and the IceMaker switches off for cleaning.
▶ Remove the drawer.
▶ Clean the ice cube tray and drawer with a soft cleaning cloth and warm water. If necessary use a mild detergent. Then rinse out.
▶ Push the drawer in.
▶ Press *Stop*.
▷ The ice cube tray moves to the operating position.

NOTICE
Rinse agent residue in the ice compartment and drawer.
Nausea or irritation of the mucous membrane.
▶ Remove rinse agent residue: Discard the first three batches of ice cubes.

▶ Leave the IceMaker switched on.
-or-
▶ Switch the IceMaker off. (see 5.7.9.4 Switching off the IceMaker)

6.6 Customer service

First of all check whether you can eliminate the fault yourself (see 7 Malfunctions) . If you can't, contact Customer Services. You can find the address in the enclosed customer service list.

WARNING
Risk of injury if repair work is not carried out professionally!
▶ Have any repairs and action - not expressly specified - on the appliance and mains cable carried out by service personnel only. (see 6 Maintenance)

Displaying the appliance description (model and index), service no. (service) and serial no. (S. no.) on the screen:
▶ Press menu.
▶ Navigate to *System settings*: Press navigation arrows.
▶ Press *System Settings*.
▶ Navigate to *appliance information*: Press navigation arrows.
▶ Press *Appliance information*.
▷ The appliance information is displayed.
▶ Note down the appliance information.
▶ Contact customer service and give them the required appliance information.
▶ Follow any further instructions given by Customer Services.

Alternatively you can read off the appliance information from the model plate:
▶ Read off the appliance name *Fig. 79 (1)*, service no. *Fig. 79 (2)* and serial no. *Fig. 79 (3)* from the model plate. The model plate can be found on the inside of the appliance on the left.

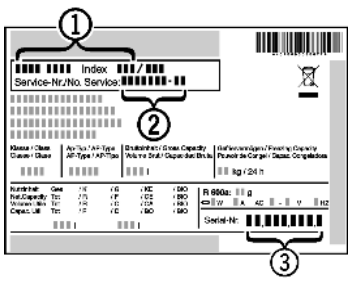

Fig. 79

Customer menu
The following functions can be called up in the customer menu:
- **Self diagnostics**
The device carries out self diagnostics and checks all electrical components.
- **RESET**

EN

The appliance is reset to the factory settings.
- **Manual defrosting**
  Manual defrosting is started.
- **Water supply time**
  This function is active for appliances with an ice cube maker. The size of the ice cubes is determined by the water supply time.

Proceed as follows to access the **customer menu**:
▶ Press *appliance information*.
▶ Tap service access.
▶ Enter the numerical code **151** to select the **customer menu**.

7 Malfunctions

Your appliance is designed and manufactured for a long life span and reliable operation. If a malfunction nonetheless occurs during operation, check whether it is due to a handling error. In this case you will have to be charged for the costs incurred, even during the warranty period. You may be able to rectify the following faults yourself:

Appliance does not work.
→ The appliance is not switched on.
▶ Switch on the appliance.
→ The power plug is not properly inserted in the wall socket.
▶ Check power plug.
→ The fuse of the wall socket is not in order.
▶ Check fuse.
→ The appliance plug does not fit the appliance properly.
▶ Check the appliance plug.
→ The appliance has not been used for longer than 24 hours. The screen has switched off.
▶ Open the door.

The compressor runs for a long time.
→ The compressor switches to a low speed when little cold is needed. Although the running time is increased as a result, energy is saved.
▶ This is normal in energy-saving models.
→ SuperFrost is activated.
▶ The compressor runs for longer in order to rapidly cool the food. This is normal.
→ SuperCool is activated.
▶ The compressor runs for longer in order to rapidly cool the food. This is normal.

Excessive noise.
→ Due to the various speed steps, speed-regulated* compressors can generate different running noises.
▶ The sound is normal.

A bubbling and gurgling noise.
→ This noise comes from the refrigerant flowing in the refrigeration circuit.
▶ The sound is normal.

A quiet clicking noise.
→ The noise is produced whenever the refrigeration unit (motor) automatically switches on or off.
▶ The sound is normal.

A hum. It is briefly a little louder when the refrigeration unit (the motor) switches on.
→ The refrigeration increases automatically when the SuperFrost, function is activated, fresh food has just been placed in the appliance or the door has been left open for a while.
▶ The sound is normal.
→ The refrigeration increases automatically when the SuperCool function is activated, fresh food has just been placed in the appliance or the door has been left open for a while.
▶ The sound is normal.
→ The ambient temperature is too high.
▶ Solution: (see 1.2 Appliance range of use)

A low hum.
→ The sound is produced by air flow noise of the fan.
▶ The sound is normal.

Vibration noises
→ The appliance is not standing firmly on the floor. As a result objects and adjacent units start to vibrate when the refrigerator is running.
▶ Align the appliance using the adjustable feet.
▶ Keep bottles and jars apart.

Flow sound at the soft stop mechanism.
→ The noise is produced when the door is opened and closed.
▶ The sound is normal.

The *Demo mode active!* message appears on the screen with the time elapsing.
→ Demo mode is enabled.
▶ Press *Stop*.

DEMO appears in the bottom right corner of the screen.
→ Demo mode is enabled.
▶ Unplug the appliance.
▶ Plug the appliance in again.

The outer surfaces of the appliance are warm*.
→ The heat of the refrigeration circuit is used to prevent condensate from forming.
▶ This is normal.

The IceMaker cannot be switched on.
→ The appliance and therefore the IceMaker are not connected.
▶ Connect the appliance to the mains (see 4 Putting into operation) .

The IceMaker does not make any ice cubes.
→ The IceMaker is not switched on.
▶ Switch on the IceMaker.
→ The drawer of the IceMaker is not properly closed.
▶ Close the drawer properly.
→ The water connection is not open.
▶ Open the water connection.

Functions in the IceMaker submenu do not start.
→ Ice cube tray rotates.
▶ Try again after 1 minute.

The temperature is not cold enough.
→ The door of the appliance is not properly closed.
▶ Close the door of the appliance.
→ Insufficient ventilation.
▶ Keep ventilation grille clear, and clean it.
→ The ambient temperature is too high.
▶ Solution: (see 1.2 Appliance range of use) .
→ The appliance was opened too frequently or for too long.
▶ Wait to see whether the appliance reaches the required temperature by itself. If not, please contact the after sales service (see 6 Maintenance) .
→ Too much fresh food was placed inside without SuperFrost.
▶ Solution: (see 5.4.9 SuperFrost)
→ The temperature is incorrectly set.
▶ Set the temperature to a colder setting and check after 24 hours.
→ The appliance is too close to a source of heat (stove, heater etc).
▶ Change the position of the appliance or the source of heat.

The internal light does not come on.
→ The appliance is not switched on.

* Depending on model and options

▶ Switch the appliance on.
→ The door was open for longer than 15 minutes.
▶ The internal light switches itself off automatically after about 15 minutes if the door is open.
→ The appliance has not been used for more than 24 hours. As a result, the screen and illumination switched off.
▶ Open the door and wait a few moments.
→ The LED illumination is faulty or the cover is damaged:

WARNING
Risk of injury due to electric shock!
There are live electrical parts under the cover.
▶ Only ever have the inside LED light replaced or repaired by customer service or trained personnel.

WARNING
Risk of injury from LED bulb!
The light intensity of the LED light corresponds to hazard group RG 2.
If the cover is defective:
▶ Do not look directly into the light from close range. It cause injury to the eyes.

The door seal is defective or needs to be replaced for another reason.
→ The door seal can be replaced. It can be replaced without the need for special tools.
▶ Contact Customer Service (see 6 Maintenance) :

The unit has iced up or condensation has formed.
→ The door seal may have also slipped out of its groove.
▶ Check to ensure that the door seal is seated properly in the groove.

8 Messages

Error messages and reminders are displayed by an audible signal and a message on the screen. The audible signal gets louder and louder when error messages appear. It only stops when the message is confirmed. Highest priority messages are displayed first if several occur at the same time. Each message must be cleared separately.

The message stays on the Home screen as long as it is active or the fault is not eliminated.

Note
Details on the message can be displayed again on the Home screen.
▶ Press messages symbol ⚠.

For several active messages, the navigation bar states the number and the current position in the messages.

To display the next message, press *OK*.

After the last active message the display switches to the home screen.

Door alarm
An audible warning sounds if the door is open for longer than 60 seconds. The *Door alarm* appears on the display. The audible warning stops automatically when the door is closed.

The audible warning can be switched off when the door is open. The audible alarm is switched off while the door is open.
▶ Press *OK*.
▷ The audible signal stops.
▷ The display switches to the home screen.

Temperature alarm
An audible signal sounds if the temperature in the freezer compartment is not cold enough. The *Temperature alarm* message appears on the display.

The temperature had risen too high during the last few hours or days. When the fault is eliminated the appliance continues to work at the last temperature setting.

The reason for too high a temperature may be:
- hot, fresh food was inserted
- too much warm room air flowed in when rearranging and removing food
- the power was cut off for a while
- the appliance is faulty

▶ Press *OK*.
▷ The audible signal stops.
▷ The display switches to the home screen.
▷ The temperature alarm symbol is displayed in the relevant temperature field.
▶ Check the food for quality. Do not consume spoiled food. Do not re-freeze defrosted food,
▷ The symbol is greyed out when the target temperature is reached.

If the alarm status persists or the temperature cannot be reset independently: (see 7 Malfunctions) .

Power cut
An audible warning sounds. The *Power failure alarm* message appears on the display. The warmest temperature reached in the freezer compartment during the power cut is displayed on the screen.

The temperature had risen too high over the last few hours or days due to a power cut or power interruption.

When the power has been restored, the appliance continues to work in the last temperature setting in the *Day-to-Day programme*. Activated reminders for changing the FreshAir filter and cleaning the ventilation grid are retained. If the *Holiday programme* was active before the power failure, the appliance continues in the *Holiday programme*.
▶ Press *OK*.
▷ The audible signal stops.
▷ The display switches to the home screen.
▷ The temperature alarm symbol is displayed in the relevant temperature field.
▶ Check the food for quality. Do not consume spoiled food. Do not re-freeze defrosted food,
▷ The symbol is greyed out when the target temperature is reached.

Appliance faults
An audible warning sounds. The *Fault* message appears on the display with the relevant error code.

An appliance component indicates a fault.

▶ Note down the fault code.
▶ Press *OK*.
▷ The audible signal stops.
▷ The display switches to the home screen.
▶ Contact Customer Services (see 6 Maintenance) .

If the fault related to a specific temperature zone, the appliance fault symbol is displayed instead of the temperature in the zone's temperature field.

Water inlet fault
An audible warning sounds. The *Fault* message appears in the display with the WATER error code.

WATER

The water connection to the IceMaker is not open, the water feed is interrupted or the filter in the water inlet hose connection is blocked.

EN

▶ Press *OK*.
▷ The audible signal stops.
▷ The display switches to the home screen.
▶ Open the water connection.

-or-

▶ Check the water connection and the hoses (see 4 Putting into operation) .

-or-

▶ Clean the filter.

▶ Switch the IceMaker on (see 5.7.9.2 Switch the IceMaker on.) .
▶ Contact Customer Service if the message persists (see 6 Maintenance) .

Other messages



Replace FreshAir filter. (see 6 Maintenance)



Clean the ventilation grill. (see 6 Maintenance)



BottleTimer alarm (see 5 Control)



Timer alarm (see 5 Control)



Open, close IceMaker drawer

9 Decommissioning

9.1 Switching the appliance off

Note
If the appliance or the freezer or fridge compartment cannot be switched off the child safety device has been switched on.
▶ Switch the child safety device off (see 5.4.2 Child proofing) .

9.1.1 Switching the whole appliance off via the menu

The whole appliance is switched off. The screen goes black.
▶ Press menu.
▶ Navigate to *Switching off the appliance*: Press navigation arrows.
▶ Press *Switch off the appliance*.
▶ Press *Switch off*.
▶ Press *Switch off*.
▷ The standby symbol flashes on the whole screen.
▷ After 1 minute the standby symbol goes out.

9.1.2 Switching the whole appliance off via the freezer compartment

When the freezer compartment is switched off the refrigerator and BioFresh Plus compartment is also turned off automatically. The screen remains on, so the time can still be used, for example.
▶ Press freezer compartment field.
▶ Press standby symbol.
▷ *Switch off zone?* is displayed.
▶ Press *OK*.

9.1.3 Switching off the fridge and BioFresh Plus compartments

If necessary, the fridge and BioFresh Plus compartments can be switched off separately.
▶ Press the refrigerator compartment of BioFresh plus field.
▶ Press standby symbol.
▷ *Switch off zone?* is displayed.
▶ Press *OK*.

9.2 Taking the appliance out of service

▶ Empty the appliance.
▶ Put the IceMaker in the cleaning position (see 6 Maintenance) .
▶ Switch off the appliance (see 9 Decommissioning) .
▶ Remove mains connector.



▶ Remove appliance connector if required: Remove and move from left to right at the same time.
▶ Clean the appliance (see 6.4 Cleaning the appliance) .
▶ Leave the door open to prevent odour.

10 Disposing of the appliance



The appliance contains some reusable materials and should be disposed of properly - not simply with unsorted household refuse. Appliances which are no longer needed must be disposed of in a professional and appropriate way, in accordance with the current local regulations and laws.

When disposing of the appliance, ensure that the refrigeration circuit is not damaged to prevent uncontrolled escape of the refrigerant it contains (data on type plate) and oil.
▶ Disable the appliance.
▶ Pull out the plug.
▶ Cut through the connecting cable.

Liebherr-Hausgeräte Ochsenhausen GmbH
Memminger Straße 77-79
88416 Ochsenhausen
Deutschland

home.liebherr.com