EN

DETAILED INSTRUCTIONS
FOR USE OF WASHING MACHINE

gorenje

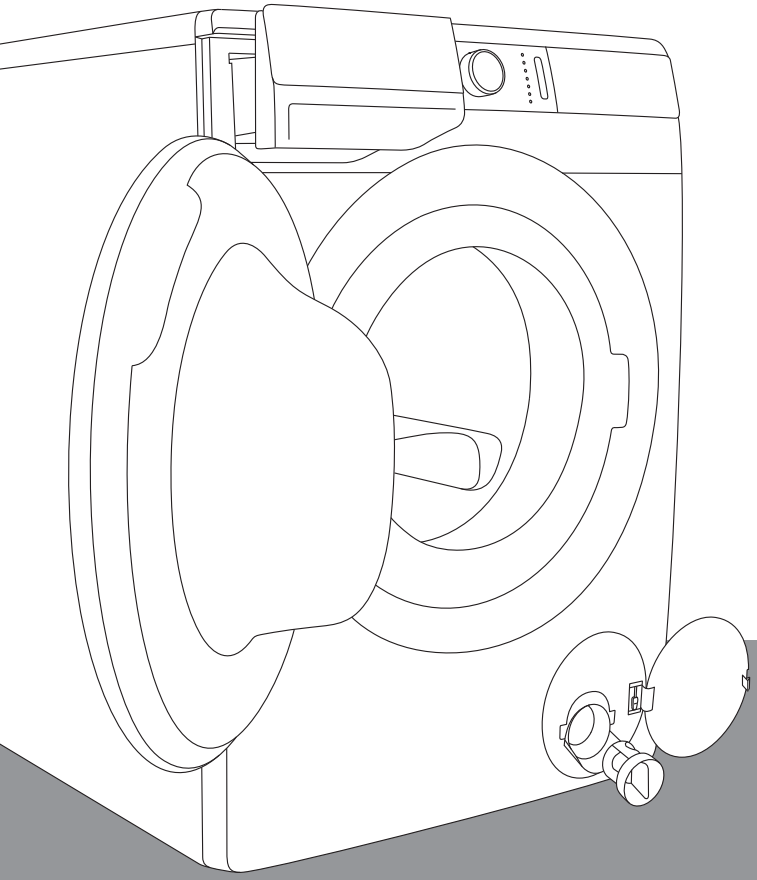

www.gorenje.com

Life is complicated today. Let's make laundry care simple! Your new **WaveActive** washing machine uses innovative technology and latest achievements in laundry care to help you simplify your daily household chores. **WaveActive** technology offers the gentlest care for any garment, with minimum creasing. At the same time, your washing machine will be easy on the environment, owing to its highly efficient use of power, water and detergent.

This washing machine is intended solely for household use. Please do not use it for any laundry labelled as not suitable for machine washing.

The following symbols are used throughout the manual and they have the following meanings:

 Information, advice, tip, or recommendation

 Warning – general danger

 Warning – danger of electric shock

 Warning – danger of hot surface

 Warning – danger of fire



It is important that you carefully read the instructions.

CONTENTS

4	**SAFETY PRECAUTIONS**	**INTRODUCTION**
10	**WASHING MACHINE DESCRIPTION**	
11	Technical specifications	
12	Control unit	
14	**INSTALLATION AND CONNECTION**	**PREPARING THE WASHING MACHINE BEFORE FIRST USE**
14	Removing the blocking rods	
15	Moving and transport after installation	
16	Selecting the room	
16	Adjusting the washing machine feet	
17	Washing machine placement	
19	Connecting to water supply	
21	Aqua - stop	
21	Total aqua - stop	
22	Connecting and securing the water discharge hose	
24	Connecting the appliance to the power mains	
25	**BEFORE USING THE APPLIANCE FOR THE FIRST TIME**	
26	**WASHING PROCESS, STEP BY STEP (1–7)**	**STEPS OF THE WASHING PROCESS**
26	Step 1: Heed the labels on the laundry	
27	Step 2: Preparing the washing process	
30	Step 3: Choosing the washing programme	
34	Step 4: Choosing the settings	
40	Step 5: Selecting additional functions	
44	Step 6: Starting the washing programme	
45	Step 7: Change of washing programme or manual (physical) cancellation	
46	Step 8: End of the washing programme	
47	**INTERRUPTIONS AND CHANGING THE PROGRAMME**	
51	**MAINTENANCE & CLEANING**	**WASHING MACHINE CLEANING AND MAINTENANCE**
51	Cleaning the dispenser tray	
52	Cleaning the water supply hose, detergent dispenser housing, and rubber door gasket	
53	Cleaning the pump filter	
54	Cleaning the washing machine exterior	
55	**TROUBLESHOOTING**	**TROUBLE-SHOOTING**
55	What to do ...?	
56	Troubleshooting and error table	
60	Servicing	
61	**RECOMMENDATIONS FOR WASHING AND ECONOMIC USE YOUR WASHING MACHINE**	**MISCELLANE-OUS**
64	Stain removal tips	
66	**DISPOSAL**	
67	**PROGRAM DURATION AND SPINNING RATE TABLE**	
69	**TYPICAL CONSUMPTION TABLE**	

SAFETY PRECAUTIONS



Carefully read the instructions for use before using the washing machine.

Please, do not use the washing machine without reading and understanding these instructions or use first.

These instructions for use of a washing machine are supplied with different types or models of washing machines. Therefore, they may include descriptions of settings or equipment that are not available in your washing machine.

Failure to observe the instructions for use or inappropriate use of the washing machine may result in damage to the laundry or the appliance, or injury to the user. Keep the instruction manual handy, near the washing machine.

Instructions for use are available on our website at www.gorenje.com.

Your washing machine is intended solely for household use. If the washing machine is used for professional, for-profit purpose or purpose exceeding normal use in a household, or if the washing machine is used by a person who is not a consumer, the warranty period shall be equal to the shortest warranty period required by relevant legislation.

Follow the instructions for correct installation of the Gorenje washing machine and connection to the water and power mains (see chapter »INSTALLATION AND CONNECTION«).

Connection to water and power supply has to be executed by an adequately trained technician or expert.

Any repair and maintenance pertaining to safety or performance should be done by trained experts.

To avoid danger, **a damaged power** cord may only be replaced by the manufacturer, a service technician, or an authorized person.

Before connecting the washing machine to the power mains, wait for at least 2 hours until it reaches room temperature.

In case of a defect, only use approved spare parts by authorized manufacturers.

In case of incorrect washing machine connection, incorrect use, or servicing by an unauthorized person, the user shall bear the cost of any damage as such damage shall not be covered by warranty.

The washing machine may not be connected to the power mains using an extension cord.

Do not connect the washing machine to power mains using an external switching device such as a programme timer, or connect it to power mains that is regularly switched on and off by the power supply provider.

Do not connect the washing machine to an electrical outlet intended for an electric shaver or hair dryer.

Do not install the washing machine in a room where the temperature can drop to below 5°C, as washing machine parts may be damaged in case of water freezing.

Place the washing machine on a level and stable solid (concrete) base.

If the washing machine is placed on an elevated stable base, the washing machine has to be additionally secured against tipping.

Before the first use of the washing machine, remove the blocking rods, as switching on a blocked washing machine can result in serious damage (see chapter »INSTALLATION AND CONNECTION/Removing the blocking rods«). Warranty shall be void in cases of such damage.

To connect the washing machine to water supply, make sure to use the supplied water supply hose and gaskets. Water pressure has to be between 0.05 and 0.8 MPa (0.5 – 8 bar).

Always use a new water supply hose to connect the washing machine to water supply; do not reuse an old water supply hose.

The end of the water discharge hose should reach into a water drain line.

Before the start of the washing cycle, press the door on the

indicated spot until it locks into place. The door cannot be opened during washing machine operation.

We recommend removing any impurities from the washing machine drum before the first wash using the Cotton 90°C programme (see PROGRAMME TABLE).

After the washing cycle, close the water tap and pull out the washing machine plug from the power socket.

Clean the pump filter whenever the symbol appears on the display unit.

Only use the washing machine for washing laundry, as described in the instruction manual. The machine is not intended for dry cleaning.

Only use agents for machine washing and care of laundry. We shall not be responsible for any damages or discolouration of gaskets and plastic parts resulting from incorrect use of bleaching or colouring agents.

When descaling, only use descaling agents with added anti-corrosion protection. (Only use non-corrosive descaling agents.) Follow the manufacturer's instructions. Finish the descaling process with several rinse cycles or by running the Steril tub (Self-cleaning programme) in order to remove any residual acid (e.g. vinegar etc.).

⚠ Do not use detergents that contain solvents as this could lead to release of poisonous gases, damage to the washing machine, and risk of fire and explosion.

679870

No silver ions are released during the washing programme.

The washing machine is not intended for use by persons (including children) with physical or mental impairments, or persons with lacking experience and knowledge. These persons should be instructed about the use of the washing machine by a person responsible for their safety.

The warranty does not cover consumables, minor deviations in colour, increased noise that results from appliance age and which does not affect the functionality of the appliance, and aesthetic defects on components, which do not affect the functionality and safety of the appliance.

CHILD SAFETY
Before closing the washing machine door and running the programme, make sure there is nothing except laundry in the drum (e.g. if a child climbed into the washing machine drum and closed the door from the inside).

Keep the detergent and conditioner out of reach of children.

Activate the child lock. See chapter »CHOOSING THE SETTINGS/Child lock«.

Do not let children younger than three years come near the appliance, unless they are under constant supervision.

The washing machine is made in compliance with all relevant safety standards.
This washing machine may be used by children aged 8 years and above and by persons with reduced physical,

sensory or mental capabilities or lack of experience and knowledge, but only if they are supervised during the use of the washing machine, if they have been provided relevant instructions regarding safe use of the washing machine, and if they understand the hazards of inappropriate use. Make sure children do not play with the appliance. Children may not clean the washing machine or perform any maintenance tasks without supervision.

DANGER OF HOT SURFACE

At higher washing temperatures, the door glass will heat up. Be careful to avoid burns. Make sure children do not play near the door glass.

WATER OVERFLOW PROTECTION (WITH WASHING MACHINE SWITCHED ON)

If the water level in the appliance rises above normal level, then the excess water level protection will be activated. It will shut off the water supply and start pumping out the water. The program is interrupted and an error is reported (see TROUBLESHOOTING TABLE).

TRANSPORT/TRANSPORT AFTER INSTALLATION

If you intend to move the washing machine after it has been installed, then it should be blocked by inserting at least one blocking rod (see chapter »INSTALLATION AND CONNECTION/Moving and transport«). Before inserting the blocking rods, disconnect the washing machine from the power mains!

WASHING MACHINE DESCRIPTION

FRONT

1 Control unit
2 Start/pause button
3 Programme selector knob
4 On/off/reset button
5 Dispenser tray
6 Door
7 Rating plate
8 Pump filter

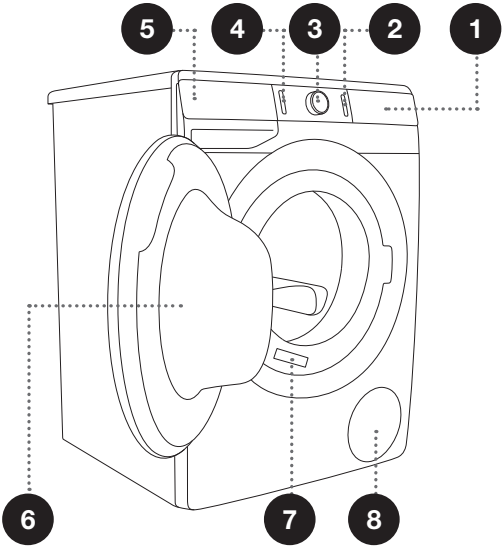

BACK

1 Water supply hose
2 Power cord
3 Water discharge hose
4 Adjustable feet

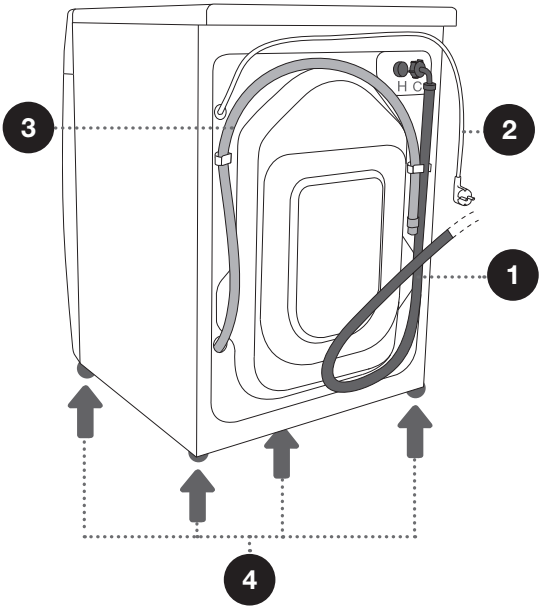

TECHNICAL SPECIFICATIONS

(DEPENDING ON THE MODEL)

Rating plate with basic information about the washing machine is fitted on the front wall of the washing machine door opening (see chapter »WASHING MACHINE DESCRIPTION«).

Maximum load	See rating plate			
Width	600 mm	600 mm	600 mm	600 mm
Height	850 mm	850 mm	850 mm	850 mm
Washing machine depth (a)	430 mm	465 mm	545 mm	610 mm
Depth with door closed	462 mm	495 mm	577 mm	640 mm
Depth with door open (b)	947 mm	980 mm	1062 mm	1125 mm
Washing machine weight	X kg (depending on the model)			
Rated Voltage	See rating plate			
Nominal power	See rating plate			
Connection	See rating plate			
Water pressure	See rating plate			
Current	See rating plate			
Frequency	See rating plate			

Rating plate

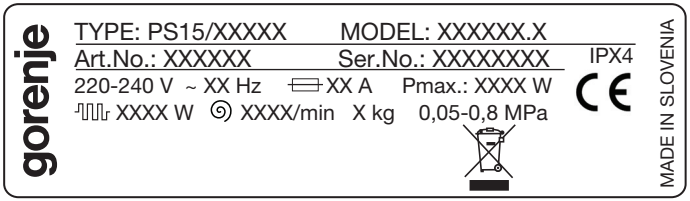

CONTROL UNIT

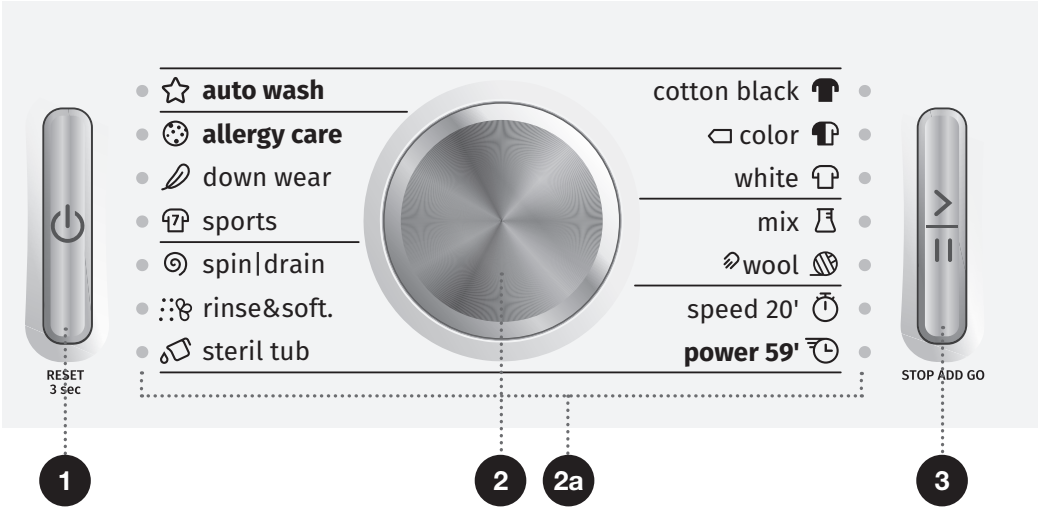

1 ON/OFF/RESET BUTTON

Use this button to turn the washing machine on and off, and to reset the washing programme.

The button is lit when the washing machine is switched on.

2 PROGRAMME SELECTOR KNOB

2a Light next to the selected washing programme is lit.

3 START/PAUSE BUTTON

Use this button to start or pause a programme.

Upon start-up or during pause, the button backlight will flash; when the programme is started and in progress, it will be lit continuously.

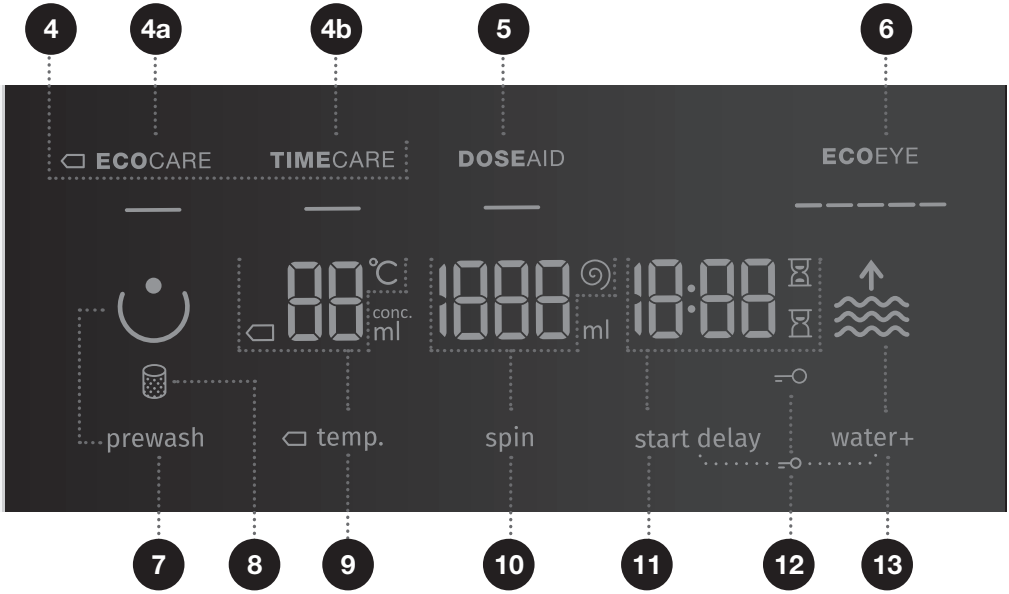

4 **WASHING MODE**

4a **ECO**CARE
4b **TIME**CARE

5 **DOSE**AID
Information on recommended amount of powder and liquid detergent, according to the selected settings and the amount of laundry in the drum.

6 **ECO**EYE
Information on water and power consumption, according to the selected washing settings.

7 **PREWASH**

8 **CLEAN THE PUMP FILTER** symbol lighting

9 **TEMP.** (WASHING TEMPERATURE)
Temperature settings options

10 **SPIN** (SPINNING RATE /DRAIN /PUMP STOP)
Option to set the spinning rate

11 **START DELAY**
Option to set a start delay

12 **CHILD LOCK** symbol lighting
Press the positions 11+13 and hold them for 3 seconds.

13 **WATER+** (HIGH WATER LEVEL)
Option to set the higher water level (2 levels)

679870

INSTALLATION AND CONNECTION

Remove all packaging. When removing the packaging, make sure not to damage the appliance with a sharp object.

REMOVING THE BLOCKING RODS

⚠ Before the first use of the appliance, transport rods must be removed. A blocked washing machine may be damaged when it is switched on for the first time. Warranty shall be void in cases of such damage!

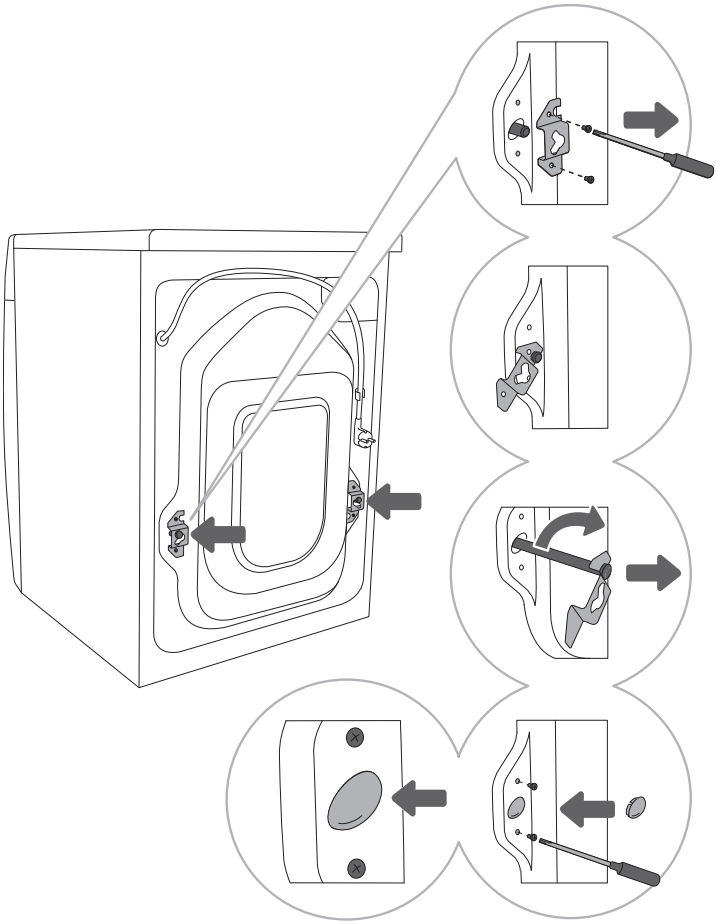

1 Move the hoses and undo the screws on the back of the washing machine. Remove the two angular pieces.

2 Slide the angular pieces onto the grove in the blocking rod; before doing so, rotate the right angular piece to the opposite side.

3 Use the angular pieces to rotate the blocking rods by 90°and pull them out.

4 Cover the two holes through which the blocking rods were inserted with plastic plugs, and redo the screws that you undid in step 1. The plastic plugs are supplied in the bag with the washing machine instruction manual.

MOVING AND TRANSPORT AFTER INSTALLATION

If you wish to move the washing machine after it has been installed, the angular pieces and at least one blocking rods have to be re-installed to prevent vibration damage to the washing machine during transport (see chapter »INSTALLATION AND CONNECTION/Removing the blocking rods«). If you lost the angular pieces and the blocking rods, they can be ordered from the manufacturer.

⚠ After transport, the washing machine should be left to stand still for at least two hours before it is connected to the power mains, so that it can reach room temperature. The appliance should be installed and connected by a trained technician.

⚠ Carefully read the instructions for use before connecting the washing machine. Repair or any warranty claim resulting from incorrect connection or use of the washing machine shall not be covered by the warranty.

SELECTING THE ROOM

Floor on which the washing machine is placed must have a concrete base. It should be clean and dry; otherwise, the washing machine may slide. Also, clean the bottom surface of adjustable feet.

The washing machine must stand level and stable on a solid base.

ADJUSTING THE WASHING MACHINE FEET

Use a water scale and spanner No. 32 (for feet) and 17 (for the nut).

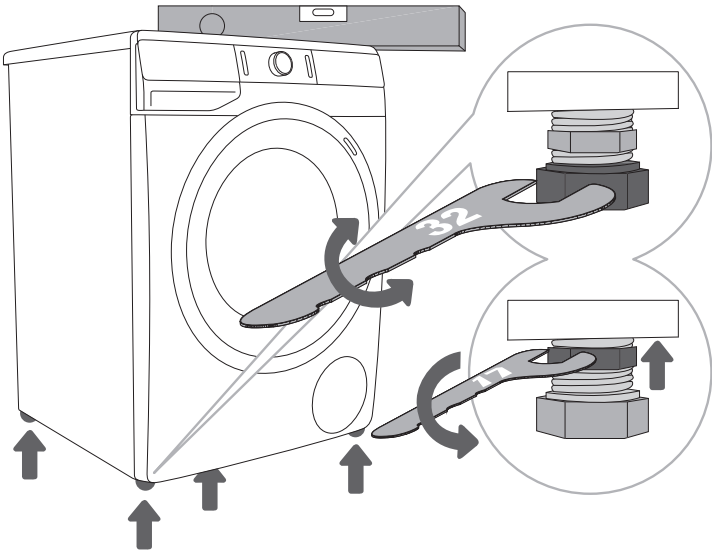

1 Level the washing machine in longitudinal and traverse direction by rotating the adjustable feet.

2 After adjusting the height of the feet, firmly tighten the jam nuts (counter nuts) using a spanner No 17, by turning them towards the bottom of the washing machine ⬆ (see figure).

Incorrect levelling of the washing machine with the adjustable legs may cause vibration, appliance sliding across the room, and loud operation. Incorrect levelling of the washing machine is not subject to warranty.

Sometimes, unusual or louder noise may appear during appliance operation; these are mostly the result of improper installation.

WASHING MACHINE PLACEMENT

If you also have a Gorenje dryer of corresponding (same) dimensions, it can be placed on top of the Gorenje washing machine (in this case, vacuum feet must be used) or next to it (figures 1 and 3).
If your Gorenje washing machine is smaller (minimum depth 545 mm) than your Gorenje dryer, then the dryer support has to be purchased (figure 2). It is essential to use the vacuum feet! Additional equipment (dryer support (a) and vacuum feet (b)) are available for purchase at service units.
The surface on which the appliance is placed should be clean and level.
Gorenje washing machine onto which you intend to place the Gorenje dryer should hold the weight of the Gorenje dryer (see chapter »WASHING MACHINE DESCRIPTION/Technical information«).

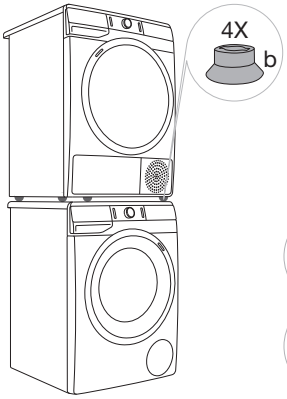

1

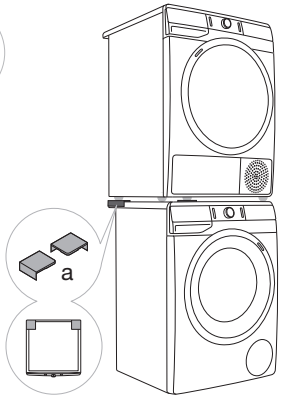

2

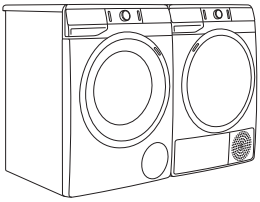

3

Washing machine installation clearances

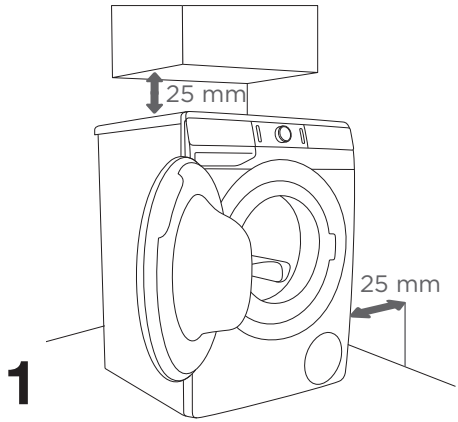

1

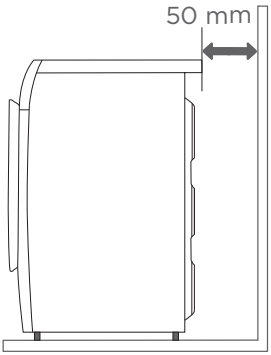

2

The washing machine may not be in contact with a wall or adjacent furniture. For optimum washing machine operation, we recommend observing the clearances from the walls as indicated in the figure.
In case of failure to observe the minimum required clearances, safe and correct washing machine operation cannot be ensured. Moreover, overheating can also occur (figures 1 and 2).

Installing the washing machine under a countertop is not recommended.

Opening the washing machine door (bird's-eye view)

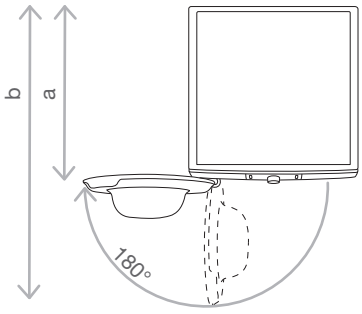

See chapter »WASHING MACHINE DESCRIPTION/Technical information«).

a = Washing machine depth
b = Depth with door open

⚠ Before connecting the washing machine to the power mains, wait for at least 2 hours until it reaches room temperature.

CONNECTING TO WATER SUPPLY

Attach the hose to the water tap by screwing it onto the thread.

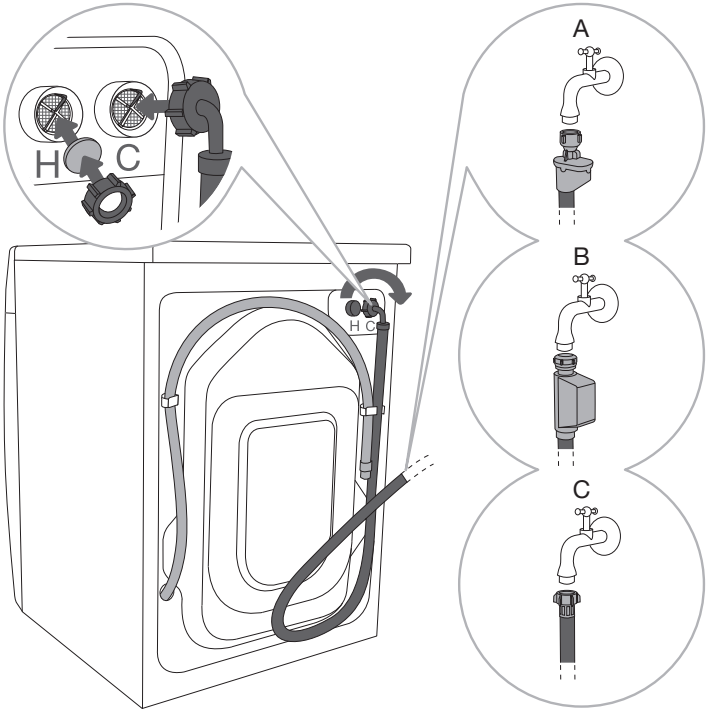

A AQUA - STOP

B TOTAL AQUA - STOP

C REGULAR CONNECTION

If your washing machine features a hot and cold water connection, but you only wish to connect it to cold water supply, do not install the hot water hose and close the hot water connection on the back of the washing machine with the supplied cap.

If your washing machine features hot and cold water connection with full aquastop (option B), and you only wish to connect it to the cold water supply, then seal the hot water hose with a suitable 3/4" plug that is not supplied with the appliance. The 3/4" plug is available in specialized plumbing supplies stores.

For normal washing machine operation, the pressure in the water mains should be between 0.05 and 0.8 MPa (0,5 - 8 bar). Minimum dynamic water pressure can be determined by measuring the water flow. In 15 seconds, 3 litres of water should flow from a fully open tap.

If your model has connections for both hot and cold water, then connect one hose to the cold water supply (blue wing nut or blue mark on the hose) and the other one to the hot water supply (red wing nut or red mark on the hose), as indicated on the back of the washing machine. Connections are labelled with letters C and H (C = cold, H = hot). Warm water (mixture of hot and cold water) is only added for programmes at 40°C or higher.

Tighten the water supply hose by hand, firmly enough for the hose to have a good seal (max. 2 Nm). After connecting the hose, the seal must be checked for any leaks. Do not use pliers or similar tools when connecting the hose as this could damage the nut thread.

Only use the water supply hose supplied with the appliance. Do not use any used or other hoses.

AQUA - STOP (ONLY WITH SOME MODELS)

If an internal tube or hose is damaged, a shut-off system is activated that cuts the water supply to the washing machine. In such case, the control glass (a) will turn red. Replace the water supply hose.

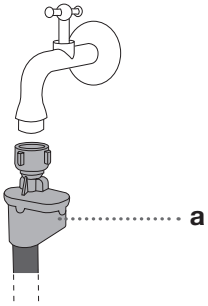

TOTAL AQUA - STOP (ONLY WITH SOME MODELS)

If an internal tube or hose is damaged and if water is present on the bottom of the washing machine, a shut-off system is activated that cuts the water supply to the washing machine. In this case, the washing process will be stopped, water supply will be cut off, and the washing machine will switch on the pump and signal an error.

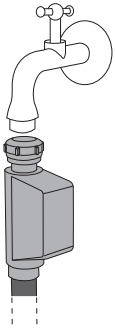

- Do not dip the water supply hose with the AQUA - STOP system in water as it contains an electric valve.

- When connecting the water supply hose, make sure to connect it in a way that allows adequate and unobstructed water supply.

CONNECTING AND SECURING THE WATER DISCHARGE HOSE

Feed the water discharge hose into a washbasin or a bathtub, or connect it directly to a drain (discharge hose minimum diameter 4 cm). The vertical distance from the floor to the end of the discharge hose may be no more than 100 cm and no less than 60 cm. It can be attached in three ways (A, B, C).

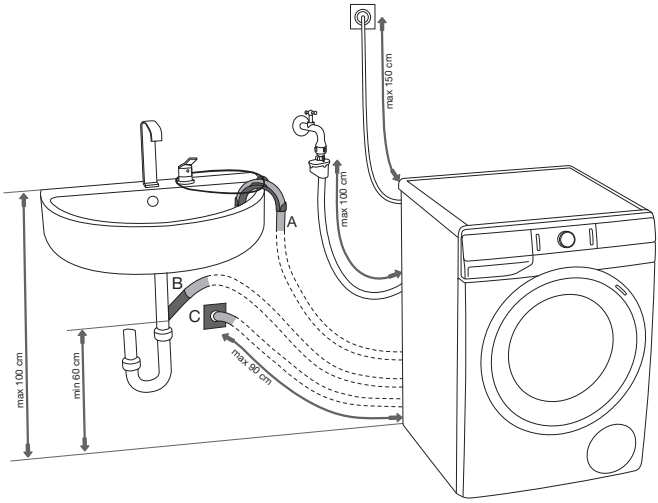

A Discharge hose end may be placed over a washbasin or a bathtub. B Use a string fed through the opening in the elbow support to attach the hose and prevent it from slipping to the floor.

B Discharge hose may also be attached directly to the washbasin drain.

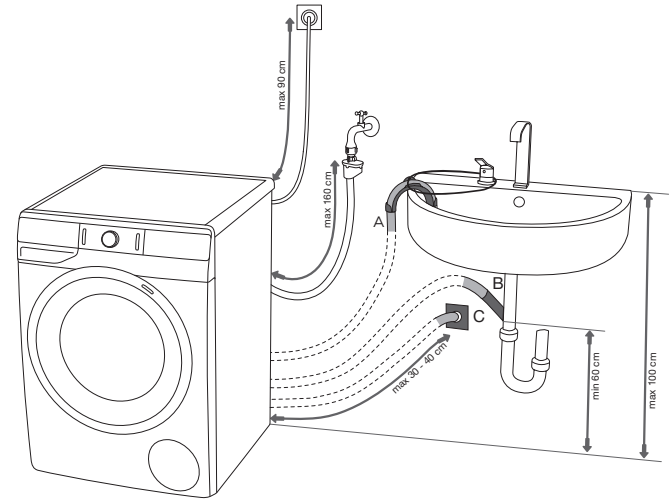

C Discharge hose can also be attached to a wall drain with a trap; such trap should be properly installed to allow cleaning.

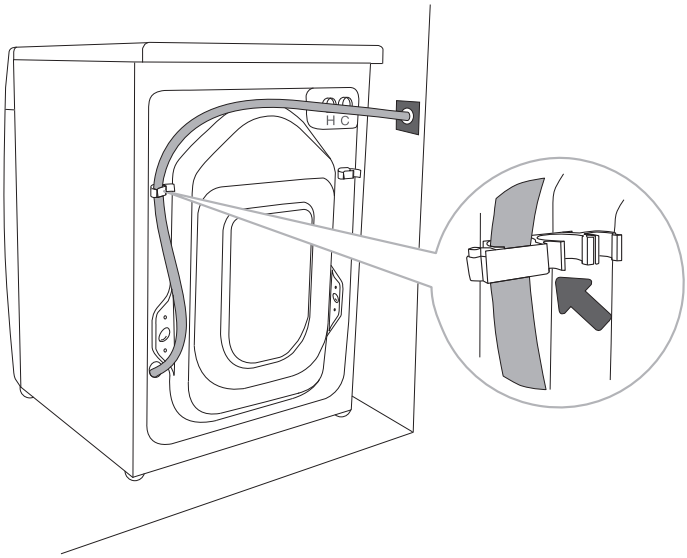

The discharge hose has to be attached and affixed to the pin on the back of the washing machine, as shown in the figure.

If the discharge hose is not correctly attached, safe and correct washing machine operation cannot be ensured.

CONNECTING THE APPLIANCE TO THE POWER MAINS

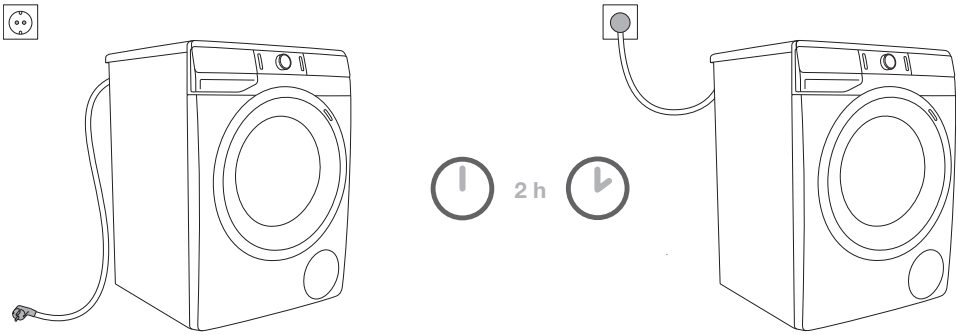

⚠ Before connecting the washing machine to the power mains, wait for at least 2 hours until it reaches room temperature.

Connect the washing machine to a grounded power outlet. After installation, the wall outlet should be freely accessible. The outlet should be fitted with an earth contact (in compliance with the relevant regulations).

Information on your washing machine is indicated on the rating plate (see chapter »WASHING MACHINE DESCRIPTION/Technical information«).

⚠ We recommend using over-voltage protection to protect the appliance in case of a lightning strike.

⚠ The washing machine may not be connected to the power mains using an extension cord.

- Do not connect the washing machine to an electrical outlet intended for an electric shaver or hair dryer.

- Any repair and maintenance pertaining to safety or performance should be done by trained experts.

- A damaged power cord may only be replaced by a person authorized by the manufacturer.

BEFORE USING THE APPLIANCE FOR THE FIRST TIME

Make sure the washing machine is disconnected from the power mains; then, open the door towards you (figures 1 and 2).

Before first use, clean the washing machine drum with a soft moist cotton cloth and water, or use the Cotton 90°C programme. There should be no laundry in the washing machine drum; the drum should be empty (figures 3 and 4).

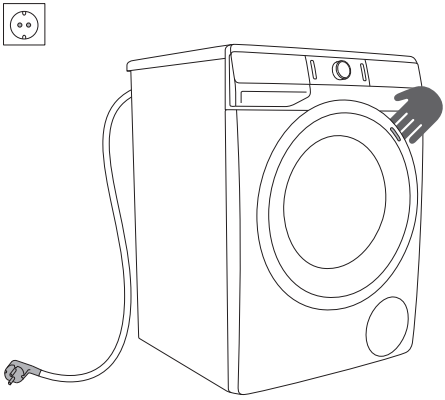

1

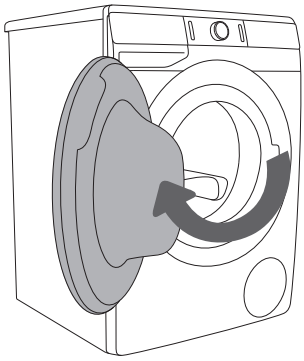

2

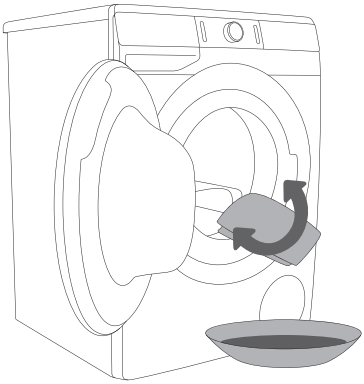

3

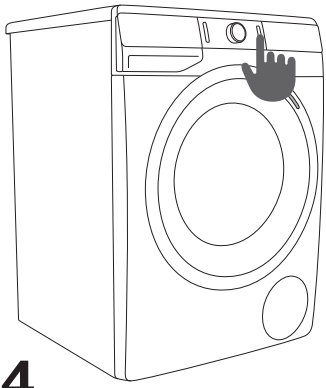

4

⚠ Do not use any solvents or cleaning agents that could damage the washing machine (please observe the recommendations and warnings provided by the cleaning agent manufacturers).

WASHING PROCESS, STEP BY STEP (1–7)

STEP 1: HEED THE LABELS ON THE LAUNDRY

Normal wash; Sensitive laundry	Max. washing temp. 95°C 	Max. washing temp. 60°C 	Max. washing temp. 40°C 	Max. washing temp. 30°C 	Hand wash only 	Do not wash 
Bleaching	Bleaching in cool water 			Bleaching not allowed 		
Dry cleaning	Dry cleaning with all agents 	Petroleum solvent R11, R113 		Dry cleaning in kerosene, pure alcohol, and R113 	Dry cleaning not allowed 	
Ironing	Hot ironing, max. 200°C 	Hot ironing, max. 150°C 		Hot ironing, max. 110°C 	Ironing not allowed 	
Drying	Dry flat (place on a flat surface)	Drip dry Line dry 		High temperature Low temperature 	Do not tumble dry 	

STEP 2: PREPARING THE WASHING PROCESS

1. Sort the laundry by type of fabric, colour, soiling, and allowed washing temperature (see PROGRAMME TABLE).
2. Wash the laundry that sheds a lot of fibre or lint separately from other laundry.
3. Close the buttons and zippers, tie any ribbons, and turn the pockets inside out; remove any metal clips that could damage the laundry and washing machine interior, or clog the drain.
4. Place very sensitive clothes and small items in a special-purpose laundry washing bag. (The special purpose laundry bag is available as an optional accessory.)

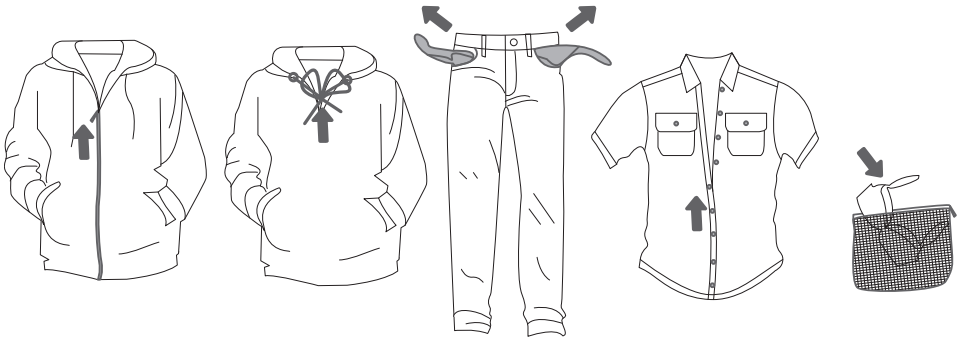

SWITCHING ON THE WASHING MACHINE

Use the power cord to connect the washing machine to power mains, and connect the washing machine to water supply.
Press the (1) **ON**/OFF/RESET button to switch on the washing machine (figure 1).

With some models, the washing machine drum is also lit for 5 minutes when the washing machine is switched on (figure 2).
The light in the washing machine drum can also remain lit during appliance operation, if you press the START/**PAUSE** (3) key, as well as after the washing programme is completed.
(The lamp in the washing machine drum is not suitable for any other use.)

The lamp in the washing machine drum may only be replaced by the manufacturer, a service technician or an authorized person.

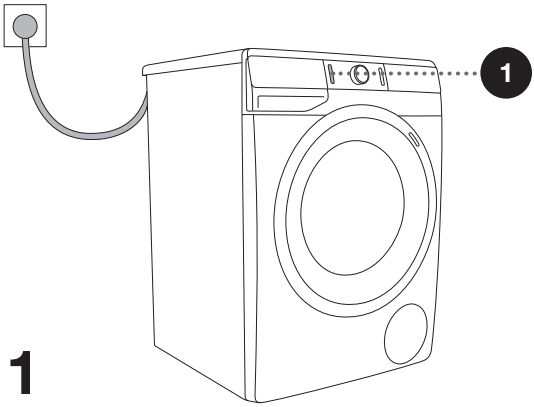

1

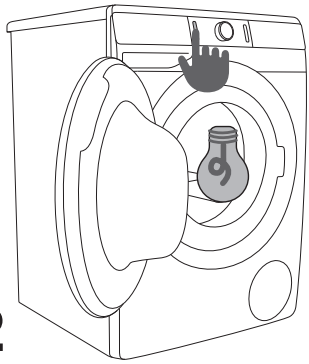

2

LOADING THE WASHING MACHINE

Open the washing machine door by pulling the handle towards you (figure 1).
Insert the laundry into the drum (after making sure the drum is empty) (figure 2).
Close the washing machine door (figure 3).

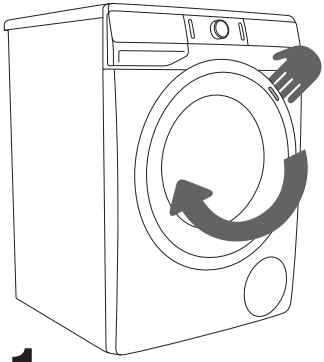

1

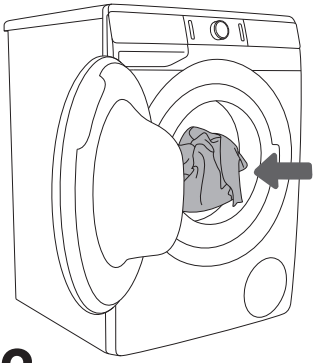

2

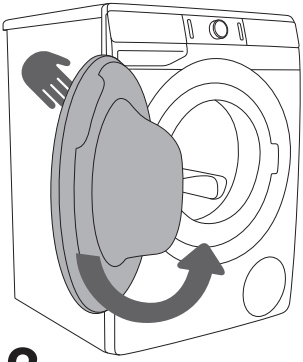

3

Do not overload the drum! See PROGRAMME TABLE and observe your nominal load as indicated on the rating plate.
If the washing machine drum is too full, the laundry will not be washed as thoroughly.

STEP 3: CHOOSING THE WASHING PROGRAMME

Choose the **programme** by rotating the programme selector knob (2) to the left or to the right (depending on the type of laundry and how heavily soiled it is). See PROGRAMME TABLE. When you select the washing programme, the light (2a) on the display unit next to the selected washing programme lights up.

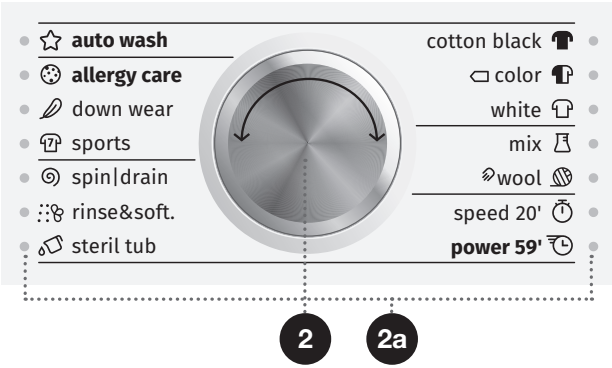

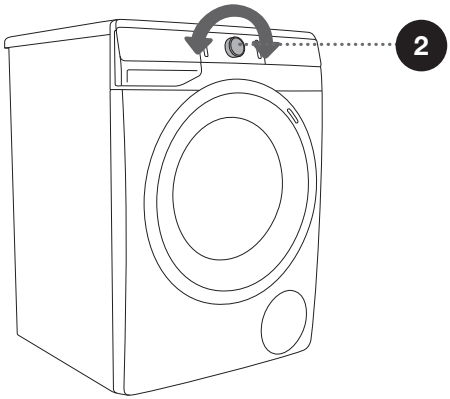

During operation, the programme selector knob (2) will not rotate automatically.

Washing programmes are comprehensive programmes that include all washing stages, including softening and spinning (this does not apply to Partial programmes).

Partial programmes are independent programmes. Use them when you feel you do not need the entire washing programme.

PROGRAMME TABLE

Programme	Max. load	Programme description
Cotton black 30°C - 40°C	** (1/2)	This programme is used for washing dark laundry using special-purpose detergents for black laundry. The programme washes at low temperatures, with gentle tumbling and lower spinning rate.
Cotton color --; - 60°C	* MAX	Programme for lightly to moderately dirty laundry. The temperature can be set separately; therefore, observe the instructions indicated on the clothing. Wash the clothes worn directly on the skin at 60°C. Less heavily soiled laundry will be thoroughly cleaned at 40°C. Spinning speed can also be freely selected. Programme duration and amount of water will be adjusted to the amount of laundry.
Cotton white 40°C - 90°C	* MAX	Programme for normally or heavily soiled laundry, white or coloured. The temperature can be set separately; therefore, observe the instructions indicated on the clothing worn directly on the skin. Choose 40°C if the laundry is only lightly dirty. Spinning speed can be set to your preference. Programme duration and amount of water will be adjusted to the amount of laundry.
Mix (Mixed laundry/ Synthetics) --; - 60°C	3,5 kg	Washing programme for delicate clothing made of synthetic and mixed fibres or viscose, and for simple care of cotton. Observe the instructions indicated on the clothing. Most garments made of synthetic fibres are washed at 40°C.
Wool/Handwash --; - 40°C	2 kg	Gentle washing programme for washing wool, silk, and clothes that require manual washing. Maximum temperature is 40°C. This programme has a short spinning cycle. Top spinning speed available is 800 rpm.
Speed 20´ 30°C	2,5 kg	Quick washing programme for laundry that only needs refreshing.
Power 59´ 40°C	** (1/2)	Programme for smaller amounts of lightly soiled laundry. The programme washes with gentle tumbling and lower spinning rate.

* Maximum load (MAX)
** Half load (1/2)
/ Any load (0 kg – MAX kg)
-- Cold wash

Programme	Max. load	Programme description
Steril tub (Self-cleaning programme)	0 kg	Washing programme is used to clean the drum and to remove detergent residues and bacteria. To select the programme, rotate the programme selector knob to the left or to the right to the Steril tub (Self-cleaning programme) position . Other extra functions cannot be selected. The drum has to be empty. You can add some distilled (spirit) vinegar (approx. 2 dl) or sodium bicarbonate (1 tablespoon, or 15 g). We recommend running the programme at least once a month.
Rinse/Softening (Partial programme)	/	For softening, starching, or impregnating the washed laundry. It can also be used as a rinse programme, but without added softener. It is completed with an additional rinse. You can also choose **WATER+** (HIGH WATER LEVEL) by selecting the extra function.
Spin/Drain (Spinning rate/ Drain) (Partial programme)	/	Use the programme when you only wish to spin the laundry. If you only wish to pump out the water from the washing machine, press the **SPIN** (10) button to select (drain) 0:00
Sports (Sportswear) 30°C - 40°C	3,5 kg	Slightly soiled sportswear made of cotton, microfibres and synthetic fibres, at lower spinning rates and a brief final spinning cycle.
Down wear 20°C - 40°C	** (1/2)	Washing programme is suitable for pillows and jackets stuffed or padded with down. The wash takes place at a low temperature, with a large amount of water, with gentle tumbling, and a gentle spin cycle.
Allergy care 40°C - 90°C	** (1/2)	Washing programme is used to wash normal to heavily soiled clothes that require special care, such as clothes for people with highly sensitive skin or skin allergies. We recommend turning the garments inside out, as this will also thoroughly wash out the skin and other residues. You can also select the option to wash at maximum temperature and maximum spinning speed.

* Maximum load (MAX)
** Half load (1/2)
/ Any load (0 kg – MAX kg)
-- Cold wash

Programme		Max. load	Programme description
☆	**Auto wash** 30°C	* MAX	Washing programme automatically adjusts the duration of the main wash and the number of rinses depending on the amount of laundry in the machine. Use it for lightly soiled laundry. No extra programme settings are possible.

* Maximum load (MAX)
** Half load (1/2)
/ Any load (0 kg – MAX kg)
-- Cold wash

Maximum amount of laundry in kg (for the cotton programme) is indicated on the rating plate fitted under the washing machine door (see chapter »WASHING MACHINE DESCRIPTION/ Technical information«).

Maximum or nominal load applies to laundry prepared pursuant to the IEC 60456 standard.

For better washing effect, we recommend loading the drum to 2/3 when using the cotton programmes.

STEP 4: CHOOSING THE SETTINGS

Most programmes feature basic settings, but these settings can be changed.

Adjust the settings by pressing the relevant function button (before pressing the (3) START/PAUSE button).
Functions that cannot be changed with the selected washing programme are partly lit (dimmed). Certain settings cannot be selected with some programmes. Such settings will not be lit, and the button will flash when pressed (see FUNCTION TABLE).

Description of lighting of functions for the selected programme:

- **Lit** (Basic/preset setting);
- **Dimmed** (Functions that can be adjusted) and
- **Unlit** (Functions that cannot be selected).

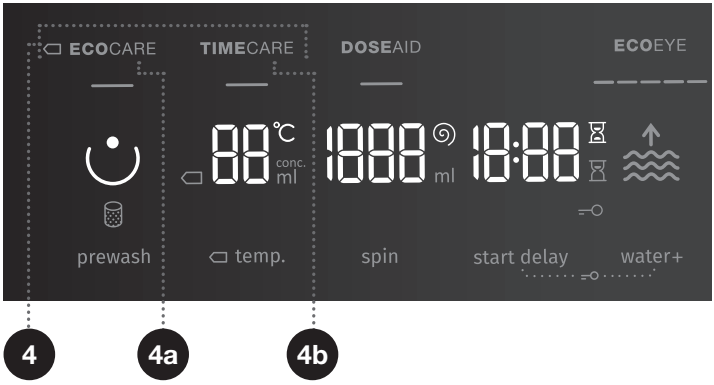

4

WASHING MODE

NORMALCARE (Basic/default setting)
ECOCARE (4a) (This mode will save energy; washing time will be longer, and water consumption will be lower.)
TIMECARE (4b) (This mode will save time as programme duration will be shorter, but it will use more water.)
We recommend a half-load for the Cotton programme.
Light on the button for the selected washing mode is lit.

5

DOSEAID

With the (5) **DOSE**AID function, the washing machine will recommend the optimum amount of powder or liquid detergent according to the selected settings. Recommended amount of powder or liquid detergent depends on:

- **Water hardness** (the following settings are available: soft, medium, hard. Default setting is the medium level, but the user may adjust it. See chapter »INTERRUPTIONS AND CHANGING THE PROGRAMME/Personal settings menu).« For correct functioning of the (5) **DOSE**AID function, we recommend setting the correct water hardness level.
- **Selected washing programme** and
- **Amount of laundry** (load) – the washing machine measures the amount of laundry each time the (5) **DOSE**AID function is used.

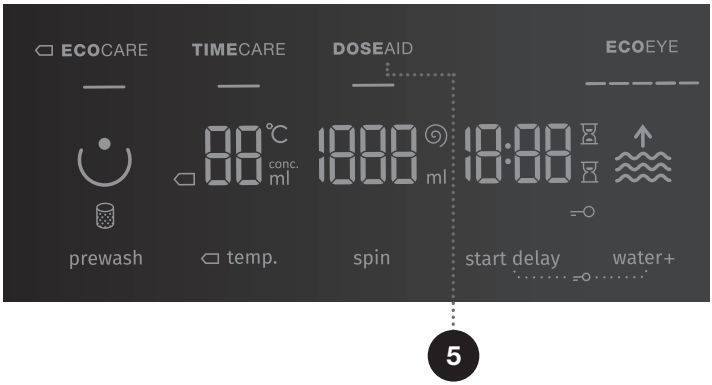

In order for the (5) **DOSE**AID feature to function correctly, the STEP 2 (preparing the laundry, switching on, and loading the washing machine) and STEP 3 (selecting the washing programme) have to be carried out first.



1. Activate the function by pressing on position (5) **DOSE**AID. An indicator light will light up under the sign (5) **DOSE**AID when it is activated.

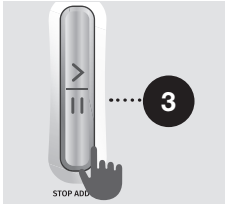

2. Press the (3) **START**/PAUSE button. The washing machine will start measuring the amount of laundry in the drum.



3. Measuring process is indicated with alternating flashing of the indicator lights on the display unit.



4. Based on the measured amount of laundry in the drum and other settings, the recommended amount of powder or liquid detergent will be displayed on the display unit [in ml]. The left-hand side display unit will indicate the recommended amount of concentrated detergent, and the right-hand side display will indicate the recommended amount of non-concentrated detergent.

   To determine whether your powder or liquid detergent is concentrated or not, check the packaging of your detergent.

   To check the amount of concentrated or non-concentrated powder or liquid detergent, press the **DOSE**AID position (5) again.

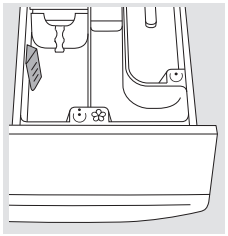

5. Add the recommended amount of powder or liquid detergent into the dosing tank. Use the powder or liquid detergent **Level indicator** for accurate dosing (see chapter »RECOMMENDATIONS FOR WASHING AND ECONOMIC USE YOUR WASHING MACHINE«).

To start the washing programme, press the (3) START/PAUSE button.

9

⏛ **TEMP.** (WASHING TEMPERATURE)

Changing the temperature for the selected program.
Each program has a preset temperature that can be changed by pressing the (9) position ⏛ **TEMP.** (WASHING TEMPERATURE).
(-- indicates cold wash)
The temperature is displayed on the display unit above the button.

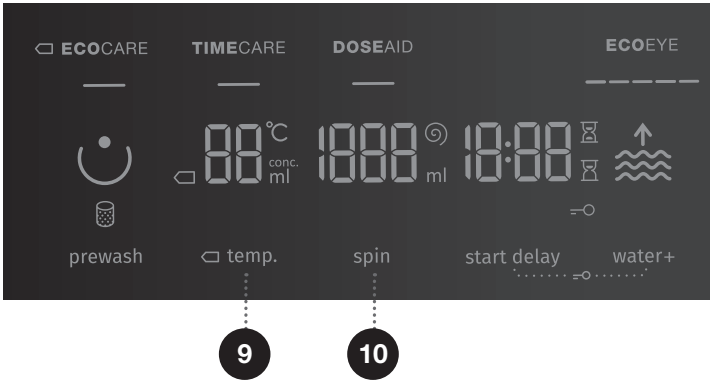

10

SPIN (SPINNING RATE/DRAIN/PUMP STOP)

To adjust the spinning rate. With preset or selected spinning rate, the symbol will be lit on the display unit.
If you select draining without spinning, the symbol will appear on the display unit.
If you select »Pump stop«, the symbol will appear on the display unit.
Select the »Pump stop« function when you wish the laundry to stay soaked in the water from the last rinse cycle in order to prevent it from creasing when you are unable to take it from the washing machine immediately after the washing programme is complete. You may set the desired spinning rate. To continue the program, press the (3) **START**/ PAUSE button that is lit. Water will be drained (pumped out) and the final spin cycle will be run.

11 + 13

CHILD LOCK

A safety feature. To activate the child lock, simultaneously press the (11) **START DELAY** and (13) **WATER+** (HIGH WATER LEVEL) positions and hold them for at least three seconds. The selection will be confirmed by an acoustic signal and by an indicator light (the symbol ⊸○ (12) will be lit). Follow the same procedure to deactivate the child lock. As long as the child lock is activated, programme, settings, or additional functions cannot be changed.

Child lock remains active even after the washing machine is switched off. For safety reasons, the child lock does not prevent switching off the washing machine with the (1) ON/OFF/RESET button. To select a new programme, the child lock must first be deactivated.

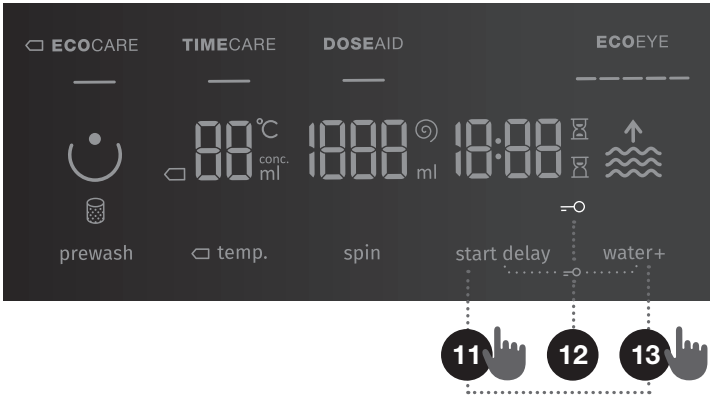

11

START DELAY

Use this function to start the washing cycle after a certain amount of time has elapsed. Press the (11) **START DELAY** position. -:-- will appear on the display unit (11a). If, for example, you choose a programme with a duration of 2:39, the time will be indicated on the display unit, and the symbol ⧖ (11b) will be lit next to the time indication.
If the function (11) **START DELAY** has been selected, then the symbol ⧖ (11c) will be lit.
By pressing the (11) **START DELAY** position, you can adjust the time in 30-minute steps up to 6 hours, and by 1-hour steps up to 24 hours.
If nothing is pressed for 5 seconds, actual washing time will be displayed.
To set the time to the end of the washing programme again, press the (11) **START DELAY** position.
The function is activated when the (3) START/PAUSE button is pressed. Washing machine is counting down the set time. When the countdown reaches zero, the selected washing programme will start automatically.

- To interrupt or change the start delay time, press and hold the (1) ON/OFF/RESET button. Press the (11) **START DELAY** position to select a new delay time and confirm it by pressing the (3) START/PAUSE button.
- To quickly cancel the start delay, press and hold the position (11) **START DELAY** for 3 seconds. The washing program will resume.
- In case of a power supply failure before the delay time has elapsed, press the (3) START/PAUSE button to resume the delay time countdown.

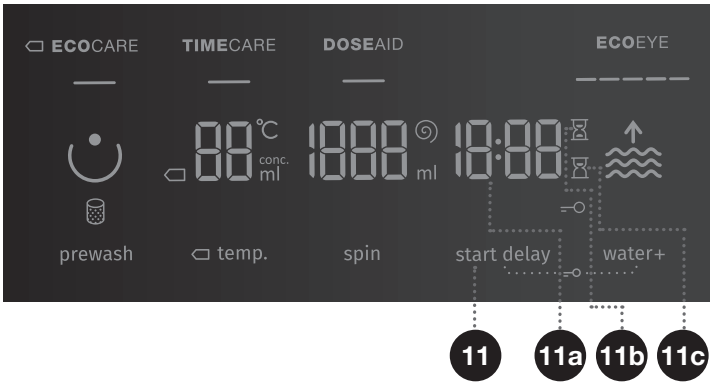

STEP 5: SELECTING ADDITIONAL FUNCTIONS

Activate/deactivate the functions by pressing the desired function (before pressing the (3) START/PAUSE button).

Some settings cannot be selected with certain programmes. Such functions will not be lit on the display unit, and when the corresponding button is pressed, an acoustic signal will be emitted and the light on the button will flash (see FUNCTION TABLE).

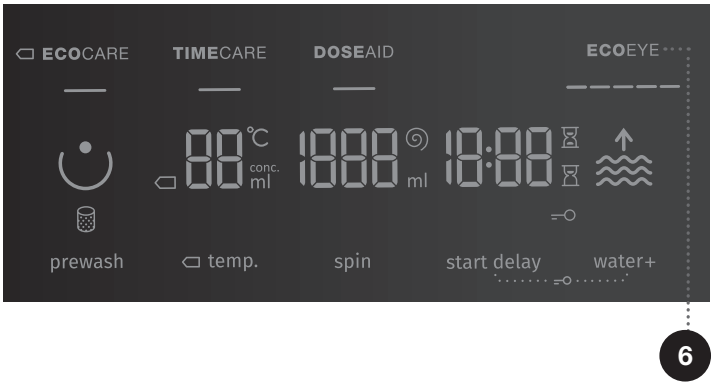

6

ECOEYE

Displays information about how economical your washing machine setting is.



ECOEYE displays water and power consumption based on the selected programme and any extra functions or settings. The more symbols or lit, the more economical setting you have selected and the lower water and power consumption.



ECOEYE displays a less economical washing setting with higher water and power consumption.

The **ECO**EYE function offers control of the energy values of selected washing programmes and extra washing functions. By choosing different settings, the user can save on water and power consumption (e.g. by using the **ECO**CARE function).

7

PREWASH

Washing heavily soiled laundry, particularly with stubborn superficial stains.

If you select PREWASH, add the detergent into the prewash compartment.

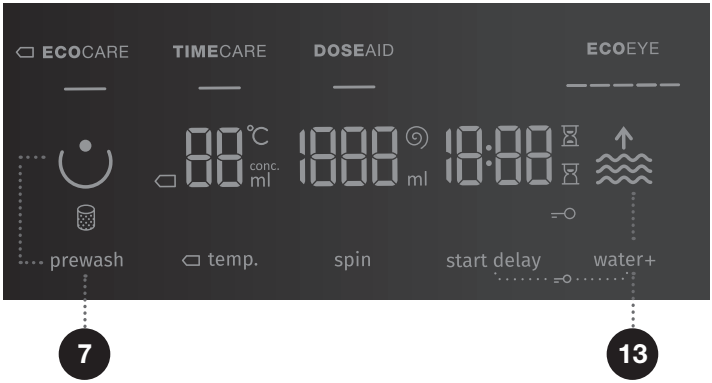

13

WATER+ (HIGH WATER LEVEL)

The laundry is washed with a higher water level (2 levels) and with an additional rinse.

Basic/default setting

Level 1 – higher water level

Level 2 – higher water level with an extra rinse cycle

When the washing machine is switched off, all extra functions return to their basic or custom settings, except for the acoustic signal setting.

If you have set the **START DELAY** function and you are using liquid detergent, we do not recommend setting a programme without a pre-wash.

FUNCTION TABLE

Programmes	Temp. [°C]	**NORMAL**CARE (basic/default setting)	⌂ **ECO**CARE	**TIME**CARE	**WATER+** (HIGH WATER LEVEL)	**DOSE**AID	**ECO**EYE	**PREWASH**	**PUMP STOP**	**SPIN** (SETTING THE SPINNING RATE)
Cotton black	40	•		•	•	•	•		•	•
	30	•		•	•	•	•		•	•
Cotton color	⌂ 60		•				•		•	•
	⌂ 40		•				•		•	•
	60	•		•	•	•	•	•	•	•
	40	•		•	•	•	•	•	•	•
	30	•	•	•	•	•	•	•	•	•
	20	•	•	•	•	•	•		•	•
	--	•		•	•	•	•		•	•
Cotton white	90	•	•	•	•	•	•	•	•	•
	60	•	•	•	•	•	•	•	•	•
	40	•	•	•	•	•	•	•	•	•
Mix (Mixed laundry/ Synthetics)	60	•	•	•	•	•	•	•	•	•
	40	•	•	•	•	•	•	•	•	•
	30	•	•	•	•	•	•	•	•	•
	20	•	•	•	•	•	•		•	•
	--	•		•	•	•	•		•	•
Wool/Handwash	40	•		•	•	•	•		•	•
	30	•		•	•	•	•		•	•
	--	•		•	•	•	•		•	•
Speed 20´	30	•				•	•		•	•
Power 59´	40	•				•	•		•	•
Steril tub (Self-cleaning programme)	--	•					•			
Rinse/Softening (Partial programme)	--	•			•		•		•	•

• Additional functions can be used
⌂ Standard programme
-- Cold wash

979870

Programmes		Temp. [°C]	**NORMAL**CARE (basic/default setting)	⌓ **ECO**CARE	**TIME**CARE	**WATER+** (HIGH WATER LEVEL)	**DOSE**AID	**ECO**EYE	**PREWASH**	**PUMP STOP**	**SPIN** (SETTING THE SPINNING RATE)
	Spin/Drain (Spinning rate/Drain) (Partial programme)	--	•					•			•
	Sports (Sportswear)	40	•			•	•	•		•	•
		30	•			•	•	•		•	•
	Down wear	40	•		•	•	•	•	•	•	•
		30	•		•	•	•	•	•	•	•
		20	•		•	•	•	•		•	•
	Allergy care	90	•				•	•		•	•
		60	•				•	•		•	•
		40	•				•	•		•	•
	Auto wash	30	•				•	•		•	•

• Additional functions can be used
⌓ Standard programme
-- Cold wash

TIME OPTIMIZATION DURING THE PROGRAMME PROGRESS

In the early stage of the washing programme, the washing machine uses advanced technology to detect the amount of laundry. After load detection, the washing machine adjusts the programme duration.

STEP 6: STARTING THE WASHING PROGRAMME

Press the (3) **START**/PAUSE button.

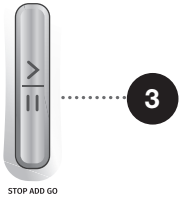

Selected **WASHING MODE**, ⌂ **TEMP.** (WASHING TEMPERATURE), **SPIN** (SPINNING RATE/ DRAIN/PUMP STOP) and **TIME REMAINING TO THE END OF PROGRAMME** ⌛ or **START DELAY** ⌛ (if selected) are indicated on the display unit.
Symbols will be lit on the selected functions.
After pressing the (3) START/PAUSE button, the spinning rate can be adjusted (except in the case of the Steril tub (Self-cleaning programme) and **SPIN** (SPINNING RATE/DRAIN/PUMP STOP)) and child lock can be activated or deactivated, while other settings cannot be changed.

☼ If anything is flashing on the display unit, the washing machine door is open or not closed correctly. Close the washing machine door and press the (3) **START**/PAUSE again to resume the washing programme.

STEP 7: CHANGE OF WASHING PROGRAMME OR MANUAL (PHYSICAL) CANCELLATION

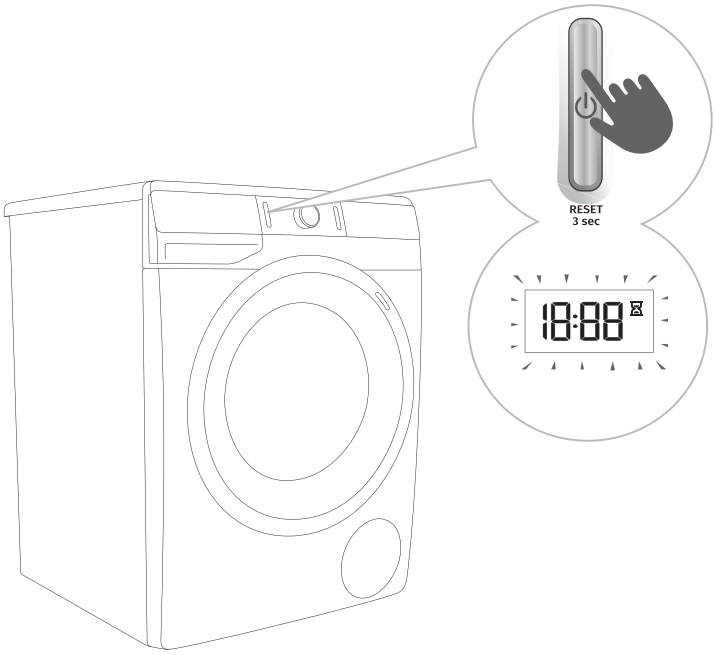

1 **To stop and cancel a washing programme,** press the (1) ON/OFF/**RESET** button and hold it for more than 3 seconds.

2 The washing programme is **temporarily paused** when the time remaining until programme completion is flashing on the display unit ⌛. At the same time, the washing machine pumps the water out of the washing machine drum. When the water is pumped out, washing machine door will be unlocked. If the water in the washing machine is hot, the washing machine will automatically cool it and pump/drain it out.

STEP 8: END OF THE WASHING PROGRAMME

The washing machine will indicate the end of the washing programme with an acoustic signal and »End« will appear on the display until the washing machine switches into low standby mode or switches off. After 5 minutes, the »End« sign will no longer be displayed.



1. Open the washing machine door.
2. Take the laundry from the drum.
3. Close the door!
4. Shut off the water supply tap.
5. Switch off the washing machine (press the (1) ON/**OFF**/RESET button).
6. Unplug the power cord from the outlet.

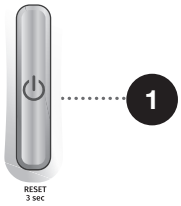

INTERRUPTIONS AND CHANGING THE PROGRAMME

MANUAL INTERRUPTION

To stop and cancel a washing programme, press the (1) ON/OFF/**RESET** button and hold it for more than 3 seconds. Signal lights will flash on the display. At the same time, the washing machine pumps the water out of the washing machine drum. When the water is pumped out, washing machine door will be unlocked. If the water in the washing machine is hot, the washing machine will automatically cool it and pump/drain it out.

PERSONAL SETTINGS

Basic or default settings for each washing programme can also be changed. When you select the programme and additional functions, you may store such combination by pressing the (3) START/PAUSE button and holding it for five seconds. **S C** will appear on the display.
The programme will remain stored until it is changed using the same procedure.
Personal settings can also be reset to factory settings in the user menu.

PERSONAL SETTINGS MENU

Switch on the washing machine by pressing the (1) **ON**/OFF/RESET button. To open the Personal settings menu simultaneously press the positions (10) **SPIN** (SPINNING RATE/DRAIN/PUMP STOP) and (13) **WATER+** (HIGH WATER LEVEL). Indicator lights for ⊂ **ECO**CARE, **TIME**CARE, **DOSE**AID and **ECO**EYE will light up on the display unit. Number 1 will appear on the LED display, indicating the settings function. Rotate the programme selector knob (2) to the left or to the right to choose the function to change.

Press on the ⊂ **TEMP.** (WASHING TEMPERATURE) position to confirm the desired functions and relevant settings. Press the position (7) **PREWASH** to go back one step. If the desired settings are not selected in 20 seconds, the programme will automatically return to main menu.

Number 1 indicates **Acoustic signal volume** setting. Acoustic signal volume can be set at four levels (0 means the sound is off; 1 means that the button sound is activated; 2 means low volume, and 3 means high volume). Choose the volume level by rotating the programme selector knob (2) to the left or to the right. The lowest setting means that the acoustic signal is switched off.

Number 2 indicates **Water hardness setting**. Water hardness can be set at three levels. To select the water hardness level, rotate the program selector knob (2) to the left or to the right and choose between soft (2:1), medium (2:2) and hard (2:3) water.

For correct functioning of the (5) **DOSE**AID function, we recommend setting the correct water hardness level.

Number 3 indicates reset of **Personal programme settings** to factory defaults.

PAUSE BUTTON

The washing programme can always be stopped by pressing the (3) START/**PAUSE** button. The washing programme is **temporarily paused** when the time remaining until programme completion is flashing on the display unit ⌛. If there is no water in the drum and water temperature is not too high, then the door will unlock after a certain period of time, and they can be opened. To resume the washing program, first close the door and then press the key (3) **START**/PAUSE button.

ADDING/REMOVING LAUNDRY DURING WASHING MACHINE OPERATION – STOP ADD GO+

After a certain period of time, the washing machine door can be opened if the water level and temperature are below a predefined threshold.
If the conditions below are met, then the electronic door lock is released and the washing machine door can be opened:

- water temperature in the drum has to be suitable,
- water level in the drum has to be below a certain value.

In order to add or remove laundry from the washing machine during programme operation, proceed as follows:

1. Press the (3) START/**PAUSE** button.
2. If all conditions for release of electronic door lock are met, then you can open the washing machine door and add or remove laundry from the drum:
    - If the water level in the drum is above a certain level, this will be indicated by the flashing of the **WATER+** symbol (HIGH WATER LEVEL). If you press the **WATER+** position (HIGH WATER LEVEL), the water will be pumped out of the drum down to the level that allows releasing the door lock. Then, you can open the washing machine door and add or remove laundry to or from the drum.
    - If the water temperature in the drum is above a certain level, this will be indicated by the flashing of the **ECO**CARE function. In this case, wait for the water in the drum to cool down. When the water cools down to a suitable temperature, the **ECO**CARE function will stop flashing and the door lock will be released. Then, you can open the washing machine door and add or remove laundry to or from the drum.
3. Close the washing machine door!
4. Press the (3) **START**/PAUSE button.

The washing program will resume.

If you add a considerable amount of laundry during the wash, the laundry could be washed less effectively, since the washing machine initially sensed a lower weight of the load of laundry and added a smaller amount of water. Insufficient amount of water relative to the amount of laundry could also cause damage to the laundry (rubbing of dry laundry),
and washing time can be longer.

Washing time will resume from the point at which the washing programme was interrupted.

ERRORS

In case of an error or fault, the programme will be interrupted.
Flashing signal lights and an acoustic signal will warn about such occurrence (see TROUBLESHOOTING TABLE), and the error will be indicated on the display (E:XX).

POWER SUPPLY FAILURE

In case of a power supply failure, the washing programme is interrupted. When power supply resumes, »PF« (Power Failure) will appear on the display unit. To resume the washing programme, press the (3) **START**/PAUSE button.
Delay time will not be reset.
Washing time will resume from the point at which the washing programme was interrupted.

OPENING THE DOOR MANUALLY IN CASE OF A POWER OUTAGE - IN CASE OF A PROGRAM PAUSE

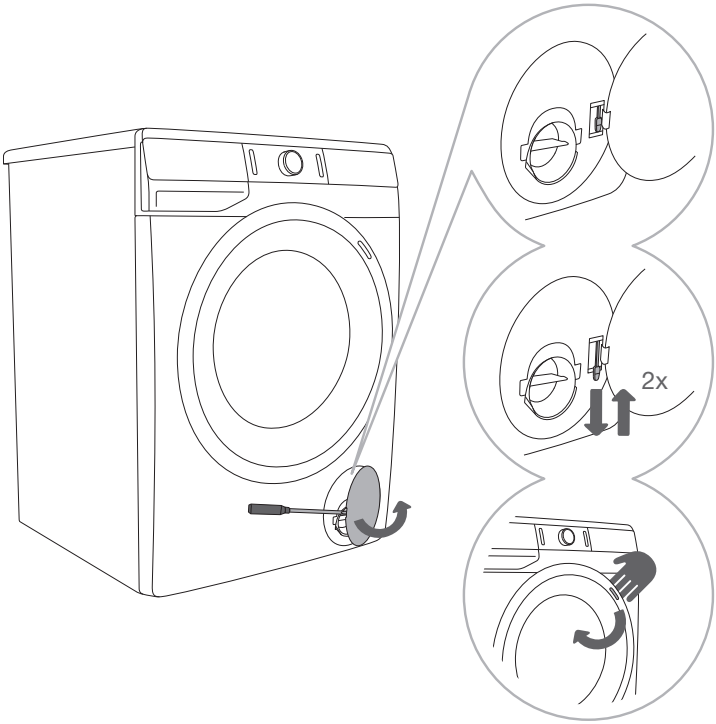

1 When the program is paused or interrupted, open the filter cap using a suitable tool (flat screwdriver or a similar tool).

2 Washing machine door can only be opened by simultaneously pulling the special lever (located at the filter) and the door handle.

3 Open the washing machine door manually by pulling the handle towards you.

OPENING THE DOOR (PAUSE/CANCEL – CHANGE PROGRAMME)

Washing machine door can be opened, if the water level in the machine is low enough and if the water temperature is not excessively high. Otherwise, use manual (physical) interruption (see chapter INTERRUPTIONS AND CHANGING THE PROGRAMME/Manual (physical) interruption).

⚠ If there is still water in the washing machine after a power outage, make sure not to open the door before you manually drain the water from the washing machine via the pump filter (see chapter »CLEANING AND MAINTENANCE/Cleaning the pump filter«).

MAINTENANCE & CLEANING

⚠ **Before cleaning, unplug the washing machine from the power mains.**

Children should not clean the washing machine or perform maintenance tasks without proper supervision!

CLEANING THE DISPENSER TRAY

The dispenser tray should be cleaned at least twice per month.

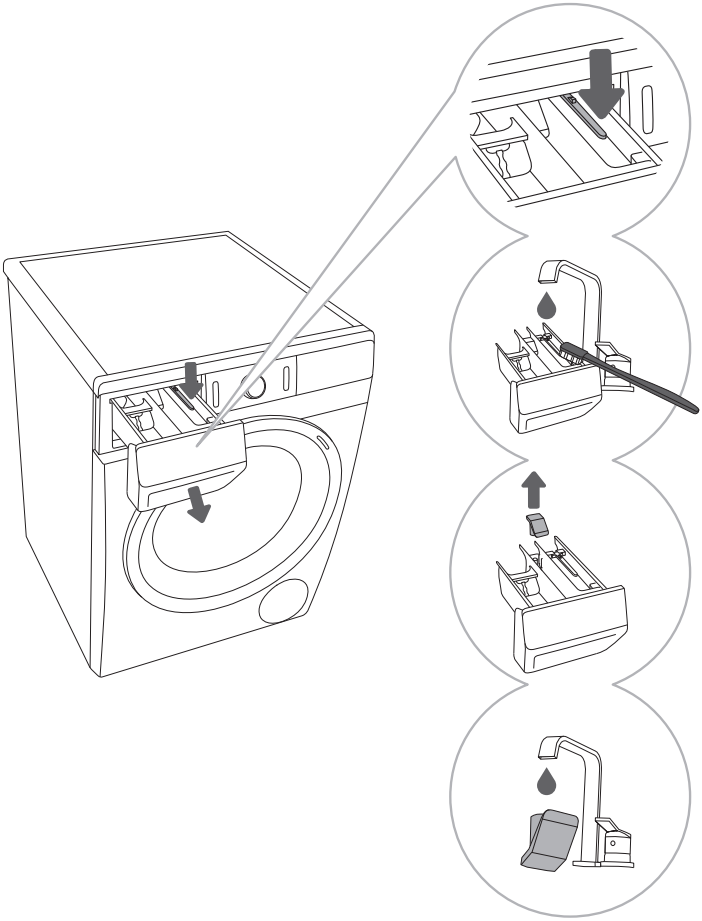

1 To remove the dispenser tray from the housing, press the small tab.

2 Clean the dispenser tray under running water using a brush, and dry it. Also, remove any detergent residue from the bottom of the housing.

3 If required, remove and clean the plug cap.

4 Clean the plug cap under running water and replace it.

Do not wash the dispenser tray in a dishwasher.

CLEANING THE WATER SUPPLY HOSE, DETERGENT DISPENSER HOUSING, AND RUBBER DOOR GASKET

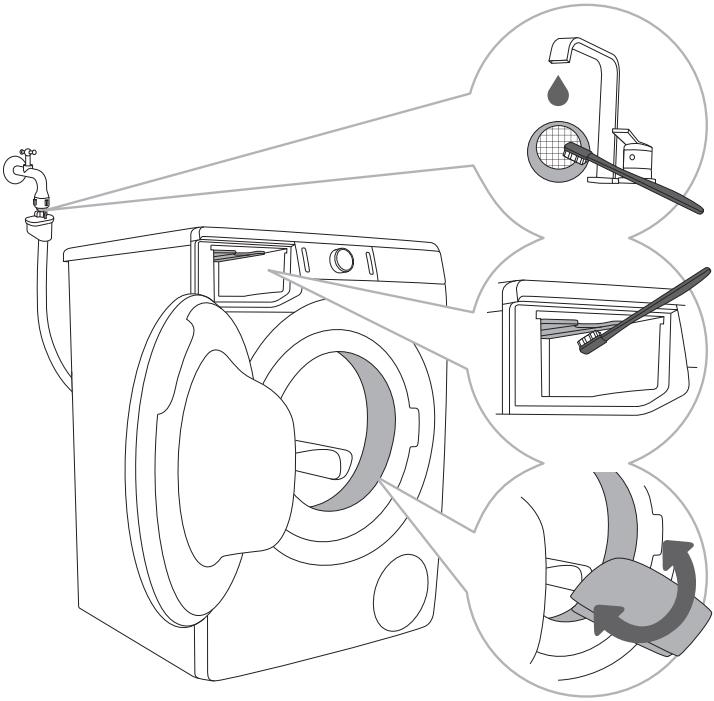

1 Clean the net filter often under running water.

2 Use a brush to clean the entire washing machine rinsing section, especially the nozzles on the upper side of the rinsing chamber.

3 After every wash, wipe the rubber door seal to extend its useful life.

CLEANING THE PUMP FILTER

During cleaning, some water may be spilled. It is therefore recommended to place an absorbent cloth on the floor.

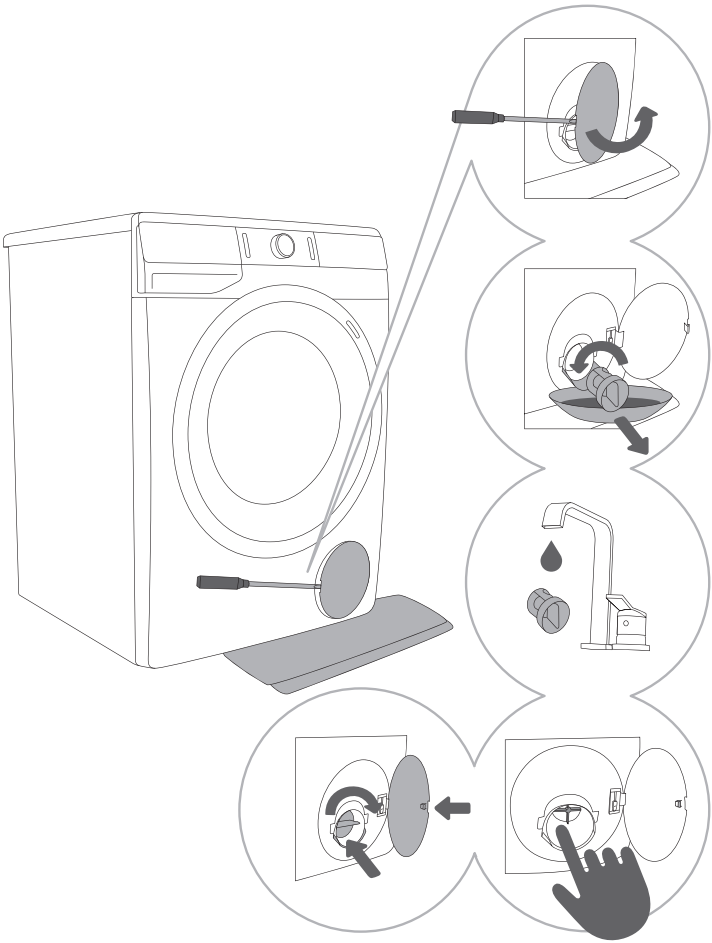

1 Open the pump filter cap using a suitable tool (flat screwdriver or a similar tool).

2 Pull out the water outlet funnel before cleaning the pump filter.
Rotate the pump filter slowly in the counter-clockwise direction.
Pull out and remove the pump filter to allow the water to slowly drain.

3 Clean the pump filter thoroughly under running water.

4,5 Remove all and any objects and impurities from the filter housing and the pump propeller.
Replace the pump filter as shown in the figure and fasten it by rotating in the clockwise direction.
For a good seal, the filter gasket surface should be clean.

⚠ Clean the pump filter and the in-wall water trap whenever the symbol (8) appears on the display unit.

The pump filter must be occasionally cleaned, especially after washing very fleecy, woolly, or very old laundry.

CLEANING THE WASHING MACHINE EXTERIOR

⚠ Always disconnect the washing machine from the power mains before cleaning.

Clean the washing machine exterior and display unit using a soft damp cotton cloth and water.

⚠ Do not use any solvents or cleaning agents that could damage the washing machine (please observe the recommendations and warnings provided by the cleaning agent manufacturers).

Do not clean the washing machine with a jet of water!

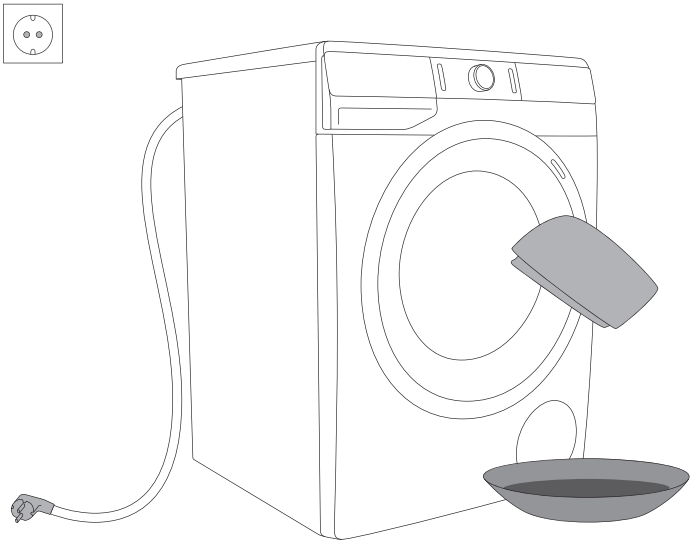

TROUBLESHOOTING

WHAT TO DO ...?

The washing machine shall automatically control the operation of particular functions during the washing cycle. If any irregularity is identified, this will be indicated by reporting (E:XX) on the display. The washing machine will report the error until it is switched off. Disturbances from the environment (e.g. the power grid) may result in various error reports (see TROUBLESHOOTING TABLE). In such case:

- Switch off the washing machine and wait for a few seconds.
- Switch on the washing machine and repeat the washing programme.
- Most errors during operation can be resolved by the user (see TROUBLESHOOTING TABLE).
- If the error persists, call an authorized service unit.
- Repairs may only be carried out by an adequately trained person.
- Repair or any warranty claim resulting from incorrect connection or use of the washing machine shall not be covered by the warranty. In such cases, the costs of repair shall be charged to the user.

The warranty does not cover the errors or failures resulting from disturbances from the environment (lightning strike, power grid failures, natural disasters etc.).

TROUBLESHOOTING AND ERROR TABLE

Problem/ error	Indication on the display unit and problem description	What to do?
E0	**Incorrect settings** 	Restart the programme. If the error reoccurs, call a service technician.
E1	**Temperature sensor error.** 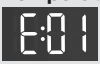	Inlet water too cold. Repeat the washing programme. If the washing machine reports this error again, call a service technician.
E2	**Door lock error.** 	Make sure the washing machine door is closed. Unplug the power cord from the outlet; then, plug the power cord back into the outlet and switch on the washing machine. If the error reoccurs, call a service technician.
E3	**Water filling error.** 	Check the following: • is the water inlet valve open, • is the filter on the water supply hose clean, • is the water supply hose deformed (clipped, clogged etc.), • is the pressure in the water mains between 0.05 and 0.8 MPa (0,5–8 bar). Then, press the (3) **START**/PAUSE button to resume the programme. If the error reoccurs, call a service technician.
E6	**Water heating error** 	Restart the programme. If the error reoccurs, call a service technician.
E7	**Water draining error** 	Check the following: • is the pump filter clean, • is the discharge hose clogged, • is the drain clogged, • if the discharge hose placed is placed below the maximum and above the minimum height (see chapter »INSTALLATION AND CONNECTION/ Connecting and securing the water discharge hose«); then, press the (3) **START**/PAUSE button again. If the error reoccurs, call a service technician.
E9	**Water detected at the bottom of the washing machine (Total Aqua Stop system)** 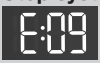	Turn off the appliance and turn it back on. If the error reoccurs, call a service technician.
E10	**Water level sensor error.** 	Unplug the power cord from the outlet; then, plug the power cord back into the outlet and switch on the washing machine. If the error reoccurs, call a service technician.

Problem/ error	Indication on the display unit and problem description	What to do?
E11	**Water overflow** 	If there is water in the drum that exceeds a certain level, and an error is reported on the display unit, the washing program will be interrupted and water will be pumped out of the washing machine. Restart the programme. If the error reoccurs, call a service technician. If there is water in the drum that exceeds a certain level, and an error is reported on the display unit, while the washing machine continues to add water, close the water tap and call a service technician.
E12	**Motor control error** 	Restart the programme. If the error reoccurs, call a service technician.
E22	**Error while locking the door.** 	Door is closed, but it cannot be locked. Switch off the washing machine. Switch it back on and restart the washing program. If the error reoccurs, call a service technician.
E23	**Error while unlocking the door.** 	Door is closed, but it cannot be unlocked. Turn off the washing machine, then turn it back on. If the error reoccurs, call a service technician. To open the door, see chapter »INTERRUPTIONS AND CHANGING THE PROGRAMME/Opening the door manually«.
E36	**Electronics communication failure in the washing machine** 	Unplug the power cord from the outlet; then, plug the power cord back into the outlet and switch on the washing machine. If the error reoccurs, call a service technician.
E37	**Electronics communication failure in the washing machine** 	Unplug the power cord from the outlet; then, plug the power cord back into the outlet and switch on the washing machine. If the error reoccurs, call a service technician.
	**Water drain system alert.** Symbol will appear.	Alert about reduced water flow in the pumping stage. Check the following: • is the pump filter clean, • is the discharge hose clogged, • is the drain clogged, • if the discharge hose placed is placed below the maximum and above the minimum height (see chapter »INSTALLATION AND CONNECTION/Connecting and securing the water discharge hose«).
	**Unevenly distributed laundry** When the washing programme is complete, the symbol will remain lit on the display unit.	Manually distribute the laundry and run the spinning programme. See additional description under TROUBLESHOOTING TABLE.

Problem/ error	Indication on the display unit and problem description	What to do?
cln	**System warning to run the Steril tub (Self-cleaning programme)**  After the washing programme is complete, the signs »cln« and »End« will alternate on the display unit.	We recommend running the Steril tub (Self-cleaning programme).
»PF«	**Power supply failure warning (»PF«/Power Failure)** 	Washing process was interrupted due to power supply failure. To restart, press the (3) **START**/PAUSE button.
	Unresponsive display unit and all buttons	Manually (physically) stop the programme by pressing the button (1) ON/OFF/**RESET** and hold it for more than 3 seconds. Unplug the power cord from the outlet; then, plug the power cord back into the outlet and switch on the washing machine. If the error reoccurs, call a service technician.
	**Washing machine standing by, ready to resume the washing programme** The time remaining until programme completion is alternately lit and off on the display unit ⌛.	To resume the washing program, press the button (3) **START**/PAUSE, or manually (physically) stop the programme and press the button (1) ON/OFF/**RESET** and hold it for more than 3 seconds.
	Preparation for unlocking the door Signal lights will flash on the display unit. 	Wait until the process is completed. If no error is indicated after the process, then a new programme can be started. Water has to be drained. Wait for the door to unlock.

Unevenly distributed laundry or lumps of laundry in the washing machine drum can cause problems such as vibration and noisy operation. The washing machine detects such problems and the UKS* (*stability control system) will be activated.
Smaller loads (e.g. one towel, one sweater, one bathrobe etc.) or clothes made of materials with special geometrical properties are virtually impossible to distribute evenly across the washing machine drum (slippers, large items etc.). This results in several attempts to redistribute the laundry, which in turn leads to longer programme duration. In extreme cases of unfavourable conditions, the programme can be completed without the spinning cycle. The UKS* (*stability control system) allows stable operation and a longer washing machine useful life.

If the problems persist despite observing the advice above, call an authorized service technician.

Repair or any warranty claim resulting from incorrect connection or use of the washing machine shall not be covered by the warranty. In this case, the user will cover the cost of repair.

SERVICING

Before calling a service technician

When you contact a service centre, please state your washing machine's type (1), code/ID (2), model number (3), and serial number (4).

Type, code/ID, model, and serial number are indicated on the rating (type) plate located on the front side of the washing machine door opening.

⚠ In case of a defect, only use approved spare parts by authorized manufacturers.

⚠ Repair or any warranty claim resulting from incorrect connection or use of the washing machine shall not be covered by the warranty. In such cases, the costs of repair shall be charged to the user.

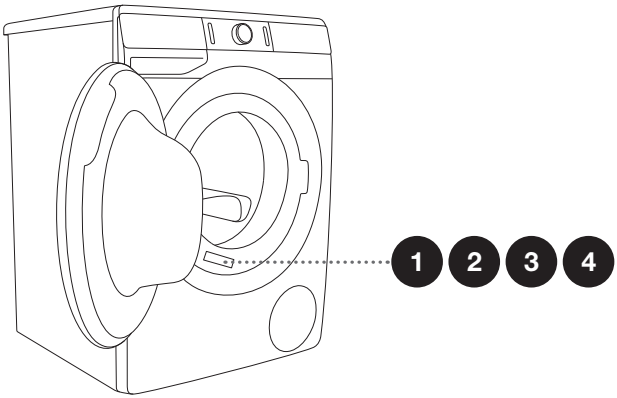

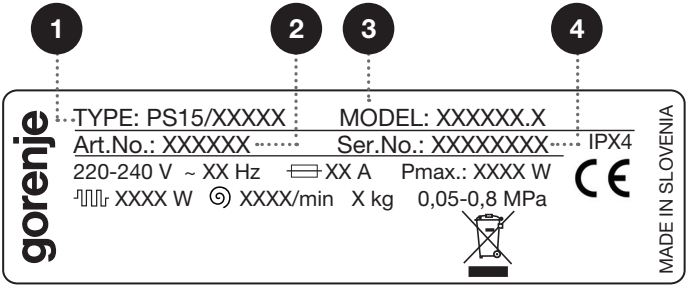

Additional equipment and accessories for maintenance can be viewed on our website at: www.gorenje.com

RECOMMENDATIONS FOR WASHING AND ECONOMIC USE YOUR WASHING MACHINE

Wash new coloured garments separately the first time.

Wash heavily soiled laundry in smaller amounts, with more powder detergent or with a pre-wash cycle.

Apply a special stain remover on stubborn stains before the wash. We recommend referring to STAIN REMOVAL TIPS.

With slightly soiled laundry, we recommend a programme without a pre-wash cycle, use of shorter programmes (e.g. **TIME**CARE) and a lower washing temperature.

If you often wash laundry at low temperatures and with liquid detergents, bacteria may spawn which can cause odour in the washing machine. To prevent such odour, we recommend occasionally running the Steril tub (Self-cleaning programme) (see PROGRAMME TABLE).

We recommend avoiding washing very small amounts of laundry as this will lead to excessive use of energy and poorer washing machine performance.

Loosen any folded laundry before putting it into the drum.
Only use detergents for machine washing.

Add powder or liquid detergents as instructed by the manufacturer, according to the washing temperature and selected washing programme.

If water hardness exceeds 14 °dH, water softener should be used. Heater damage resulting from incorrect use of water softeners shall not be covered by the warranty. Check the information on water hardness with your local water supply company or authority.

Use of chlorine-based bleaches is not recommended as they can damage the heater.

Do not add hardened lumps of powder detergent into the detergent dispenser as this may clog the piping in the washing machine.

When using thick liquid laundry care products, we recommend diluting them with water to prevent clogging the dispenser tray drain.
Liquid detergents are intended for washing programmes without a prewash cycle.

At higher spinning rates, there will be less residual moisture in the laundry. As a result, drying in a tumble dryer will be more economical and faster.

Water hardness	Hardness levels			
	°dH (°N)	m mol/l	°fH(°F)	p.p.m.
1 – soft	< 8,4	< 1,5	< 15	< 150
2 – normal	8,4 - 14	1,5 - 2,5	15 - 25	150 - 250
3 – hard	> 14	> 2,5	> 25	> 250

Check the information on water hardness with your local water supply company or authority.

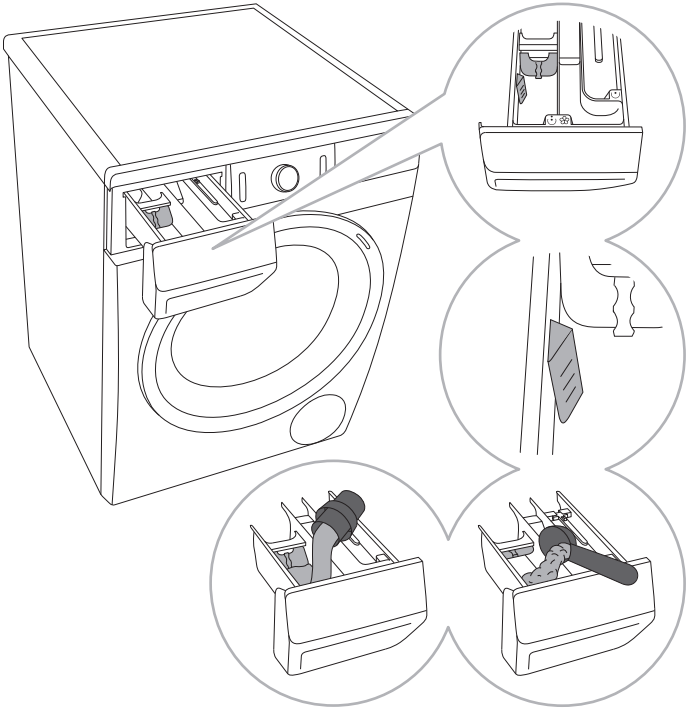

1 A separator/divider tab is supplied with the washing machine, which allows adding liquid detergent to the main wash compartment (left compartment).

2 Powder and liquid detergent level indicator

3 When using powder detergent, the separator/divider tab should be lifted.

4 When using liquid detergent, the separator/divider tab should be lowered.

Symbols of detergent dispenser compartments	
	prewash
	main wash
	softening

We recommend adding powder detergent immediately before the washing cycle. If you add it sooner, make sure the detergent compartment in the dispenser tray is completely dry before adding the powder detergent: otherwise, the powder detergent may cake before the start of the washing process.

Pour the conditioner into the dispenser tray, into the compartment with the symbol ❀. Observe the recommendation on the conditioner packaging.

Do not fill the conditioner compartment over the max. indication (maximum indicated level). Otherwise, the conditioner will be added to the laundry too soon, leading to poorer washing effect.

STAIN REMOVAL TIPS

Before using special-purpose stain removers, try using the natural methods that do not harm the environment on less stubborn stains.

However, prompt action is required! Soak the stain with an absorbent sponge or a paper towel; then, rinse with cold (lukewarm) water – but never with hot water!

Stains	Stain removal
Mud	When the stain is dry, first scrape it off the garment before washing it in the washing machine. If the stain is stubborn, soak it with an enzyme-based stain remover before the wash. If the stain is not stubborn, wash the laundry with liquid detergent or powder detergent and water before the wash.
Antiperspirant	Before washing in the washing machine, apply liquid detergent onto the laundry. Apply stain removers on any stubborn stains. Alternatively, use oxygen-based bleach for the wash.
Tea	Soak or rinse the laundry in cold water and add stain remover if necessary.
Chocolate	Soak or rinse the laundry with lukewarm soapy water. Then, apply lemon juice and rinse.
Ink	Before washing in the washing machine, apply stain removers on the stain. You may also use denatured alcohol. Turn the garment inside out and place a paper towel under the stain. Use the alcohol on the back side of the stain. At the end of the pro-cess, thoroughly rinse the garment.
Felt tip pens	Dilute some starch in water and apply it to the stain. When it dries, scrape it off with a brush; then, wash the garment in the washing machine.
Baby food (urine, mud, food stains)	Before washing in the washing machine, soak the stains in lukewarm water for at least half an hour. For easier stain re-moval, add an enzyme-based stain remover.
Grass	Before washing in the washing machine, soak the laundry in an enzyme-based stain remover. Grass stains can also be re-moved by soaking (for approx. 1 hour) in diluted lemon juice or distilled vinegar.
Eggs	Soak the garment in an enzyme-based stain remover. Soak in cold water for at least 30 minutes or a few hours if the stains are stubborn. Then, wash in the washing machine.
Coffee	Soak the garment in salt water. If the stain is not fresh, soak it with a mixture of glycerine, ammonia and alcohol.
Shoe polish	Apply cooking oil to the stain and rinse.
Blood	Fresh stain – rinse the garment with cool water and wash it in the washing machine. Dried stain – soak the garment in an enzyme-based stain remover. Then, wash in the washing machine. If the stain does not vanish, try to remove it with a bleach suitable for your garment.

Stains	Stain removal
Glue, chewing gum	Place the garment in a bag and put it in the freezer until the stain hardens. Then, remove it with a blunt knife. Then, dilute the stain with a prewash stain remover and rinse thoroughly. Then, wash the laundry as usual.
Makeup	Use a stain remover for the prewash; then, wash in the washing machine.
Butter	Before washing in the washing machine, apply stain remover to the stain. Then, rinse with hot water (as hot as the fabric will al-low).
Milk	Soak the garment in an enzyme-based stain remover. Soak for at least 30 minutes or a few hours if the stains are stubborn. Then, wash in the washing machine.
Fruit juice	Apply a mixture of salt and water on the stain. Leave to take effect for a while, then rinse. You can apply sodium bicarbonate, distilled vinegar or lemon juice on the stain before washing in the washing machine. For old stains, use glycerine. After 20 minutes, rinse with cold water, then wash the laundry in the washing machine.
Wine	Soak the laundry in cold water for at least 30 minutes. Also, use a stain remover. Then, wash in the washing machine.
Wax	Put the garment into the freezer until the wax hardens. Then, scrape it off. Remove the remaining wax by placing a paper towel onto the stain, and then heat it with an iron until the paper absorbs the wax.
Sweat	Before washing in the washing machine, rub liquid detergent thoroughly into the stain.
Chewing gum	Put the garment into the freezer until the chewing gum hardens. Then, scrape it off. Then, wash in the washing machine.

DISPOSAL

Packaging is made of environmentally friendly materials that can be recycled, disposed of, or destroyed without any hazard to the environment. To this end, packaging materials are labelled appropriately.



The symbol on the product or its packaging indicates that the product should not be treated as normal household waste. Take the product to an authorized collection centre for waste electric and electronic equipment processing.

When **disposing** of the washing machine at the end of its useful life, remove all power cords, and destroy the door latch and switch to prevent the door from locking or latching (child safety).

Correct **disposal** of the product will help prevent any negative effects on the environment and health of people, which could occur in case of incorrect product removal. For detailed information on removal and processing of the product, please contact the relevant municipal body in charge of waste management, your waste disposal service, or the store where you bought the product.

PROGRAM DURATION AND SPINNING RATE TABLE

Programmes		Temp. [°C]	**NORMAL**CARE (basic/default setting) Washing time [minutes]	**SPIN** (SPINNING RATE) [rpm]
	Cotton black	40	62	** 1000
		30	59	
	Cotton color	60	182	* 1200
		40	192	
		30	106	
		20	97	
		--	94	
	Cotton white	90	200	* 1200
		60	174	
		40	184	
	Mix (Mixed laundry/Synthetics)	60	129	** 1000
		40	117	
		30	114	
		20	63	
		--	59	
	Wool/Handwash	40	50	** 800
		30	49	
		--	37	
	Speed 20´	30	20	** 1000
	Power 59´	40	59	** 1200
	Steril tub (Self-cleaning programme)	--	112	-
	Rinse/Softening (Partial programme)	--	32	* 1200
	Spin/Drain (Spinning rate/ Drain) (Partial programme)	--	17	* 1200

* Spinning rate can be changed, and the newly set rate can be up to the maximum rate
** Depending on the model
⊂ Standard programme
-- Cold wash

Programmes		Temp. [°C]	**NORMAL**CARE (basic/default setting)	**SPIN** (SPINNING RATE)
			Washing time [minutes]	**[rpm]**
	Sports (Sportswear)	40	41	** 1000
		30	39	
	Down wear	40	56	** 800
		30	53	
		20	44	
	Allergy care	90	143	* 800
		60	118	
		40	98	
	Auto wash	30	93	* 1200

* Spinning rate can be changed, and the newly set rate can be up to the maximum rate
** Depending on the model
⏀ Standard programme
-- Cold wash

Low water temperature, low mains voltage and different washing loads may affect the washing time; the remaining time displayed is adjusted accordingly during the washing process.

TYPICAL CONSUMPTION TABLE

Programme Cotton	Max. load [kg]	Temp. [°C]	Spinning [rpm]	Residual moisture [%]	Time [min.]	Water consumption [L]	Power consumption [kWh]
430 mm							
A+++ ECO* ⊂	6/3**	60	1000-1400	59-53	214/175	49	0,74/0,62**
A+++ ECO* ⊂	6/3**	40	1000-1400	59-53	195/171	49	0,55/0,47**
465 mm							
A+++ (-10%) ECO* ⊂	7/3,5**	60	1000-1400	59-53	214/175	49	0,79/0,66**
A+++ (-10%) ECO* ⊂	7/3,5**	40	1000-1400	59-53	195/171	49	0,65/0,56**
A+++ ECO* ⊂	7/3,5**	60	1000-1400	59-53	214/175	51	0,81/0,70**
A+++ ECO* ⊂	7/3,5**	40	1000-1400	59-53	195/171	51	0,65/0,59**
545 mm							
A+++ (-20%) ECO* ⊂	8/4**	60	1000-1600	59-44	214/175	54	0,80/0,66**
A+++ (-20%) ECO* ⊂	8/4**	40	1000-1600	59-44	195/171	54	0,60/0,56**
A+++ (-10%) ECO* ⊂	8/4**	60	1000-1600	59-44	214/175	54	0,80/0,76**
A+++ (-10%) ECO* ⊂	8/4**	40	1000-1600	59-44	195/171	54	0,75/0,70**
A+++ (-10%) ECO* ⊂	7/3,5**	60	1000-1600	59-44	214/175	49	0,78/0,66**
A+++ (-10%) ECO* ⊂	7/3,5**	40	1000-1600	59-44	195/171	49	0,65/0,58**
A+++ ECO* ⊂	8/4**	60	1000-1600	59-44	214/175	54	0,90/0,85**
A+++ ECO* ⊂	8/4**	40	1000-1600	59-44	195/171	54	0,75/0,70**

* Test programme pursuant to EN 60456 with maximum spinning rate
** Half load

Cotton 40°C ECO ⊂ and 60°C ECO ⊂ are standard programmes to which the data on the energy label pertains. These programmes are suitable for normally soiled laundry, and they are the most efficient programmes in terms of water and power consumption. Therefore, actual water temperature may differ from the nominal cycle temperature.

Programme Cotton	Max. load [kg]	Temp. [°C]	Spinning [rpm]	Residual moisture [%]	Time [min.]	Water consumption [L]	Power consumption [kWh]
610 mm							
A+++ (-20%) ECO* ⊂	9/4,5**	60	1000-1600	59-44	214/175	57	0,82/0,78**
A+++ (-20%) ECO* ⊂	9/4,5**	40	1000-1600	59-44	195/171	57	0,75/0,70**
A+++ (-20%) ECO* ⊂	8/4**	60	1000-1600	59-44	214/175	55	0,80/0,66**
A+++ (-20%) ECO* ⊂	8/4**	40	1000-1600	59-44	195/171	55	0,60/0,56**
A+++ ECO* ⊂	9/4,5**	60	1000-1600	59-44	214/175	57	1,10/0,95**
A+++ ECO* ⊂	9/4,5**	40	1000-1600	59-44	195/171	57	0,80/0,76**

* Test programme pursuant to EN 60456 with maximum spinning rate
** Half load

Cotton 40°C ECO ⊂ and 60°C ECO ⊂ are standard programmes to which the data on the energy label pertains. These programmes are suitable for normally soiled laundry, and they are the most efficient programmes in terms of water and power consumption. Therefore, actual water temperature may differ from the nominal cycle temperature.

Maximum or nominal load applies to laundry prepared pursuant to the IEC 60456 standard.

Due to deviations in terms of type and amount of laundry, spinning, power supply oscillation, and environment temperature and humidity, the programme duration and power consumption values measured at the end user may differ from the ones stated in the table.

679870

LOW STANDBY MODE

If you do not run any program or choose any settings after switching on the washing machine (1) **ON**/OFF/RESET button (1)), the display unit will be switched off after 5 minutes and switched to stand-by mode in order to save energy.
The display unit will be reactivated if you rotate the programme selector knob (2) or press the (1) ON/OFF/RESET button. In some models, the light inside the washing machine drum will also be lit.
If you do not do anything for 5 minutes after the end of a programme, the display unit and the light in the drum will be switched off to save power.

P o = weighted power when off [W]	< 0,5
P l = weighted power when in standby [W]	< 0,5
T l = standby time [min]	5,00

We reserve the right to any changes and errors in the instructions for use.


ENERG
енергия · ενεργεια
Y
IJA
IE
IA
XXXXXX
A+++
A++
A+
A
B
C
D
X
ENERGIA · ЕНЕРГИЯ · ΕΝΕΡΓΕΙΑ
ENERGIJA · ENERGY · ENERGIE
ENERGI
XXX
kWh/annum
XXXX
L/annum
kg
X
kg
Xxxxxx
XX dB
XX dB
2010/1061

PRODUCT FICHE pursuant to EC Regulation No. 1061/2010

Legend

A	**Model**	XXXXXX
B	»EU Ecolabel«, Regulation EC 66/2010	YES=YES; NO=NO
C	Energy consumption for the standard cotton programme ($E_{t,60}$, $E_{t,60½}$, $E_{t,40½}$) [kWh]	X,XX/ X,XX/ X,XX
D	Weighted power when off and when in left-on (standby) mode [W]	X,XX/ X
E	Maximum spinning rate (rpm)	XXXX
F	Residual moisture content (%)	XX
G	Standard cotton programme at 60°C and 40°C are the two programs that the data on the label and the product fiche pertain to. These are the two most efficient programs in terms of energy and water consumption, and they are suitable for washing of normally soiled cotton laundry.	
H	Washing time for cotton on the standard program at 60°C and 40°C at full and partial load (60°C full / 60°C ½ / 40°C ½) [min]	XXX/ XXX/ XXX
I	Duration of the »left-on mode« (T_l) [min]	X
J	Noise (db(A) re 1 pW) – washing/spinning	XX/ XX
K	Built-in appliances	YES=YES; NO=NO

Based on 220 standard washing cycles for Cotton + ECO ⊂, 60°C ECO ⊂, and 40°C ECO ⊂ for full and half (partial) load in energy saving modes. Actual power consumption will depend on the way the appliance is used.

Based on 220 standard washing cycles for Cotton + ECO ⊂, 60°C ECO ⊂, and 40°C ECO ⊂ at full and half (partial) load. Actual water consumption will depend on the way the appliance is used.

On a scale from D (the least efficient) to A+++ (the most efficient).

Gorenje Asia (Shanghai) Limited Company
Address: Unit B/2F Building A, Synnex International Park,
No. 1068 West Tianshan Road
Service number: 400 808 8899
Service mailbox: service.cn@gorenje.com
Website: www.gorenjechina.com

PS15 L1 ADVANCED

679870

en (01-20)