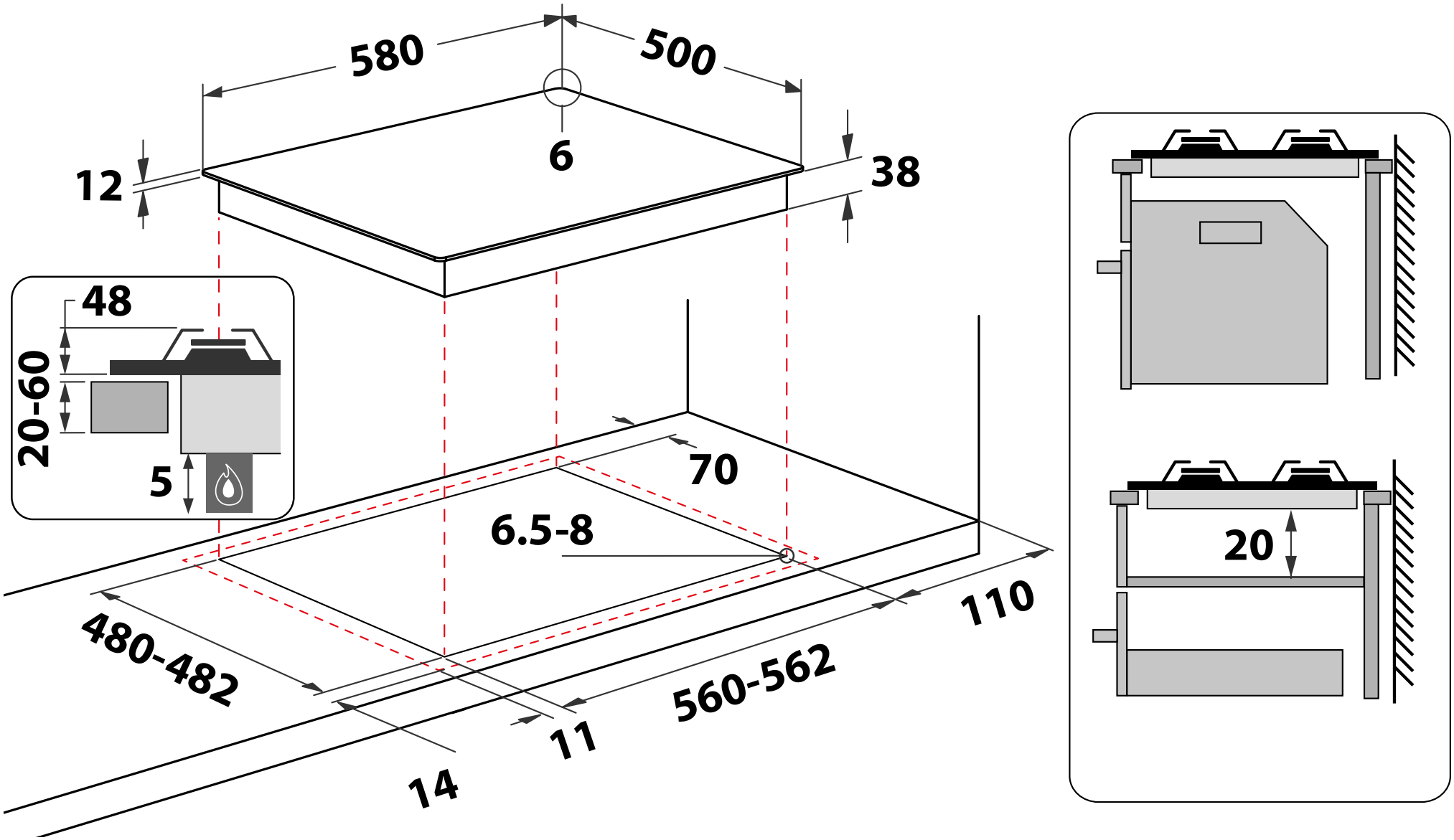
580
500
6
12
38
48
20-60
5
70
6.5-8
480-482
560-562
110
11
14
20

PAA 642 /I(WH)

12NC/Fx: F100511

GTIN (EAN) code: 8050147005118

DIMENSION	MEASURE	
APPLIANCE		
Product width	580	mm
Product depth	500	mm
Radius of product corner	6	mm
Product height (MAX protrusion from the worktop)	48	mm
Underneath the bearing area of the appliance	38	mm
Distance between cut out and top frontal projection	14	mm
Distance between cut out and top lateral projection	11	mm
Plateau thickness	12	mm
Gas outlet positioning	Rear right	
Gas outlet X positioning	31	mm
Gas outlet Y positioning	20	mm
Power cable	With product	
Power cable positioning	Rear right	
CUT OUT		
MIN front distance from cut-out to end worktop	0	mm
MIN rear distance from cut out to wall/furniture	70	mm
MIN lateral distance from cut out to wall/furniture	110	mm
MIN height from worktop to above furniture	400	mm
MIN cut out width	560	mm
MAX cut out width	562	mm
MIN cut out depth	480	mm
MAX cut out depth	482	mm
MIN cut out radius	6.5	mm
MAX cut out radius	8	mm
FLUSH INSTALLATION		
Indicates whether a flush installation is possible. Default is "N"	No	
MIN Milling rabbet width	0	mm
MAX Milling rabbet width	0	mm
MIN Milling rabbet depth	0	mm
MAX Milling rabbet depth	0	mm
Milling rabbet thickness	0	mm
Radius milling rabbet	0	mm
Flush installation KIT (2)	N/A	
Indicates the minum worktop thickness with standard installation for gas	20	mm
Indicates the maximum worktop thickness with standard installation for gas	60	mm
Indicates the minum worktop thickness with flush installation for gas	0	mm
Indicates the maximum worktop thickness with flush installation for gas	0	mm
WITH OVEN		
Indicates whether the cooktop can be installed above oven. Default is "Y"	Yes	
MIN worktop thickness with oven	0	mm
MAX worktop thickness with oven	0	mm

DIMENSION	MEASURE	
Indicates whether a protection tray against heat or contact is needed with oven. Default is "N"	No	
Indicates whether a ventilation opening in the back side of cabinet is needed or not with oven. Default is "Y"	No	
Indicates the position of the opening in the back side of the cabinet with oven	N/A	
MIN Width of rear opening required with oven	0	mm
MIN Depth of rear opening required with oven.	0	mm
MIN AREA of rear opening required with oven	0	cm²
MIN distance from cabinet to rear wall, with oven	0	mm
Indicates whether a ventilation opening in the top front side of cabinet is needed or not with oven. Default is "N"	No	
MIN Frontal gap required, with oven (2)	0	mm
MIN frontal opening area required with oven	0	cm²
WITH CABINET		
MIN worktop thickness with cabinet	0	mm
MAX worktop thickness with cabinet	0	mm
Indicates whether a protection tray against heat or contact is needed. Default is "Y"	Yes	
MIN distance from bottom line of appliance to protection tray	20	mm
Indicates whether a ventilation opening in the tray is needed or not with cabinet	No	
Recess dimension X	0	mm
Recess dimension Y	0	mm
Positioning dimension X by axis	0	mm
Distance of the tray from the back panel/wall	0	mm
Indicates whether a divider is available	N/A	
Indicates whether a ventilation opening in the back side of cabinet is needed or not. Default is "Y"	No	
Indicates the position of the opening in the back side of the cabinet.	N/A	
MIN Width of rear opening of the cabinet	0	mm
MIN Depth of rear opening of the cabinet	0	mm
MIN AREA of rear opening of the cabinet	0	cm²
MIN distance from cabinet to rear wall	0	mm
Indicates whether a ventilation opening in the top front side of cabinet is needed or not. Default is "N"	No	
MIN Frontal gap of the cabinet	0	mm
MIN frontal opening area of the cabinet	0	cm²
INSTALLATION SPACE		
Depth of immersion underneath the appliance	5	mm
Width protruding area below bottom box	80	mm
Depth protruding area below bottom box	72	mm
Protruding area: X positioning	10	mm
Protruding area: Y positioning	3	mm
ACCESSORIES FOR INSTALLATION		
Gasket	Separate KIT	
Clips	Separate	

DIMENSION	MEASURE	
	KIT	
Injector KIT	Separate KIT	
Elbow KIT	N/A	
COOKTOP HOOD INSTALLATION ONLY FOR GAS		
MIN distance from cooktop to above furniture	750	mm
MIN distance between cabinets above the cooktop	600	mm
MAX distance between cabinets above the cooktop	750	mm