Hotpoint

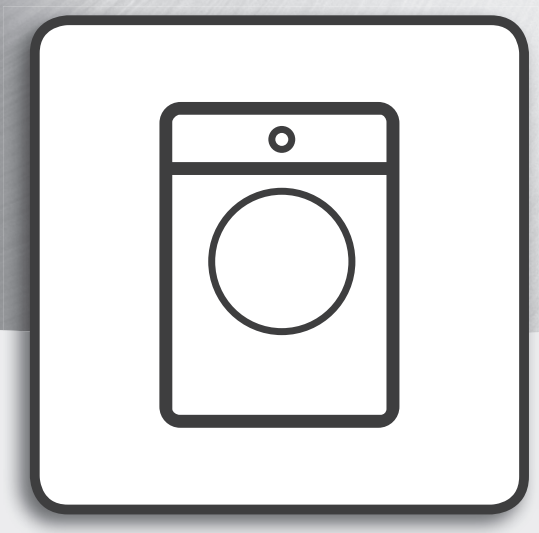

User Manual

www.hotpoint.eu/register

THANK YOU FOR PURCHASING A HOTPOINT PRODUCT.

To receive more comprehensive assistance, register the appliance on
www.hotpoint.eu/register

Before using the appliance carefully read the Health and Safety guide.

Before using the machine, it is imperative that the transport bolts are removed. For more detailed instructions on how to remove them, see the Installation Guide.

CONTROL PANEL

1. STEAM HYGIENE button
2. RAPID / KEY LOCK button
3. ON/OFF button
4. START/PAUSE button
5. FINAL CARE button
6. START DELAY button
7. SPIN button
8. TEMPERATURE button
9. WASH CYCLE SELECTOR KNOB

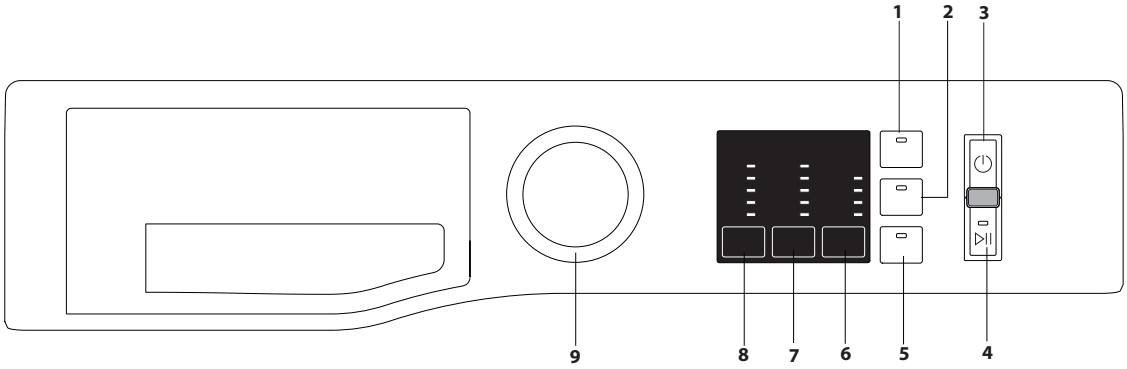

WASH CYCLE TABLE

Maximum load 9 kg
Power input in off mode 0.5 W / in left-on mode 8 W

	Wash cycle	Temperature		Max. spin speed (rpm)	Max. load (kg)	Duration (minutes)	Add Garments	Detergents and Additives			Recommended detergent		Residual dampness %	Energy consumption kWh	Total water l
		Default	Range					Pre-wash 1	Wash 2	Fabric softener 3	Powder	Liquid			
1	**Mixed**	40°C	❄ - 40°C	1400	9	115	●	–	●	○	–	✔	–	–	–
2	**Eco Cotton (1)**	60°C	60°C	1400	9	250	●	–	●	○	✔	✔	53	1,03	57,5
			40°C	1400	9	235	●	–	●	○	✔	✔	53	1,24	94
3	**Cotton (2)**	40°C	❄ - 60°C	1400	9	235	●	–	●	○	✔	✔	53	1,24	94
4	**Synthetics (3)**	40°C	❄ - 60°C	1200	4,5	175	●	–	●	○	✔	✔	53	0,54	68
5	**Delicates**	40°C	❄ - 40°C	1000	4,5	95	●	–	●	○	–	✔	–	–	–
6	**Wool**	40°C	❄ - 40°C	800	2	85	●	–	●	○	–	✔	–	–	–
7	**Anti Allergy**	60°C	40°C - 60°C	1400	5	190	●	–	●	○	✔	✔	–	–	–
8	**Anti Stain 40°**	40°C	❄ - 40°C	1000	4,5	60	●	–	●	○	✔	✔	–	–	–
9	**White**	40°C	❄ - 90°C	1400	9	120	●	●(90°)	●	○	✔	✔	–	–	–
10	**Steam Refresh**	–	–	–	2	20	–	–	–	–	–	–	–	–	–
11	**Rapid 30 min**	30°C	❄ - 30°C	800	4,5	30	●	–	●	○	–	✔	–	–	–
12	**Bed & Bath**	60°C	❄ - 60°C	1400	9	140	●	–	●	○	✔	✔	–	–	–
13	**Shirts**	40°C	❄ - 40°C	800	2	80	●	–	●	○	–	✔	–	–	–
14	**Spin & Drain ***	–	–	1400	9	10	–	–	–	–	–	–	–	–	–
15	**Rinse & Spin**	–	–	1400	9	55	–	–	–	○	–	–	–	–	–

● Required dosage ○ Optional dosage

The cycle duration indicated on the display or instruction manual is an estimate based on standard conditions. The actual duration may vary in relation to several factors, such as the temperature and pressure of the incoming water, ambient temperature, amount of detergent, load quantity and type, load balancing and any additional options selected.

1) Test wash cycle in compliance with regulation 1061/2010:
This cycle is designed for normally soiled cotton loads and is the most efficient in terms of both electricity and water consumption; it should be used for garments washable at 60°C or at 40°C. The actual washing temperature may differ from the indicated value.

For all testing institutes:
2) Long cotton cycle: set wash cycle 3 with a temperature of 40°C.
3) Long synthetics cycle: set wash cycle 4 with a temperature of 40°C.

* By selecting the **14** cycle and excluding the spin cycle, the washing machine will drain only.

PRODUCT DESCRIPTION

1. Top
2. Detergent dispenser drawer
3. Control panel
4. Handle
5. Porthole door
6. Drain pump (behind the plinth)
7. Plinth (removable)
8. Adjustable feet (2)

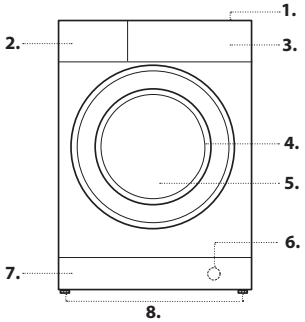

DETERGENT DISPENSER DRAWER

compartment 1: Pre-wash detergent (powder)
compartment 2: Detergent for the wash cycle (powder or liquid)
If liquid detergent is used, it is recommended that the removable plastic partition A (supplied) be used for proper dosage.
If powder detergent is used, place the partition into slot B.
compartment 3: Additives (fabric softeners, etc.)
The fabric softener should not overflow the grid.

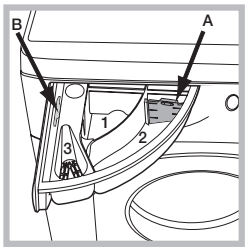

! Use powder detergent for white cotton garments, for pre-washing, and for washing at temperatures over 60°C.
! Follow the instructions given on the detergent packaging.

WASH CYCLES

Follow the instructions on the symbols of the garment's wash care label. The value indicated in the symbol is the maximum recommended temperature for washing the garment.

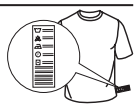

Mixed
For washing lightly to normally soiled resilient garments in cotton, linen, synthetic fibres and mixed fibres.

Eco Cotton 60°/40°
Suitable for washing moderately soiled cotton garments. At 40°C and 60°C it is the standard cycle for washing cotton garments, and is the most efficient in terms of combined water and electricity consumption.

Cotton
Normally to heavily soiled and robust cottons .

Synthetics
Suitable for washing moderately soiled garments made of synthetic fibres (e.g. polyester, polyacrylic, viscose, etc.) or mixed synthetic-cotton fibres.

Delicates
For washing very delicate garments. It is advisable to turn the garments inside out before washing them. For best results, use liquid detergent on delicate garments.

Wool - Woolmark Apparel Care - Green:
The "Wool" wash cycle is approved by the Woolmark Company for washing wool garments classified as "hand-washable", provided that the wash complies with the instructions appearing on the garment's label and with those provided by the manufacturer of this washing machine. (M1127)



In UK, Eire, Hong Kong and India the Woolmark trade mark is a Certification trade mark.

Anti Allergy
Suitable for removing major allergens such as pollen, mites and cat or dog hair.

Anti Stain 40°
The programme is suitable to heavily-soiled garments with resistant colours. It ensures a washing class that is higher than the standard class (A class). When running the programme, do not mix garments of different colours. We recommend the use of powder detergent. Pre-treatment with special additives is recommended if there are obstinate stains.

White
For washing normally to heavily soiled towels, underwear, table and bed linen, etc in resilient cotton and linen. Only when the temperature is selected at 90°C the cycle is provided with a prewash phase before main washing phase. In this case it is recommended to add detergent both, in the prewash and main wash section.

Steam Refresh
The garments will be damp once the cycle is completed, so we recommend hanging them to dry (2 kg, roughly 3 items).
This programme refreshes garments by removing bad odours and relaxing the fibres. Insert dry items only (that are not dirty) and select programme "**Steam Refresh**". Garments will be a little damp at the end of the cycle and can be worn after a few minutes. The "**Steam Refresh**" programme makes ironing easier.
! Do not add softeners or detergents.
! Not recommended for wool or silk garments.

Rapid 30 min
For washing lightly soiled garments quickly. This cycle lasts only 30 minutes, saving time and energy.

Bed & Bath
For washing home linen in a single cycle. It optimises the use of fabric softener and allows for saving time and electricity. We recommend the use of powder detergent.

Shirts
Use the special wash cycle to wash shirts in different fabrics and colours to guarantee they receive the best possible care.

Spin & Drain
Spins the load then empties the water. For resilient garments. If you exclude the spin cycle, the machine will drain only

Rinse & Spin
Rinses and then spins. For resilient garments.

WASH CYCLE PHASE INDICATOR LIGHTS

Once the desired wash cycle has been selected and has begun, the indicator lights switch on one-by-one to indicate which phase of the cycle is currently in progress.

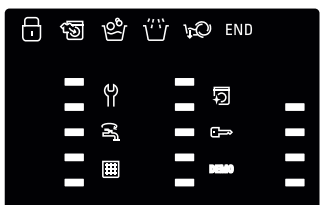

Wash
Rinse
Spin & Drain
END End of Wash Cycle

DISPLAY INDICATORS
Failure: Call Service
Refer to Troubleshooting section
Failure: Water filter clogged
Water cannot be drained; water filter might be blocked
Failure: No water
No or not sufficient inlet water.
In the event of any failure, refer to the "Troubleshooting" section.

CHILD LOCK

to activate the control panel lock, press and hold the button for approximately 3 seconds. The lit symbol signals that the control panel is locked. This prevents wash cycles from being modified accidentally (except for the ON/OFF button), especially if there are children in the home. To deactivate the control panel lock, press and hold the button for approximately 3 seconds.

Locked door indicator
When lit, the symbol indicates that the door is locked. To prevent any damage, wait until the symbol turns off before opening the door.
To open the door while a cycle is in progress, press the START/PAUSE button if the symbol is off, the door can be opened.

FIRST-TIME USE

Once the appliance has been installed, and before you use it for the first time, run a wash cycle with detergent and no laundry, using the wash cycle **9 (60°)**.

DAILY USE

Prepare the laundry by following the suggestions appearing under the "TIPS AND SUGGESTIONS" section.
- Press the ON/OFF button.
- Open the door. Load the laundry while making sure not to exceed the maximum load quantity indicated in the wash cycle table.
- Pull out the detergent dispenser drawer and pour the detergent into the relevant compartments, as described in the "DETERGENT DISPENSER DRAWER" section.
- Close the door.
- Modify the temperature and/or spin.
- Select the desired wash cycle.
- Select the desired options.
- Press the START/PAUSE button to start the wash cycle; the relative indicator light will light up steady and the door will lock (symbol on).

PAUSING A CYCLE

To pause the wash cycle, press the START/PAUSE button again; the indicator light will flash. To start the wash cycle from the point at which it was interrupted, press the START/PAUSE button again.

OPENING THE DOOR, IF NECESSARY

Once a cycle starts, the symbol turns on to signal that the door cannot be opened. While a wash cycle is running, the door remains locked. To open the door while a cycle is under way, for example, to add or remove garments, press the START/PAUSE button to pause the cycle; the indicator light will flash. If the symbol is not lit, the door may be opened. Press the START/PAUSE button again to continue the cycle.

ADDING GARMENTS

An icon on the display will signal when additional garments can be introduced into the washing machine, without decreasing the washing performance. To add garments, first stop the washing machine by pressing the START/PAUSE button then open the door and insert them.
Press the START/PAUSE button again to restart the wash cycle from the point at which it was interrupted.

CHANGING A RUNNING WASH CYCLE

To change a wash cycle while it is in progress, pause the washing machine using the START/PAUSE button (the relative indicator light will flash), then select the desired cycle and press the START/PAUSE button again.
! To cancel a cycle that has already begun, press and hold the ON/OFF button. The cycle will be stopped and the machine will switch off.

AT THE END OF THE WASH CYCLE

Once the cycle terminates the **END** indicator light will light up; when the indicator light switches off, the door may be opened. Open the door, unload the laundry and switch off the machine. If you do not press ON/OFF button, the washing machine will switch off automatically after about 15 minutes.

OPTIONS

- If the selected option is not compatible with the set wash cycle, the indicator light will flash accompanied by a buzzer and the option will not be activated.
- If the selected option is not compatible with another previously selected option, the indicator light will flash accompanied by a buzzer and the option will not be activated.

Steam Hygiene
This option enhances washing performance by generating steam during the wash cycle to remove any bacteria from the fibres, which are treated at the same time. Place the laundry in the drum, choose a compatible programme and select option Steam Hygiene.
! The steam generated during the operation of the washing machine may cause the porthole door to become hazy.

Rapid
Rapid: selecting this option allows for reducing the wash cycle duration depending on the selected cycle, thus guaranteeing both water and energy saving. Use this cycle for lightly soiled garments.

Final Care
The washing machine will perform gentle tumbling through slow rotations of the drum. Final Care option starts after the cycle ends for a maximum duration of 6h and you can interrupt at any time by pressing any button on control panel or turning the knob.

Delay start
To set a delayed start for the selected cycle, press the corresponding button repeatedly until the desired delay period has been reached (1h-3h-6h-9h). When the button is pressed for the fifth time, the option will deactivate.
Once the START/PAUSE button has been pressed, the delay time can only be modified by decreasing it until the set cycle is launched.

Temperature
Each wash cycle has a pre-defined temperature. To modify the temperature, press the button.

Spin
Each wash cycle has a pre-defined spin speed. To modify the spin speed, press the button.

DESCALE AND CLEAN PROCEDURE

An icon on the display will regularly (roughly every 50 cycles) remind users that is time to run a maintenance cycle to clean the washing machine and combat limescale build-up and bad odours.
To delete the descale alert turn the knob or push any button (including ON/OFF button).
For optimal maintenance we suggest using WPRO Limescale and grease remover, according to the instructions shown on the package. The product can be purchased by contacting the technical assistance service or through the website www.whirlpool.eu.
Whirlpool declines all liability for any damages to the appliance caused by the use of other cleaning products for washing machines available on the market.

TIPS AND SUGGESTIONS

Divide the laundry according to:
Type of fabric (cotton, mixed fibres, synthetics, wool, garments to be hand-washed). Colour (separate coloured garments from whites, wash new coloured garments separately). Delicates (small garments – such as nylon stockings – and items with hooks – such as bras: insert them in a fabric bag).

Empty the pockets:
Objects such as coins or lighters can damage the washing machine and the drum. Check all buttons.

CARE AND MAINTENANCE

Before performing cleaning and maintenance, switch the washing machine off and disconnect it from the mains power. Do not use flammable liquids to clean the washing machine.

Cutting off the water and electricity supplies
Close the water tap after every wash. This will limit wear on the hydraulic system inside the washing machine and help to prevent leaks.
Unplug the washing machine when cleaning it and during all maintenance work.

Cleaning the washing machine
The outer parts and rubber components of the appliance can be cleaned using a soft cloth soaked in lukewarm soapy water. Do not use solvents or abrasives.

Caring for the door and drum
Always leave the porthole door ajar in order to prevent unpleasant odours from forming.

Checking the water inlet hose
Check the water inlet hose at least once a year. If it is cracked or broken, it must be replaced: during wash cycles, the high pressure of the water could suddenly split the hose open.
! Never use hoses that have already been used.

ANTIMICROBIAL SEAL

The seal around the porthole door is made from a special mixture ensuring antimicrobial protection, thus reducing bacterial proliferation up to 99.99%.
The seal contains zinc pyrithione, a biocidal substance which reduces the proliferation of harmful microbes (*) such as batteries and mould prone to causing stains, unpleasant odours and product deterioration.
(*) According to tests performed by the University of Perugia, Italy on: Staphylococcus aureus, Escherichia coll, Pseudomonas aeruginosa, Candida albicans, Aspergillus niger, Penicillium digitatum
In rare cases an allergic reaction may be caused by prolonged contact between seal and skin.

ACCESSORIES

Contact our Technical Assistance Service to check whether the following accessories are available for this washing machine model.

Stacking kit
With this accessory you can secure the tumble dryer to the upper part of your washing machine to save space and facilitate loading and unloading of the tumble dryer.

TRANSPORT AND HANDLING

Do not lift the washing machine by gripping it from the upper section.
Unplug the appliance and close the water tap. Check that the door and detergent dispenser drawer are tightly closed. Detach the filling hose from the water tap then detach the drain hose. Empty all the water remaining in the hoses and secure the latter so that they do not get damaged during transport. Apply the transport bolts back on. Repeat, in reverse order, the transport bolt removal procedure described in the "Installation instructions".

TROUBLESHOOTING

Your washing machine could occasionally fail to work. Before contacting the Technical Assistance Service, make sure that the problem cannot be easily solved using the following list.

Anomalies	Possible causes / Solution
The washing machine does not start.	The appliance is not plugged into the socket fully, or not enough to make contact.
	There is no power in the house.
The wash cycle does not start.	The washing machine door is not closed properly.
	The ON/OFF ⏻ button has not been pressed.
	The START/PAUSE ▷II button has not been pressed.
	The water tap has not been opened.
	A delay has been set for the start time.
	The Demo Mode is active (see below how to deactivate).
The machine does not fill with water or the indicator light for the first wash cycle stage flashes rapidly.	The water inlet hose is not connected to the tap.
	The hose is bent.
	The water tap has not been opened.
	There is no water supply in the house.
	The pressure is too low.
	The START/PAUSE ▷II button has not been pressed.
The washing machine continuously loads and unloads water.	The drain hose is not fitted between 65 and 100 cm from the floor.
	The free end of the hose is immersed in water.
	The wall drainage system is not fitted with a breather pipe. If the problem persists even after these checks, turn off the water tap, switch the appliance off and contact the Technical Assistance Service. If the home is on one of the upper floors of a building, there may be problems relating to back-siphonage, causing the washing machine to fill with water and drain continuously. Special anti-siphon valves are available in shops and help to prevent this inconvenience.
The washing machine does not drain or spin. ▦	Clean the pump filter (see Care and maintenance chapter)
	The drain hose is bent.
	The drainage duct is clogged.
The washing machine vibrates a lot during the spin cycle.	Transport bolts have been not removed correctly during installation.
	The washing machine is not leveled.
	The washing machine is tucked between furniture cabinets and the wall.
The washing machine leaks.	The water inlet hose is not screwed on properly.
	The detergent dispenser drawer is obstructed.
	The drain hose is not properly attached.
The Service 🔧 blinks.	Switch off the machine and unplug it, wait for approximately 1 minute and then switch it back on again. If the problem persists, contact the Technical Assistance Service.
There is too much foam.	The detergent is not suitable for machine washing (it should display the text "for washing machines" or "hand and machine wash", or the like).
	Too much detergent was used.
"↕" phase icon blinks, "0" spin speed displayed .	Unbalance of laundry load prevented spin cycle, to protect the washing machine. If you want to spin the wet laundry, add more laundry items of different sizes and start "Spin&Drain" programme. Avoid small laundry loads consisting of few big, absorbent pieces of laundry / wash different sizes of articles in one load.

Disable the DEMO MODE : The following actions must be carried out in sequence, without breaks. Switch the machine ON and then switch it OFF again. Press the START/PAUSE ▷II button until the buzzer is heard. Switch the machine on again. The "DEMO" indicator flashes and then turns OFF.

CLEANING & MAINTENANCE

For any cleaning and maintenance, switch off and unplug the washing machine.
Do not use flammable fluids to clean the washing machine.

CLEANING THE OUTSIDE OF THE WASHING MACHINE

Use a soft damp cloth to clean the outer parts of the washing machine.

Do not use glass or general purpose cleaners, scouring powder or similar to clean the control panel – these substances might damage the printing.

CHECKING THE WATER SUPPLY HOSE

Check the inlet hose regularly for brittleness and cracks. If damaged, replace it by a new hose available through our After-Sales Service or your specialist dealer.
Depending on the hose type:

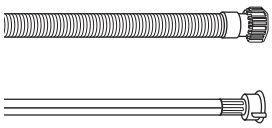

If the inlet hose has a transparent coating, periodically check if the colour intensifies locally. If yes, the hose may have a leak and should be replaced.

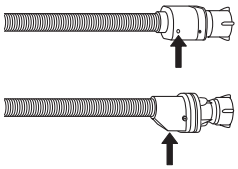

For water stop hoses: check the small safety valve inspection window (see arrow). If it is red, the water stop function was triggered, and the hose must be replaced by a new one.
For unscrewing this hose, press the release button (if available) while unscrewing the hose.

CLEANING THE MESH FILTERS IN THE WATER SUPPLY HOSE

1. Close water tap and unscrew the inlet hose.

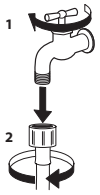

2. Clean the mesh filter at the hose's end carefully with a fine brush.

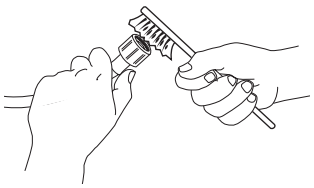

3. Now unscrew the inlet hose on the back of the washing machine by hand. Pull out the mesh filter from the valve on the back of the washing machine with pliers and carefully clean it.

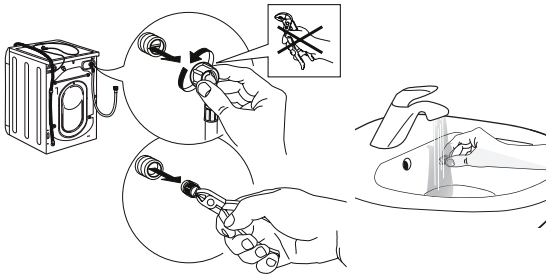

4. Insert the mesh filter again. Connect the inlet hose to water tap and washing machine again. Do not use a tool to connect the inlet hose. Open the water tap and check that all connections are tight.

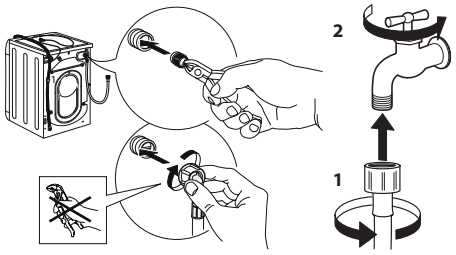

CLEANING THE DETERGENT DISPENSER

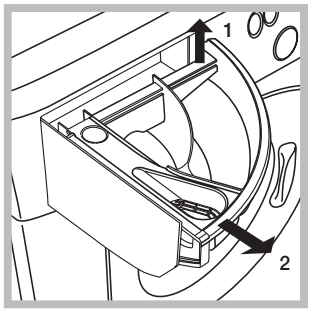

Remove the dispenser by raising it and pulling it out (see figure).
Wash it under running water; this operation should be repeated frequently.

CLEANING THE WATER FILTER / DRAINING RESIDUAL WATER

Switch off and unplug the washing machine before cleaning the water filter or draining residual water. If you used a hot wash programme, wait until the water has cooled down before draining any water.
Clean the water filter regularly, to avoid that the water cannot drain after the wash due to obstruction of the filter.
If the water cannot drain, the display indicates that the water filter may be clogged.

1. Remove the kick panel: Using a screwdriver, do that which is shown in the following figure.

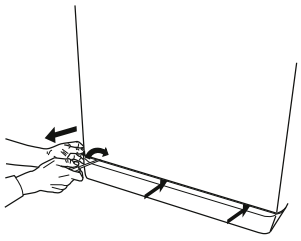

2. Container for the drained water:
Place a low and wide container under the water filter in order to collect the residual water.

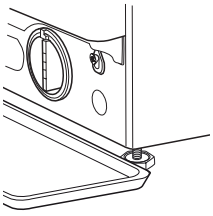

3. Drain the water:
Slowly turn the filter counter-clockwise until all the water has come out. Allow the water to flow out without removing the filter. Once the container is full, close the water filter by turning it clockwise. Empty the container. Repeat the procedure until all the water has been drained.

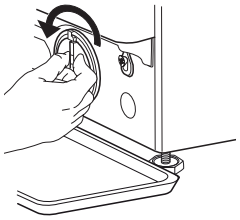

4. Remove filter: Lay a cotton cloth beneath the water filter, which can absorb a small amount of rest water. Then remove the water filter by turning it out anticlockwise.

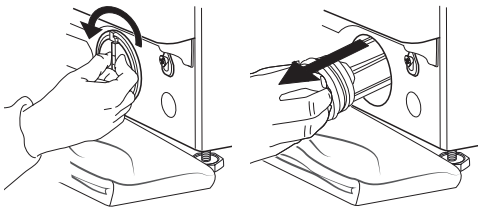

5. Clean the water filter: remove residues in the filter and clean it under running water.

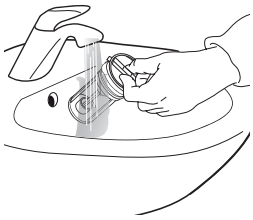

6. Insert the water filter and reinstall the plinth: Reinsert the water filter again by turning it in clockwise direction. Make sure to turn it in as far as it goes; the filter handle must be in vertical position. To test water tightness of the water filter, you can pour about 1 liter of water into the detergent dispenser. Then reinstall the plinth.

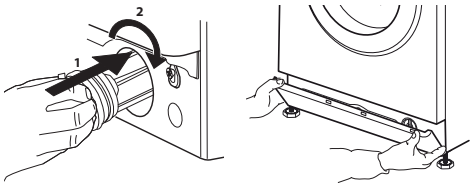

TRANSPORT AND HANDLING

Never lift the washing machine by holding it at the worktop.

1. Pull out the mains plug, and close the water tap.
2. Make sure that door and detergent dispenser are properly closed.
3. Disconnect the inlet hose from the water tap, and remove the drain hose from your draining point. Remove all rest water from the hoses, and fix them so that they cannot get damaged during transport.
4. Refit the transport bolts. Follow the instructions for removing the transport bolts in the “Installation Guide” in reverse order.

Important: Do not transport the washing machine without having fixed the transport bolts.

AFTER-SALES SERVICE

BEFORE CALLING THE AFTER-SALES SERVICE

1. See if you can solve the problem by yourself with the help of the suggestions given in the **TROUBLESHOOTING**
2. Switch the appliance off and back on again to see if the fault persists.

IF AFTER THE ABOVE CHECKS THE FAULT STILL OCCURS, GET IN TOUCH WITH THE NEAREST AFTER-SALES SERVICE

To receive assistance, call the number shown on the warranty booklet or follow the instructions on the website **www.hotpoint.eu**

When contacting our Client After sales service, always specify:

- a brief description of the fault;
- the type and exact model of the appliance;

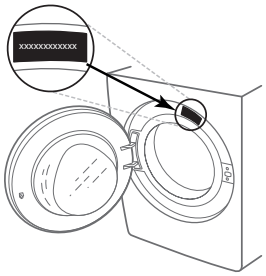

- the service number (number after the word Service on the rating plate).



- your full address;
- your telephone number.

If any repairs are required, please contact an authorised after-sales service (to guarantee that original spare parts will be used and repairs carried out correctly).

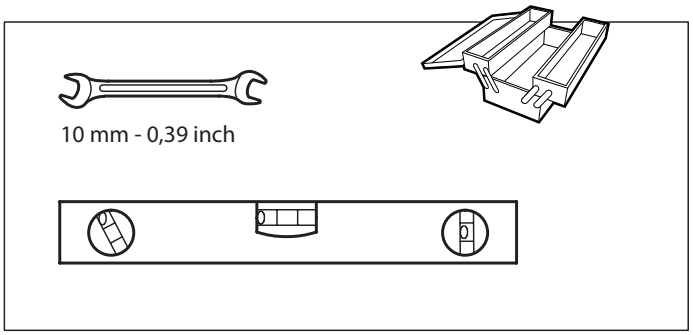

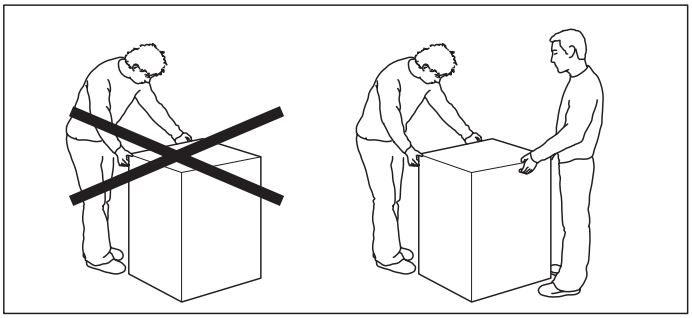

1.

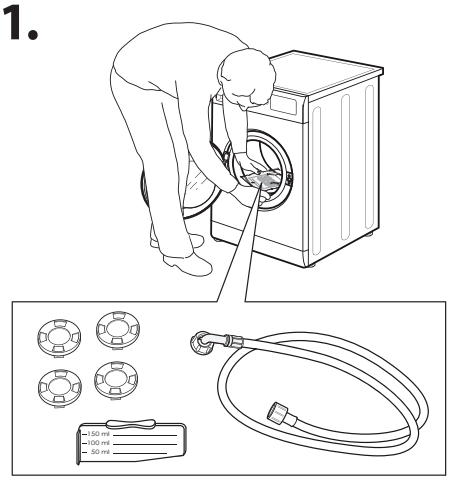

2.

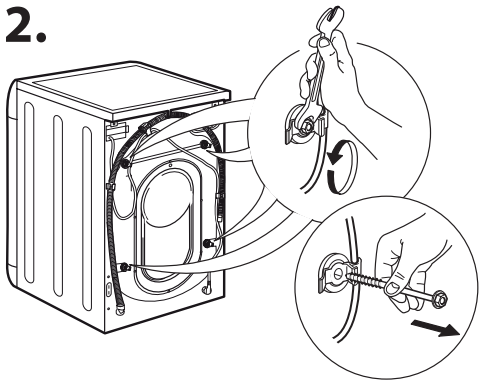

3.

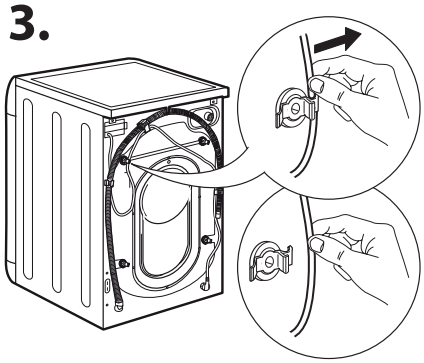

4.

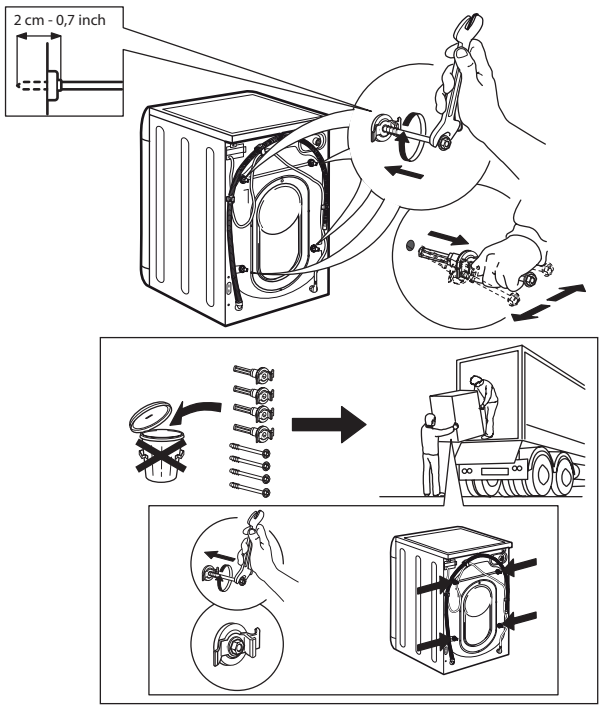

5.

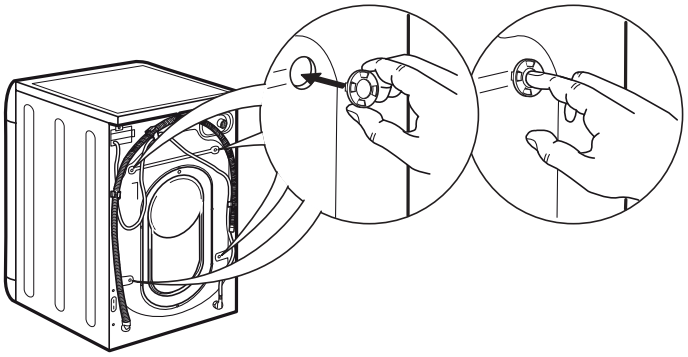

6.

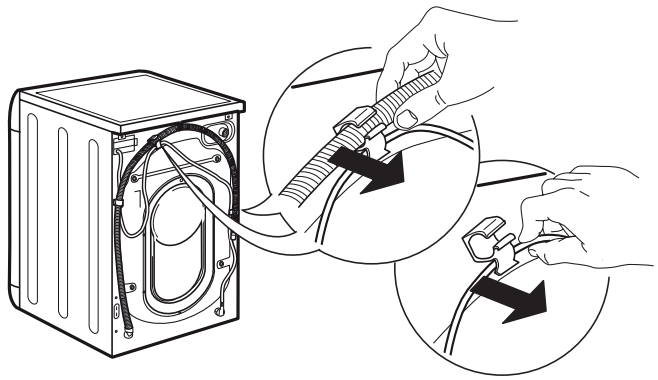

7.

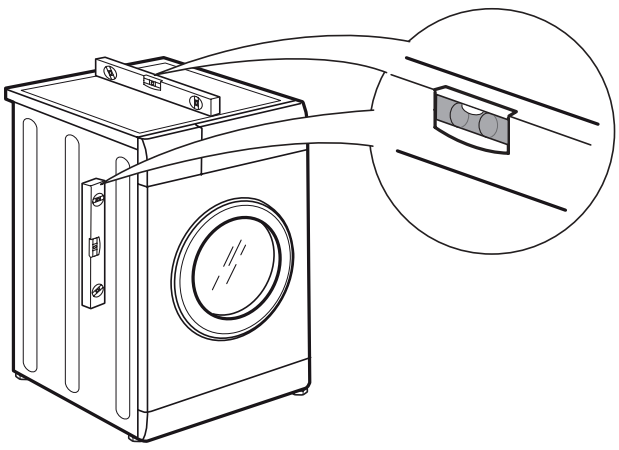

8.

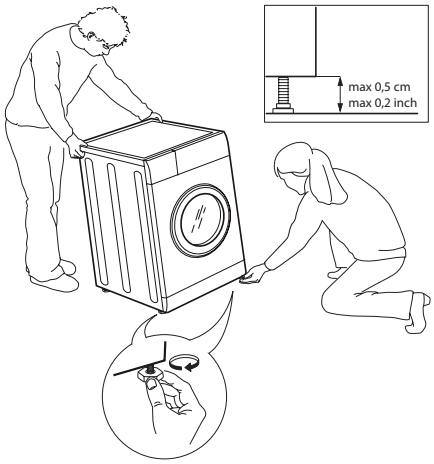

9.

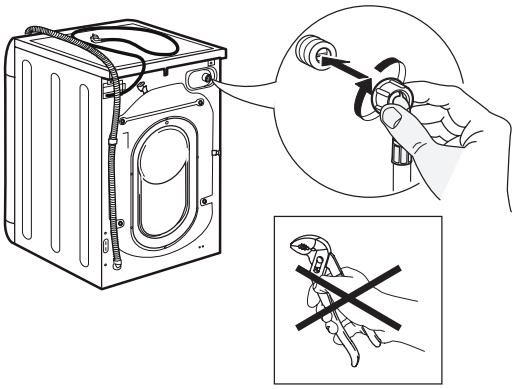

10.

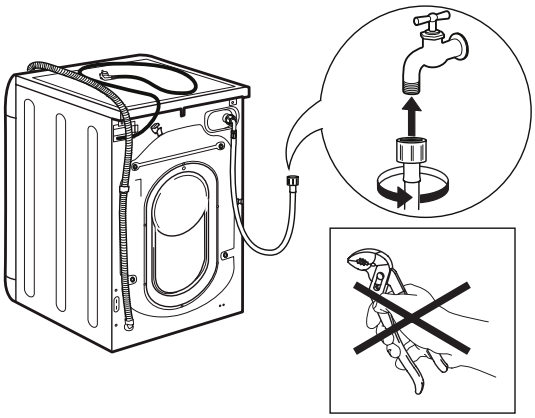

11.

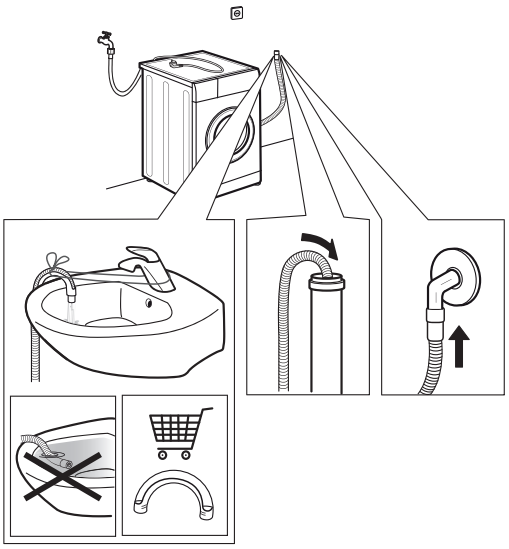

12.

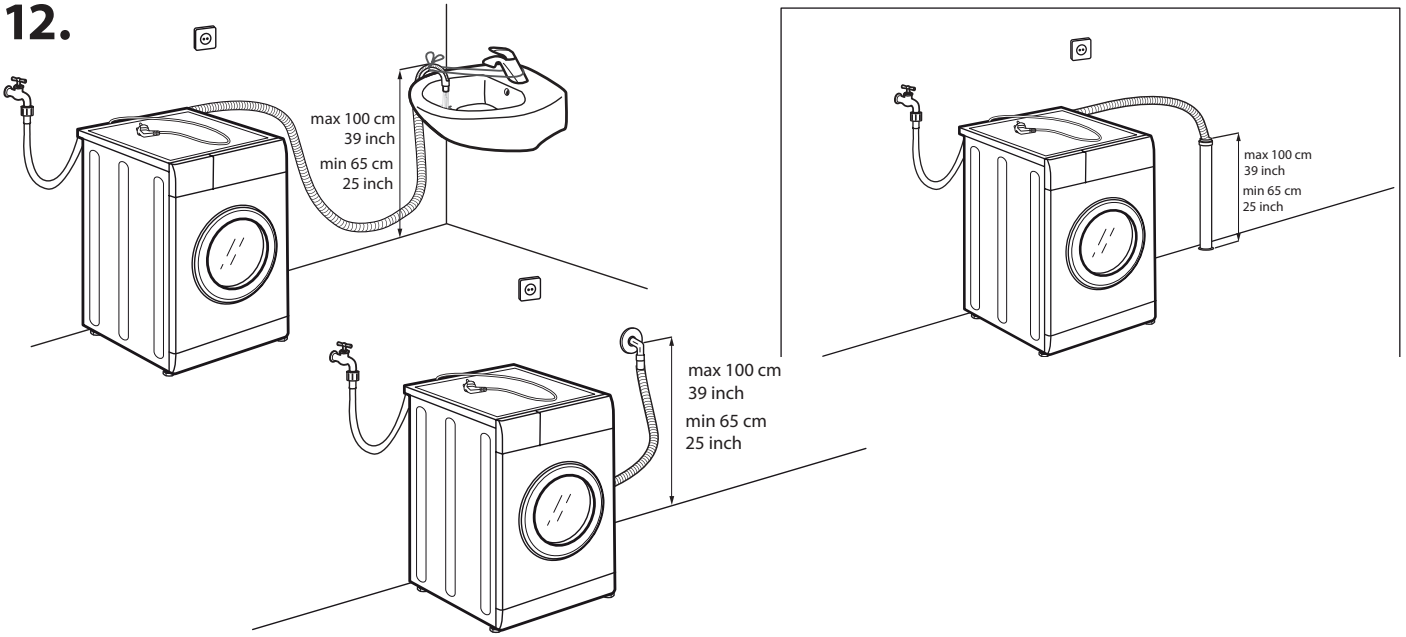

13.

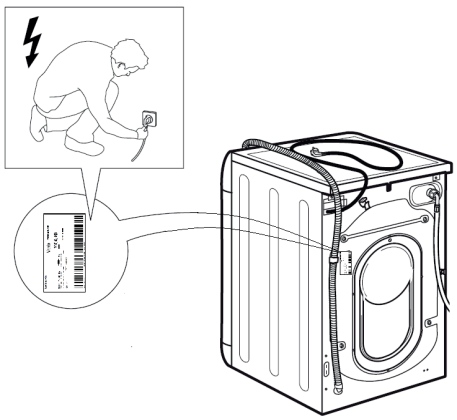

14.

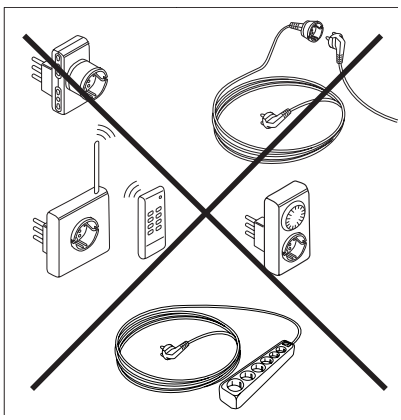

SAFETY INSTRUCTIONS

IMPORTANT TO BE READ AND OBSERVE

Before using the appliance, read these safety instructions. Keep them nearby for future reference. These instructions and the appliance itself provide important safety warnings, to be observed at all times. The manufacturer declines any liability for failure to observe these safety instructions, for inappropriate use of the appliance or incorrect setting of controls.

⚠ Very young children (0-3 years) should be kept away from the appliance. Young children (3-8 years) should be kept away from the appliance unless continuously supervised. Children from 8 years old and above and persons with reduced physical, sensory or mental capabilities or lack of experience and knowledge can use this appliance only if they are supervised or have been given instructions on safe use and understand the hazards involved. Children must not play with the appliance. Cleaning and user maintenance must not be carried out by children without supervision. Never open the door forcibly or use it as a step.

PERMITTED USE

⚠ **CAUTION:** The appliance is not intended to be operated by means of an external switching device, such as a timer, or separate remote controlled system.

⚠ This appliance is intended to be used in household and similar applications such as: staff kitchen areas in shops, offices and other working environments; farm houses; by clients in hotels, motels, bed & breakfast and other residential environments.

⚠ Do not load the machine above the maximum capacity (kg of dry cloth) indicated in the programme table.

⚠ This appliance is not for professional use. Do not use the appliance outdoors.

⚠ Do not use any solvents (e.g. turpentine, benzene), detergents containing solvents, scouring powder, glass or general purpose cleaners, or flammable fluids; do not machine wash fabrics that have been treated with solvents or flammable liquids.

INSTALLATION

⚠ The appliance must be handled and installed by two or more persons - risk of injury. Use protective gloves to unpack and install - risk of cuts.

If you want to stack a dryer on top of your washing machine, first contact our After-Sales Service or your specialist dealer to verify whether this is possible. This is only possible if the dryer is attached to the washing machine by means of appropriate stacking kit available through our After- Sales Service or your specialist dealer.

⚠ Move the appliance without lifting it by the worktop or top lid.

⚠ Installation, including water supply (if any) and electrical connections and repairs must be carried out by a qualified technician. Do not repair or replace any part of the appliance unless specifically stated in the user manual. Keep children away from the installation site. After unpacking the appliance, make sure that it has not been damaged during transport. In the event of problems, contact the dealer or your nearest After-sales Service. Once installed, packaging waste (plastic, styrofoam parts etc.) must be stored out of reach of children - risk of suffocation. The appliance must be disconnected from the power supply before any installation operation - risk of electric shock. During installation, make sure the appliance does not damage the power cable - risk of fire or electric shock. Only activate the appliance when the installation has been completed.

⚠ Do not install your appliance where it may be exposed to extreme conditions, such as: poor ventilation, temperatures below 5 °C or above 35 °C.

⚠ When installing the appliance make sure that the four feet are stable and resting on the floor, adjusting them as required, and check that the appliance is perfectly to level using a spirit level.

⚠ If the appliance is being installed on wood or “floating” floors (certain parquet and laminate materials), secure a 60 x 60 x 3 cm (at least) sheet of plywood to the floor then place the appliance on top of this.

⚠ Connect the water inlet hose(s) to the water supply in accordance with the regulations of your local water company.

⚠ For cold fill only models: do not connect to the hot water supply.

⚠ For models with hot fill: the hot water inlet temperature must not exceed 60 °C.

⚠ The washing machine is fitted with transport bolts to prevent any possible damage to the interior during transport. Before using the machine, it is imperative that the transport bolts are removed. After their removal, cover the openings with the 4 enclosed plastic caps.

⚠ After installation of the device, wait a few hours before starting it so that it acclimates to the environmental conditions of the room.

⚠ Make sure that the ventilation openings in the base of your washing machine (if available on your model) are not obstructed by a carpet or other material.

⚠ Use only new hoses to connect the appliance to the water supply. The old hose-sets should not be reused.

⚠ The supply water pressure must be in the 0.1-1 Mpa range.

ELECTRICAL WARNINGS

⚠ It must be possible to disconnect the appliance from the power supply by unplugging it if plug is accessible, or by a multi-pole switch installed upstream of the socket in accordance with the wiring rules and the appliance must be earthed in conformity with national electrical safety standards.

⚠ Do not use extension leads, multiple sockets or adapters. The electrical components must not be accessible to the user after installation. Do not use the appliance when you are wet or barefoot. Do not operate this appliance if it has a damaged power cable or plug, if it is not working properly, or if it has been damaged or dropped.

⚠ If the supply cord is damaged, it must be replaced with an identical one by the manufacturer, its service agent or similarly qualified persons in order to avoid a hazard - risk of electric shock.

CLEANING AND MAINTENANCE

⚠ WARNING: Ensure that the appliance is switched off and disconnected from the power supply before performing any maintenance operation; never use steam cleaning equipment - risk of electric shock.

DISPOSAL OF PACKAGING MATERIALS

The packaging material is 100% recyclable and is marked with the recycle symbol ♻.

The various parts of the packaging must therefore be disposed of responsibly and in full compliance with local authority regulations governing waste disposal.

DISPOSAL OF HOUSEHOLD APPLIANCES

This appliance is manufactured with recyclable or reusable materials. Dispose of it in accordance with local waste disposal regulations. For further information on the treatment, recovery and recycling of household electrical appliances, contact your local authority, the collection service for household waste or the store where you purchased the appliance. This appliance is marked in compliance with European Directive 2012/19/EU, Waste Electrical and Electronic Equipment (WEEE). By ensuring this product is disposed of correctly, you will help prevent negative consequences for the environment and human health.

The symbol  on the product or on the accompanying documentation indicates that it should not be treated as domestic waste but must be taken to an appropriate collection center for the recycling of electrical and electronic equipment.

