HSFO 3T223 W UK

12NC: F155398

GTIN (EAN) code: 5054645553983

Hotpoint



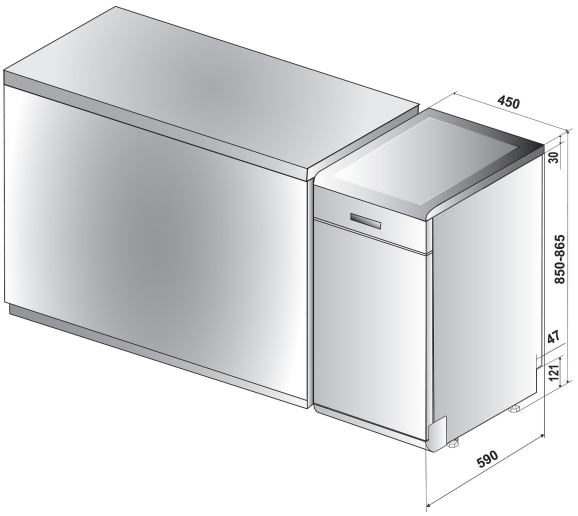

MAIN FEATURES

Construction type	Free-standing
Installation type	Free-standing
Type of control	Electronic
Type of control settings	-
Removable work top	Yes
Door decor panel	N/A
Main colour of product	White
Electrical connection rating (W)	1900
Current (A)	13
Voltage (V)	220-240
Frequency (Hz)	50
Length of Electrical Supply Cord (cm)	130
Plug type	UK
Length inlet hose (cm)	155
Length outlet hose (cm)	150
Adjustable plinth	No
Height of removable worktop (mm)	0
Adjustable feet	Yes - all
Height of the product	850
Width of the product	450
Depth of the product	590
Depth with open door 90 degree (mm)	-
Minimum niche height	820
Maximum niche height	900
Minimum niche width	450
Maximum niche width	600
Niche depth	590
Net weight (kg)	39.5
Gross weight (kg)	41.5

TECHNICAL FEATURES

Automatic programmes	Yes
Maximum temperature for water intake (°C)	60
Start delay options	Continuous
Start delay time max. (h)	24
Progress indicator	-
Digital countdown indicator	Yes
Salt light indicator	Yes
Rinse aid light indicator	Yes
Safety device	Yes
Adjustable upper basket	Yes
Largest loadable dish upper basket (cm)	0
Largest loadable dish lower basket (cm)	0
Number of place settings	10

PERFORMANCES

Energy efficiency class - NEW (2010/30/EU)	A++
Energy consumption annual (kWh/annum) - NEW (2010/30/EU)	212
Duration of the left-on mode - NEW (2010/30/EU)	12
Power consumption in left-on mode - NEW (2010/30/EU)	5
Power consumption in off-mode - NEW (2010/30/EU)	0.5
Water consumption annual (l/annum) - NEW (2010/30/EU)	2520
Noise level (dB(A) re 1 pW)	43