# Instructions for use

## WASHER-DRYER



! This symbol reminds you to read this instruction manual.

GB

English,1

## RD 966 J

## Contents


**Installation, 2-3-4-5**
Unpacking and levelling
Connecting the electricity and water supplies
The first wash cycle
Technical data

**Care and maintenance, 6**
Cutting off the water or electricity supply
Cleaning the washer-dryer
Cleaning the detergent dispenser drawer
Caring for the door and drum of your appliance
Cleaning the pump
Checking the water inlet hose

**Precautions and tips, 7**
General safety
Disposal

**Description of the washer-dryer, 8-9**
Control panel
Display

**How to run a wash cycle or a drying cycle, 10**

**Wash cycles and functions, 11**
Table of wash cycles
Wash functions

**Detergents and laundry, 12**
Detergent dispenser drawer
Preparing the laundry
Special wash cycles
Load balancing system

**Troubleshooting, 13-14**

**Product Guarantee and Repair Information, 15**


Hotpoint

# Installation

GB

! Keep this instruction manual in a safe place for future reference. Should the appliance be sold, transferred or moved, make sure the instruction manual accompanies the washer-dryer to inform the new owner as to its operation and features.
! Read these instructions carefully: they contain vital information on installation, use and safety.

## Unpacking and levelling

### Unpacking

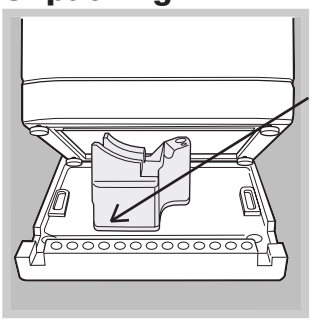

! This is a separate part of the polystyrene base and should be removed with the base.

**! IMPORTANT check when unpacking your machine.**

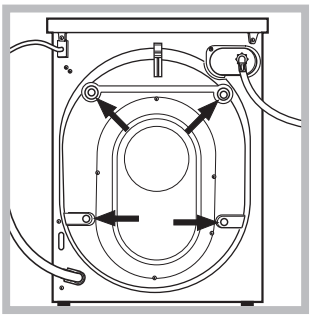

1. Unpack the washer-dryer.
2. Check whether the washer-dryer has been damaged during transport. If this is the case, do not install it and contact your retailer.
3. Remove the 4 protective screws and the rubber bush with the respective spacer, situated on the rear of the appliance (see also the installation leaflet).
4. Seal the gaps using the plastic plugs provided.
5. Keep all the parts: you will need them again if the washer-dryer needs to be moved to another location.
! Packaging materials are not children's toys.

### Levelling

Your machine may make a considerable amount of noise if the two front feet have not been adjusted correctly.

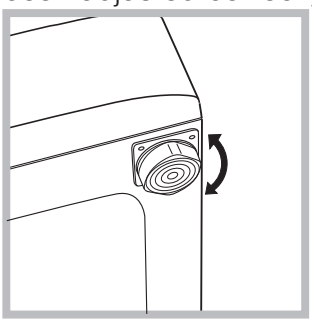

1. Install the washer-dryer on a flat sturdy floor, without resting it up against walls, cabinets or anything else.
2. If the floor is not perfectly level, compensate for any unevenness by tightening or loosening the adjustable front feet *(see figure);* the angle of inclination, measured according to the worktop, must not exceed 2°.
Levelling your appliance correctly will provide it with stability and avoid any vibrations, noise and shifting during operation. If it is placed on a fitted or loose carpet, adjust the feet in such a way as to allow enough room for ventilation beneath the washer-dryer.

## Electric and water connections

### Connecting the water inlet hose

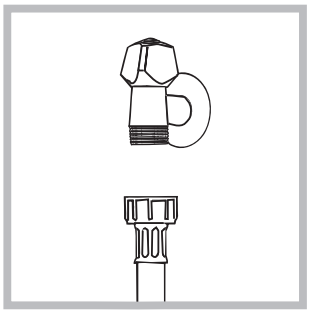

1. Connect the supply pipe by screwing it to a cold water tap using a 3/4 gas threaded connection *(see figure).*
Before performing the connection, allow the water to run freely until it is perfectly clear.

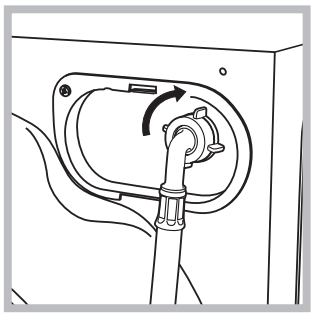

2. Connect the other end of the water inlet hose to the washer-dryer,
screwing it onto the appliance's cold water inlet, situated on the top right-hand side on the rear of the appliance (*see figure).*

3. Make sure there are no kinks or bends in the hose.

! The water pressure at the tap must be within the values indicated in the Technical details table *(on the page 5).*

! If the water inlet hose is not long enough, contact a specialist store or an authorised serviceman.

! Ensure that the supply taps are allowing water through. Old taps may seize in the closed position and thus prevent water reaching the machine.

! Never use second-hand or old inlet hoses; use the products supplied with the machine.

## Connecting the drain hose

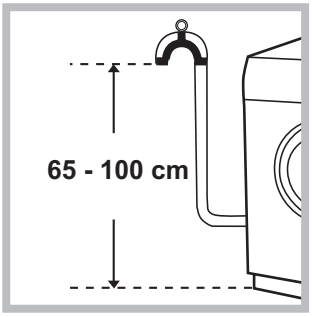


Connect the drain hose, without bending it, to a draining duct or a wall drain situated between 65 and 100 cm from the floor;

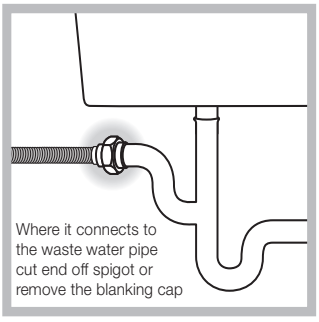


The drain hose may be connected to an under-sink trap. Before connecting the drain hose from the machine ensure that any blanks or removable ends have been taken off the spigot.

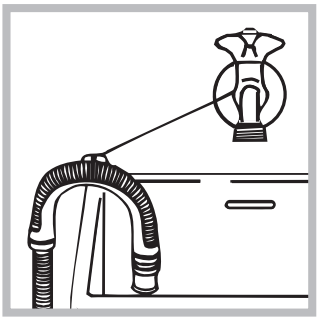

If it is placed over the edge of a basin or sink be sure the free end of the hose should not be underwater.

**!** We advise against the use of hose extensions; in case of absolute need, the extension must have the same diameter as the original hose and must not exceed 150 cm in length.
Ensure that if the drain hose is pushed into a standpipe, that the end does not go down more than 15cms (6 inches). If the hose is pushed down too far, this may cause the machine to self -syphon ie. continuously empty as it is filling.

## Electric connection

Before plugging the appliance into the mains socket, make sure that:

- the socket is earthed and in compliance with the applicable law;
- the socket is able to sustain the appliance's maximum power load indicated on the Technical Data Plate fixed on the machine;
- the supply voltage is included within the values indicated on the Technical Data Plate fixed on the machine.
- the socket is compatible with the washer-dryer's plug. If this is not the case, replace the socket or the plug.

Your appliance is now supplied with a 13 amp fused plug it can be plugged into a 13 amp socket for immediate use. Before using the appliance please read the instructions below.

WARNING - THIS APPLIANCE MUST BE EARTHED.
THE FOLLOWING OPERATIONS SHOULD BE CARRIED OUT BY A QUALIFIED ELECTRICIAN.

*Replacing the fuse:*
When replacing a faulty fuse, a 13 amp ASTA approved fuse to BS 1362 should always be used, and the fuse cover re-fitted. If the fuse cover is lost, the plug must not be used until a replacement is obtained.

*Replacement fuse covers:*
If a replacement fuse cover is fitted, it must be of the correct colour as indicated by the coloured marking or the colour that is embossed in words on the base of the plug. Replacements can be obtained directly from your nearest Service Depot.

*Removing the plug:*
If your appliance has a non-rewireable moulded plug and you should wish to re-route the mains cable through partitions, units etc., please ensure that either:
the plug is replaced by a fused 13 ampere rewireable plug bearing the BSI mark of approval.
*or:*
the mains cable is wired directly into a 13 amp cable outlet, controlled by a switch, (in compliance with BS 5733) which is accessible without moving the appliance.

*Disposing of the plug:*
Ensure that before disposing of the plug itself, you make the pins unusable so that it cannot be accidentally inserted into a socket.

Instructions for connecting cable to an alternative plug:
Important: the wires in the mains lead are coloured in accordance with the following code:

| | |
|---|---|
| **Green & Yellow** | **Earth** |
| **Blue** | **Neutral** |
| **Brown** | **Live** |

As the colours of the wires in the lead may not correspond with the coloured markings identifying the terminals in your plug, proceed as follows:
Connect Green & Yellow wire to terminal marked **E** or ⏚ or coloured Green or Green & Yellow.
Connect Brown wire to terminal marked **L** or coloured Red.
Connect Blue wire to terminal marked **N** or coloured Black.
If a 13 amp plug (BS 1363) is used it must be fitted with a
13 amp fuse, either in the plug or adaptor or at the distribution board.
If you are in any doubt regarding the electrical supply to your machine, consult a qualified electrician before use.
How to connect an alternative plug:
The wires in this mains lead are coloured in accordance with the following code:

| | |
|---|---|
| **BLUE** | **NEUTRAL (N)** |
| **BROWN** | **LIVE (L)** |
| **GREEN & YELLOW** | **EARTH (E)** |

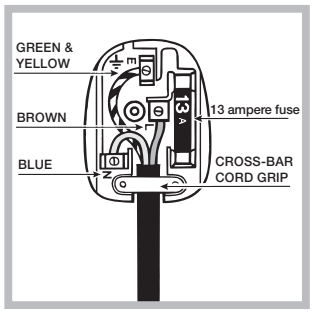


*Disposing of the appliance:*
When disposing of the appliance please remove the plug by cutting the mains cable as close as possible to the plug body and dispose of it as described on the previous page.

**!** The washer-dryer should not be installed in an outdoor environment, not even where the area is sheltered, because it may be very dangerous to leave it exposed to damp, rain and thunderstorms.

**!** When the washer-dryer is installed, the mains socket must be within easy reach.

**!** Do not use extensions or multiple sockets.

**!** The power supply cable must never be bent or dangerously compressed.

**!** The power supply cable must only be replaced by an authorised serviceman.

Warning! The company denies all liability if and when these norms are not respected.

## The first wash cycle

Once the appliance has been installed, and before you use it for the first time, run a wash cycle with detergent and no laundry, using wash cycle number auto clean *(see "Cleaning the washer-dryer").*

| Technical data | |
|---|---|
| **Model** | RD 966 J |
| **Dimensions** | width 59.5 cm<br>height 85 cm<br>depth 54 cm |
| **Capacity** | from 1 to 9 kg for the wash programme<br>from 1 to 6 kg for the drying programme |
| **Electrical connections** | please refer to the technical data plate fixed to the machine |
| **Water connections** | maximum pressure<br>1 MPa (10 bar)<br>minimum pressure<br>0.05 MPa (0.5 bar)<br>drum capacity 58 litres |
| **Spin speed** | up to 1600 rotations per minute |
| **Energy rated programmes according to regulation EN 50229** | **Wash**: programme 8; temperature 60°C; using a load of 9 kg.<br>**Drying**: the greater load (6kg) must be dried by selecting the “EXTRA” dryness level.<br>The remainder of the load must be dried by selecting the “EXTRA” dryness level: the load must consist of 3 sheets, 2 pillowcases and 1 hand towel. |
|  | This appliance conforms to the following EC Directives:<br>- 2004/108/EC (Electromagnetic Compatibility)<br>- 2006/95/EC (Low Voltage)<br>- 2012/19/EU (WEEE) |

# Care and maintenance

GB

## Cutting off the water and electricity supplies

- Turn off the water tap after every wash cycle. This will limit wear on the hydraulic system inside the washer-dryer and help to prevent leaks.

- Unplug the washer-dryer when cleaning it and during all maintenance work.

## Cleaning the washer-dryer

- The outer parts and rubber components of the appliance can be cleaned using a soft cloth soaked in lukewarm soapy water. Do not use solvents or abrasives.
- The washer-dryer has a auto clean programme for its internal parts that **must be run with no load in the drum**.

To help the wash cycle you may want to use either the detergent (i.e. a quantity 10% the quantity specified for lightly-soiled garments) or special additives to clean the washer-dryer. We recommend running a cleaning programme every 40 wash cycles.
To activate the programme, press the button for 5 seconds then press START/PAUSE to start the programme, which will last roughly 70 minutes.

## Cleaning the detergent dispenser drawer

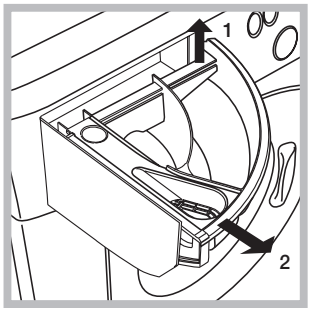


Remove the dispenser by raising it and pulling it out *(see figure).*
Wash it under running water; this operation should be repeated frequently.

## Caring for the door and drum of your appliance

- Always leave the porthole door ajar in order to prevent unpleasant odours from forming.

## Cleaning the pump

The washer-dryer is fitted with a self-cleaning pump which does not require any maintenance. Sometimes, small items (such as coins or buttons) may fall into the pre-chamber which protects the pump, situated in its bottom part.

**!** Make sure the wash cycle has finished and unplug the appliance.

To access the pre-chamber:

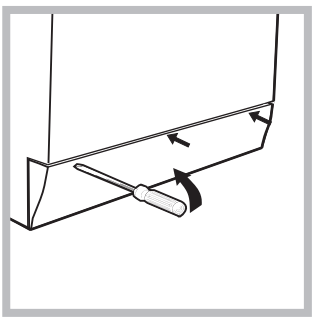

1. using a screwdriver, remove the cover panel on the lower front part of the washer-dryer *(see figure);*

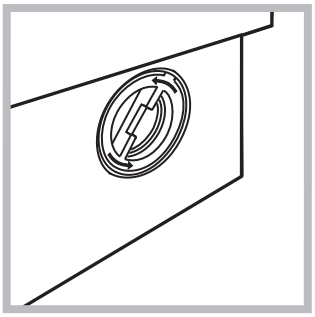

2. unscrew the lid by rotating it anticlockwise *(see figure)*: a little water may trickle out. This is perfectly normal;

3. clean the inside thoroughly;
4. screw the lid back on;
5. reposition the panel, making sure the hooks are securely in place before you push it onto the appliance.

## Checking the water inlet hose

Check the inlet hose at least once a year. If there are any cracks, it should be replaced immediately: during the wash cycles, water pressure is very strong and a cracked hose could easily split open.

**!** Never use second-hand hoses.

GB

! This washer-dryer was designed and constructed in accordance with international safety regulations. The following information is provided for safety reasons and must therefore be read carefully.

## General safety

- This appliance was designed for domestic use only.
- This appliance can be used by children aged from 8 years and above and persons with reduced physical, sensory or mental capabilities or lack of experience and knowledge if they have been given supervision or instruction concerning use of the appliance in a safe way and understand the hazards involved. Children shall not play with the appliance. Cleaning and user maintenance shall not be made by children without supervision.
  – Do not dry unwashed items in the tumble dryer.
  – Items that have been soiled with substances such as cooking oil, acetone, alcohol, petrol, kerosene, spot removers, turpentine, waxes and wax removers should be washed in hot water with an extra amount of detergent before being dried in the tumble dryer.
  – Items such as foam rubber (latex foam), shower caps, waterproof textiles, rubber backed articles and clothes or pillows fitted with foam rubber pads should not be dried in the tumble dryer.
  – Fabric softeners, or similar products, should be used as specified by the fabric softener instructions.
  – The final part of a tumble dryer cycle occurs without heat (cool down cycle) to ensure that the items are left at a temperature that ensures that the items will not be damaged.
  WARNING: Never stop a tumble dryer before the end of the drying cycle unless all items are quickly removed and spread out so that the heat is dissipated.
- Do not touch the machine when barefoot or with wet or damp hands or feet.
- Do not pull on the power supply cable when unplugging the appliance from the electricity socket. Hold the plug and pull.
- Do not open the detergent dispenser drawer while the machine is in operation.
- Do not touch the drained water as it may reach extremely high temperatures.
- Never force the porthole door. This could damage the safety lock mechanism designed to prevent accidental opening.
- If the appliance breaks down, do not under any circumstances access the internal mechanisms in an attempt to repair it yourself.
- Always keep children well away from the appliance while it is operating.
- The door can become quite hot during the wash cycle.
- If the appliance has to be moved, work in a group of two or three people and handle it with the utmost care. Never try to do this alone, because the appliance is very heavy.
- Before loading laundry into the washer-dryer, make sure the drum is empty.
- During the drying phase, the door tends to get quite hot.
- Do not use the appliance to dry clothes that have been washed with flammable solvents (e.g. trichlorethylene).
- Do not use the appliance to dry foam rubber or similar elastomers.
- Make sure that the water tap is turned on during the drying cycles.
- Children of less than 3 years should be kept away from the appliance unless continuously supervised.
- Remove all objects from pockets such as lighters and matches.

## Disposal

- Disposing of the packaging materials: observe local regulations so that the packaging may be re-used.
- The European Directive 2012/19/EU on Waste Electrical and Electronic Equipment, requires that old household electrical appliances must not be disposed of in the normal unsorted municipal waste stream. Old appliances must be collected separately in order to optimise the recovery and recycling of the materials they contain and reduce the impact on human health and the environment. The crossed out “wheeled bin” symbol on the product reminds you of your obligation, that when you dispose of the appliance it must be separately collected.
  Consumers should contact their local authority or retailer for information concerning the correct disposal of their old appliance.

# Description of the washer-dryer

GB

## Control panel

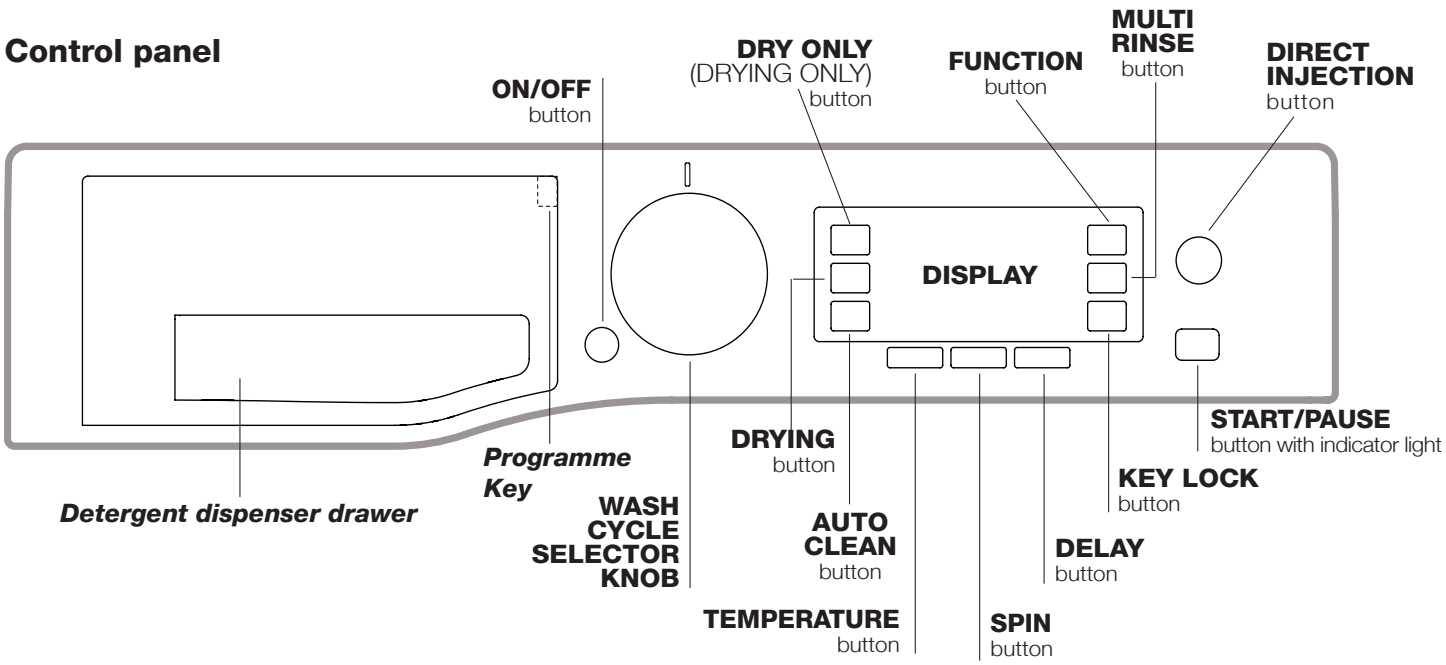


***Detergent dispenser drawer*:** used to dispense detergents and washing additives *(see "Detergents and laundry")*.

***Programme Key:*** the Programme Key inside the detergent dispenser shows all the available programmes together with a graphical guide on how to use the individual dispenser compartments.

**ON/OFF** button ⏻: press this briefly to switch the machine on or off. The START/PAUSE indicator light, which flashes slowly in a green colour shows that the machine is switched on. To switch off the washer-dryer during the wash cycle, press and hold the button for approximately 3 seconds; if the button is pressed briefly or accidentally the machine will not switch off. If the machine is switched off during a wash cycle, this wash cycle will be cancelled.

**WASH CYCLE SELECTOR KNOB:** used to set the desired wash cycle (see "*Table of programmes and wash cycles*").

**FUNCTION** button: press the button to select the desired function. The corresponding indicator light on the display will switch on.

**AUTO CLEAN** button**:** press to clean the machine's internal parts *(see "Cleaning the washer-dryer").*

**DIRECT INJECTION** button: press to select the DIRECT INJECTION option.

**MULTI RINSE** button **:** press to select the desired rinse type.

**SPIN** button : press to reduce or completely exclude the spin cycle - the value is indicated on the display.

**TEMPERATURE** button : press to decrease the temperature: the value will be shown on the display.

**DRYING** button **:** press to decrease or exclude drying; the selected drying level or time will appear on the display.

**DRY ONLY** (DRYING ONLY) button **:** press to run the drying cycle only.

**KEY LOCK** button : to **activate** the control panel lock, press and hold the button for approximately 2 seconds. When the display visualises "KEY LOCK ON" the control panel is locked (apart from the ON/OFF button). This means it is possible to prevent wash cycles from being modified accidentally, especially where there are children in the home. To **deactivate** the control panel lock, press and hold the button for approximately 2 seconds.

**DELAY** button : press to set a delayed start time for the selected wash cycle. The delay time will be shown on the display.

**START/PAUSE** button with indicator light: when the green indicator light flashes slowly, press the button to start a wash cycle. Once the cycle has started the indicator light will remain lit in a fixed manner. To pause the wash cycle, press the button again; the indicator light will flash in an orange colour. If the symbol is not illuminated, the door may be opened. To start the wash cycle from the point at which it was interrupted, press the button again.

**Standby mode**
This washer-dryer, in compliance with new energy saving regulations, is fitted with an automatic standby system which is enabled after about 30 minutes if no activity is detected. Press the ON-OFF button briefly and wait for the machine to start up again.
*Consumption in off-mode: 0,5 W*
*Consumption in Left-on: 8 W*

## Display

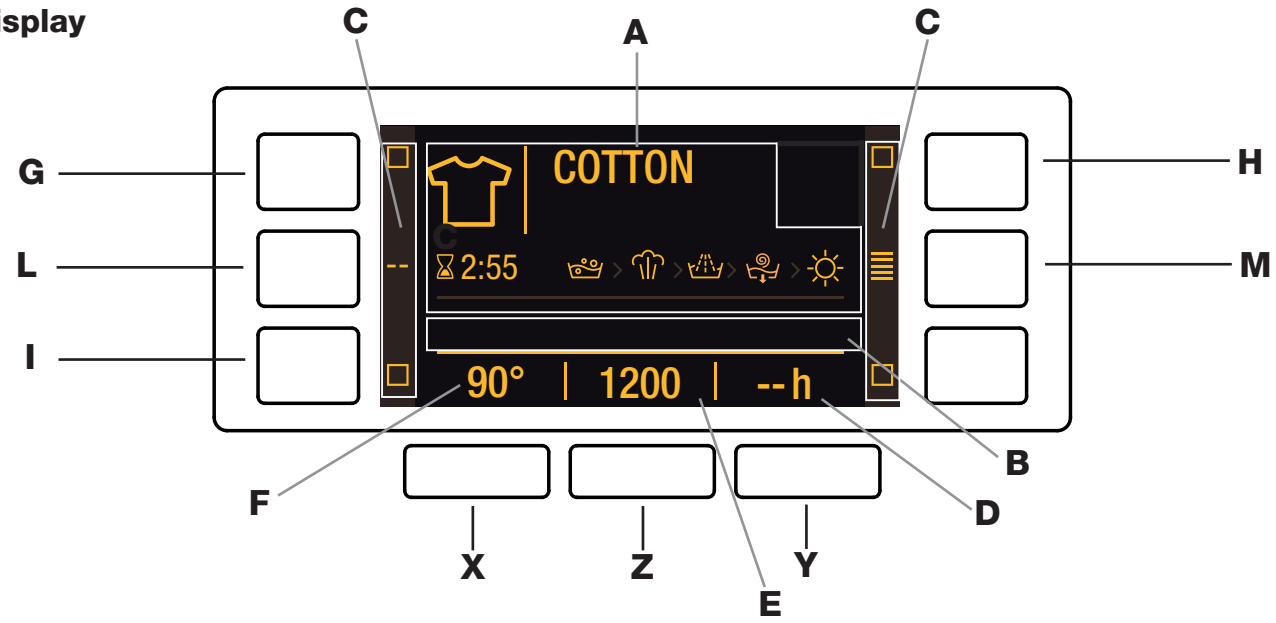


The display is useful when programming the machine and provides a great deal of information.

The following will appear in area **A**: the icon and programme selected, the washing and drying phases and time remaining to the end of the cycle.

Area **B** will include the two intensity levels relative to the DIRECT INJECTION option.

The indicator lights relative to the available functions appear in area **C**.

Area **D** will have the time remaining to the start of the selected programme if the DELAY function was set.

String **E** shows the maximum spin speed value (this depends on the selected wash cycle); if the programme does not include the spin cycle, the dimly lit "**--**" symbol will appear in the area.

Area **F** will visualise the temperature value selectable on the basis of the set programme; if the temperature of the programme cannot be set, the area will show the symbol "**--**" dimly lit.

**Door locked symbol**
If the symbol is lit, this indicates that the washer-dryer door is blocked to prevent it from being opened accidentally. To prevent any damage from occurring, wait for the symbol to switch itself off before opening the appliance door.
**N.B.:** if the DELAY function has been activated, the door cannot be opened; pauses the machine by pressing the START/PAUSE button if you wish to open it.

**!** The first time the machine is switched on, you will be asked to select the language and the display will automatically show the language selection menu.
To select the desired language press the **X** and **Y** buttons; to confirm the selection press the **Z** button.
To change the language switch off the machine and press buttons **G**, **H**, **I simultaneously** until an alarm is heard: the language-selection menu will be displayed again.

**!** To change the display luminosity, which by default is set to the highest value, switch the machine off then **simultaneously** press buttons **G**, **L** and **M** until the buzzer sounds. Press buttons **X** and **Y** to choose the desired level of luminosity then confirm by pressing button **Z**.

**!** During the wash cycle or when the DELAY function has been enabled, if the user does not interact with the display for 1 minute the "SCREEN SAVER" activates. To return to the previous window, simply press any button.

# How to run a wash cycle or a drying cycle

GB

1. **SWITCH THE MACHINE ON.** Press the On/Off button; the text HOTPOINT will appear on the display and the START/PAUSE indicator light will flash slowly in a green colour.
2. **LOAD THE LAUNDRY.** Open the porthole door. Load the laundry, making sure you do not exceed the maximum load value indicated in the table of programmes on the following page.
3. **MEASURE OUT THE DETERGENT.** Open the detergent dispenser drawer and pour the detergent into the relevant compartments as described in "Detergents and laundry".
4. **CLOSE THE DOOR.**
5. **SELECT THE WASH CYCLE.** Use the WASH CYCLE SELECTOR knob to select the desired wash cycle; the name of the wash cycle will appear on the display. A temperature and spin speed is set for each wash cycle; these may be adjusted. The duration of the cycle will appear on the display.
6. **CUSTOMISE THE WASH CYCLE.** Use the relevant buttons:

   **Modifying the temperature and/or spin speed.** The machine automatically selects the maximum temperature and spin speed set for the selected wash cycle; these values cannot therefore be increased. The temperature can be decreased by pressing the button, until the cold wash (the display will visualise the "**--**" symbol) setting is reached. The spin speed may be progressively reduced by pressing the button, until it is completely excluded (the display will visualise the "**--**" symbol). If these buttons are pressed again, the maximum values are restored.
   **!** Exception: if the 5 programme is selected, the temperature can be increased up to a value of 40°C.
   **!** Exception: if the 7 programme is selected, the temperature can be increased up to a value of 90°C.
   **!** Exception: if the 9 programme is selected, the temperature can be increased up to a value of 60°C.

   **Setting a delayed start.**
   To set a delayed start for the selected programme, press the corresponding button repeatedly until the required delay period has been reached. To remove the delayed start function press the button until the text "**-- h**" appears on the display.

   **Setting the drying cycle.**
   The desired drying cycle type may be set by pressing the DRYING button once or several times. Two options are available:
   **A** - Based on the how damp the clothes are once they have been dried:
   **Iron:** suitable for clothes which will need ironing afterwards. the remaining dampness softens creases, making them easier to remove.
   **Hanger:** ideal for clothes which do not need to be dried fully.
   **Cupboard:** suitable for laundry which can be put back in a cupboard without being ironed.
   **Extra:** suitable for garments which need to be dried completely, such as sponges and bathrobes.
   **B** - Based on a set time period: between **30** and **180** minutes.
   To exclude the drying phase press the relevant button until the text OFF appears on the display.
   If your laundry load to be washed and dried is much greater than the maximum stated load, perform the wash cycle, and when the cycle is complete, divide the garments into groups and put some of them back in the drum. At this point, follow the instructions provided for a "**Dry only**" cycle. Repeat this procedure for the remainder of the load. A cooling-down period is always added to the end of each drying cycle.

   **Dry only**
   Press button to perform the drying-only cycle.
   After selecting the desired cycle (compatible with the type of garments), press button to exclude the washing phase and start the drying phase at the maximum level for the selected cycle. The drying level or time may be set and changed by pressing the drying button . (Not compatible with cycles 1-2-3-4 and 14).

   **Set the rinse type.**
   Option makes it possible to select the desired rinse type for sensitive skin. Press the button once for the "**Extra +1**" level, which makes it possible to select an additional rinse after the standard cycle rinse and remove all traces of detergent. Press the button again for the "**Extra +2**" level, which makes it possible to select two additional rinses to the standard cycle rinses; it is recommended for very sensitive skin. When the button is pressed for the third time, the "**Extra +3**" level is set, thus allowing the selection of 3 rinses in addition to the standard cycle's rinses. The option - started with cycles at a temperature of 40°C - makes it possible to remove major allergens such as pollen, cat and dog hair. With cycles at a temperature higher than 40° a very good level of antiallergic protection is achieved. Press the button again to go back to the "**Normal rinse**" rinse type. If the current adjustment can be neither set nor changed, the display will show "**No Selection**" or "**No Change**".

   **Modifying the cycle settings.**
   - Press the button to enable the function; the relevant indicator light on the display will light up.
   - Press the button again to disable the function; the relevant indicator light on the display will switch off.

   **!** If the selected function is incompatible with the set programme, the relevant indicator light will appear dimly lit; in addition, the incompatibility will be signalled by a buzzer (3 beeps) and the wording "**No Selection**" will appear on the display.
   **!** If the selected function is incompatible with another previously set function, the wording "**No Selection**" will appear on the display and the function will not be enabled.
   **!** The functions may affect the recommended load value and/or the duration of the cycle.
7. **START THE PROGRAMME.** Press the START/PAUSE button. The corresponding indicator light will become green, remaining lit in a fixed manner, and the door will be locked (the DOOR LOCKED symbol will be on). During the wash cycle, the name of the phase in progress will appear on the display. To change a wash cycle while it is in progress, pause the washer-dryer using the START/PAUSE button (the START/PAUSE indicator light will flash slowly in an orange colour); then select the desired cycle and press the START/PAUSE button again. To open the door while a cycle is in progress, press the START/PAUSE button; if the DOOR LOCKED symbol is switched off the door may be opened. Press the START/PAUSE button again to restart the wash cycle from the point at which it was interrupted.
8. **THE END OF THE WASH CYCLE.** This will be indicated by the text "CYCLE END" on the display; when the DOOR LOCKED symbol switches off the door may be opened. Open the door, unload the laundry and switch off the machine.

**!** If you wish to cancel a cycle which has already begun, press and hold the button. The cycle will be stopped and the machine will switch off.

**Direct Injection**
The washer-dryer is equipped with the innovative technology «Direct Injection» which pre-mixes water and detergent, thus immediately activating the detergent's cleaning principles. This active emulsion is directly introduced into the drum of the washer-dryer and penetrates the fibres with more efficacy in cleaning even heavily soiled garments at low temperatures, fully preserving colours and fabrics.
The mode «Power» ensures the best cleaning performance and the mode «EcoEnergy» allows more energy saving.

# Wash cycles and functions Hotpoint

GB

## Table of wash cycles

| Wash cycles | Description of the wash cycle | Max. temp. (°C) | Max. speed (rpm) | Drying | Detergents | | Max. load (kg) | Cycle duration |
|---|---|---|---|---|---|---|---|---|
| | | | | | Wash | Fabric softener | | |
| | **ANTI CREASE** | | | | | | | The duration of the wash cycle can be checked on the display. |
| **1** | **Daily Wash & Dry** (Daily Mix Wash & Dry) | 40° | 800 | ● | ● | ● | 3 | |
| **2** | **Shirts Wash & Dry** | 40° | 1000 | ● | ● | ● | 2 | |
| **3** | **Pre Iron** | - | - | - | - | - | 1,5 | |
| **4** | **Steam Refresh** | - | - | - | - | - | 2 | |
| | **DAILY CLEAN** | | | | | | | |
| **5** | **Anti-Stain Turbo 45'** (Anti Stain Turbo 45') | 20° (Max. 40°C) | 1200 | ● | ● | ● | 4 | |
| **6** | **Anti-Stain Power 20°C** (Anti Stain Power 20°C) | 20° | 1600 | ● | ● | ● | 9 | |
| **7** | **Cotton:** lightly soiled resistant and delicate colours. | 40° (Max. 90°C) | 1600 | ● | ● | ● | 9 | |
| **8** | **Eco Cotton** 60'/40' **(1-2):** heavily soiled whites and resistant colours. | 60° | 1600 | ● | ● | ● | 9 | |
| **9** | **Synthetics (3):** lightly soiled resistant colours. | 40° (Max. 60°C) | 1000 | ● | ● | ● | 4,5 | |
| | **SPECIALS** | | | | | | | |
| **10** | **Multicolour** (Multi Colour) | 40° | 1600 | ● | ● | ● | 9 | |
| **11** | **Ultradelicates** (Ultra Delicates) | 30° | -- | ● | ● | ● | 1 | |
| **12** | **Wool:** for wool, cashmere, etc. | 40° | 800 | ● | ● | ● | 2 | |
| **13** | **Sport** | 40° | 600 | ● | ● | ● | 4 | |
| **14** | **Fast** (Fast 30') **(**):** to refresh lightly soiled garments quickly (not suitable for wool, silk and clothes which require washing by hand). | 30° | 800 | ● | ● | ● | 3,5 | |
| | **Partial Programmes** | | | | | | | |
| | **Rinse** | - | 1600 | ● | - | ● | 9 | |
| | **Spin + Pump out** | - | 1600 | ● | - | - | 9 | |
| | **Pump out** only * | - | -- | - | - | - | 9 | |

* If you select programme and exclude the spin cycle, the machine will drain only.

** If a drying cycle is also programmed, the machine will run a "wash+dry" programme lasting 45' with maximum spin speed and a 1kg laundry load.

*The length of cycle shown on the display or in this booklet is an estimation only and is calculated assuming standard working conditions. The actual duration can vary according to factors such as water temperature and pressure, the amount of detergent used, the amount and type of load inserted, load balancing and any wash options selected.*

1) Test wash cycle in compliance with regulation EN 50229: set wash cycle 8 with a temperature of 60°C.
2) Long wash cycle for cottons: set programme 8 at temperature 40°C and press the DIRECT INJECTION button under "Power" mode.
3) Long wash cycle for synthetics: set wash cycle 9 with a temperature of 40°C.

## Wash functions

**!** If the selected function is incompatible with the set programme, the relevant indicator light will appear dimly lit; in addition, the incompatibility will be signalled by a buzzer (3 beeps) and the wording "**No Selection**" will appear on the display.
**!** If the selected function is incompatible with another previously set function, the wording "**No Selection**" will appear on the display and the function will not be enabled.

### Steam

This option enhances washing performance by generating steam during the wash cycle to remove any bacteria from the fibres, which are treated at the same time. Place the laundry in the drum, choose a compatible programme and select option .
**!** The steam generated during the operation of the washing machine may cause the porthole door to become hazy.

# Detergents and laundry

GB

## Detergent dispenser drawer

Good washing results also depend on the correct dose of detergent: adding too much detergent will not necessarily result in a more efficient wash, and may in fact cause a build up on the inside of your appliance and contribute to environmental pollution.

**!** Use powder detergent for white cotton garments, for pre-washing, and for washing at temperatures over 60°C.

**!** Follow the instructions given on the detergent packaging.

**!** Do not use hand washing detergents because these create too much foam.

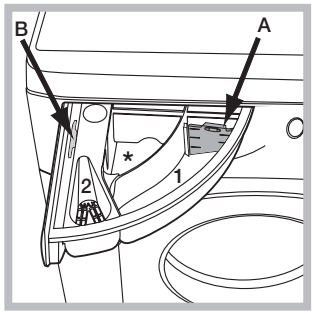


Open the detergent dispenser drawer and pour in the detergent or washing additive, as follows.

**!** Do not pour detergent into the middle compartment (*****).

**compartment 1: Detergent for the wash cycle (powder or liquid)**

If liquid detergent is used, it is recommended that the removable plastic partition **A** (supplied) be used for proper dosage. If powder detergent is used, place the partition into slot **B**.

**compartment 2: Additives (fabric softeners, etc.)**

The fabric softener should not overflow the grid.

## Preparing the laundry

- Divide the laundry according to:
  - the type of fabric/the symbol on the label
  - the colours: separate coloured garments from whites.
- Empty all garment pockets and check the buttons.
- Do not exceed the listed values, which refer to the weight of the laundry when dry: see "*Table of wash cycles*".

**How much does your laundry weigh?**

1 sheet 400-500 g
1 pillow case 150-200 g
1 tablecloth 400-500 g
1 bathrobe 900-1200 g
1 towel 150-250 g

## Special wash cycles

**Daily Wash & Dry** use programme **1** to wash and dry mixed garments (cotton and synthetics). This cycle may be used to wash and dry loads of up to 3 kg; *we recommend the use of liquid detergent.*

The use of the steam in this programme is optimised to reduce the formation of creases on garments, making them easier to iron.

**Shirts Wash & Dry:** use programme **2** to wash and dry shirts and T-shirts in different fabrics and colours to ensure maximum care. This cycle may be used to wash and dry loads of up to 2 kg. To achieve optimum results, use liquid detergent and pre-treat cuffs, collars and stains. The use of the steam in this programme is optimised to reduce the formation of creases on garments, making them easier to iron.

**Pre Iron:** use this programme immediately before ironing; max. 1.5 kg load. The use of the steam in this programme is optimised to reduce the formation of creases on garments, making them easier to iron.

**Steam Refresh:** for refreshing garments, neutralised unpleasant odours and relaxing the fibres by delivering steam into the drum. The garments will be damp at the end of the cycle.

**Anti-Stain Turbo 45':** this cycle ensures excellent stain removal capacity even at 20°C in just 45 minutes. The temperature of this cycle can be increased up to 40°C.

**Anti-Stain Power 20°C:** this programme ensures maximum stain removal capacity with no need for pre-treatment at low temperatures, preserving fabrics and colours.

**Multicolour:** for washing coloured cotton garments. This programme is optimised to keep colours bright even after repeated washing.

**Ultradelicates:** use programme **11** to wash very delicate garments having strasses or sequins.

We recommend turning the garments inside out before washing and placing small items into the special bag for washing delicates. Use liquid detergent on delicate garments for best results.

When selecting an exclusively time-based drying function, a drying cycle is performed at the end of the wash cycle that is particularly delicate, thanks to light handling and appropriate temperature control of the water jet.

The recommended durations are:

1 kg of synthetic garments --> 165 min
1 kg of synthetic and cotton garments --> 180 min
1 kg of cotton garments --> 180 min

The degree of dryness depends on the load and fabric composition.

**Wool - *Woolmark Apparel Care - Green:***

the wool wash cycle of this machine has been approved by The Woolmark Company for the washing of wool garments labelled as "hand wash" provided that the products are washed according to the instructions on the garment label and those issued by the manufacturer of this washer-dryer.




**Sport:** for washing lightly soiled sports clothing (tracksuits, shorts, towels, etc.); for best results, we recommend not exceeding the maximum load indicated in the "*Table of wash cycles*". We recommend using liquid detergent, and adding the amount suitable for a half-load.

## Load balancing system

Before every spin cycle, to avoid excessive vibrations and to distribute the load in a uniform manner, the drum rotates continuously at a speed which is slightly greater than the washing rotation speed. If, after several attempts, the load is not balanced correctly, the machine spins at a reduced spin speed. If the load is excessively unbalanced, the washer-dryer performs the distribution process instead of spinning. To encourage improved load distribution and balance, we recommend small and large garments are mixed in the load.

# Troubleshooting

Hotpoint

GB

Your washer-dryer could occasionally fail to work. Before contacting the Technical Assistance Service (*see " Product Guarantee and Repair Information"*), make sure that the problem cannot be solved easily using the following list.

| Problem: | Possible causes / Solutions: |
|---|---|
| **The machine does not switch on.** | • The appliance is not plugged into the socket fully, or not enough to make contact.<br>• There is no power to the socket, or the fuse has blown in the mains plug. |
| **The wash cycle does not start.** | • The door is not closed properly.<br>• The ON/OFF button has not been pressed.<br>• The START/PAUSE button has not been pressed.<br>• The water tap has not been turned on to allow water to flow into the machine.<br>• A delayed start has been set. |
| **The machine does not dry.** | • Check the 2 sections above.<br>• DRYING is in the OFF position. |
| **The clothes are too hot when the drying cycle is finished.** | • A cooling-down period is always added to the end of each drying cycle. If the clothes appear too hot to handle leave the door open to allow to cool further before removing from the machine. |
| **The washer-dryer does not take in water (the text "NO WATER, Turn tap on" appears on the display).** | • The water inlet hose is kinked.<br>• The water inlet hose is not connected to the water supply.<br>• The water pressure is too low.<br>• The water tap has not been turned on to allow water to flow into the machine.<br>• There is no water supply to the house.<br>• The inlet valve filter is blocked.<br>• The START/PAUSE button has not been pressed. |
| **The machine continuously fills with water and continually drains away or Water left in the drum or Stuck on wash.** | • The top of the drain hose is too low - It must be fitted at a height between 65 and 100 cm from the floor *(see "Installation")*.<br>• The drain hose is connected incorrectly to the sink trap allowing water to run into the machine, the drain hose must be positioned higher than the bottom of the sink to prevent water flowing down the drain hose.<br>• The end of the drain hose has been pushed too far down the standpipe, the 'U' bracket should be fitted 100 mm from the end of the drain hose. |
| **The machine does not drain or spin - (error lights flashing).** | • The Pump filter is blocked.<br>• The drain hose is kinked *(see "Installation")*.<br>• New Installation - The blanking cap or spigot has not been removed if connected under a sink.<br>• The drain hose or sink trap is blocked. |
| **The machine does spin.** | • The Spin Speed is set to "**--**". |
| **The machine does not heat or poor wash results.** | • The 'Temperature' is set to "**--**". |
| **The programme takes too long.** | • Programme times will vary due to water pressure, the incoming water temperature and if the wash load goes out of balance. This will increase the programme times accordingly (see ' The machine wont spin properly' next page). |
| **The Display sticks at one 'time to end' for more than 1 Minute or the Display changes the estimated 'Time to End' during the programme.** | • The display time is for guidance only - ***it is not a precise time to finish and may vary***. |
| **The machine vibrates a lot during the spin cycle.** | • The feet have not been adjusted, enabling the machine to rock.<br>• New Installation - Either the Transit Bolts including the plastic spacers, or the Polystyrene Packaging have not been removed when installing the machine.<br>• The machine is trapped between cabinets and/or walls.<br>• The load is in a slight out of balance condition and machine is spinning, but at a lower speed. |

GB

| | |
|---|---|
| **The machine is noisy.** | • There will always be some motor, pump and drum noise during spin. |
| **The machine wont spin properly.** | • Out of Balance detected when attempting to go into a spin cycle - If this happens the machine will continue to try to repeat the distribution of the load required before the machine will go into higher spin speeds - This will increase the programme time accordingly. This is a safety feature to prevent damage. Out of Balance can be caused by washing a single heavy item (eg duvet, quilt, etc). - Try the programme again using a different load. |
| **The machine leaks from the dispenser.** | • The dispenser drawer is blocked with detergent and requires cleaning.<br>• The water pressure is too high and requires turning down - turn down the tap on the water supply pipe slightly and try again.<br>• The machine is tilting forwards - It must be level when in its final position. |
| **The machine leaks (other than dispenser).** | • The fill hose is loose, check both the cabinet and tap ends.<br>• The fill hose is tight but still leaks, if so replace the rubber washers, or the fill hose is missing the rubber washer.<br>• The drain hose is not fixed in properly. |
| **The machine is locked and the display flashes, indicating an error code (e.g. F-01, F-..).** | • Switch off the machine and unplug it, wait for approximately 1 minute and then switch back on again. If the problem persists contact Technical Assistance Centre. |
| **The machine smells.** | • The machine requires a service wash. Run a auto clean wash cycle with detergent and no laundry. |
| **The machine door cannot be opened.** | • The door will not open until the door lock indicator light goes out shortly after the program has finished.<br>• If there is no power to the machine you need to perform the manual unlocking procedure. |
| **Door Seal damaged at the bottom.** | • The door seal has drainage holes at the bottom - This is normal. |
| **The water level is too low when the machine is washing.** | • The water level is correct if it can be seen at the bottom of the door. |
| **There is too much foam.** | • The detergent is not suitable for machine washing (it should display the text 'for washer-dryers' or 'hand and machine wash' or the like).<br>• Too much detergent was used - less detergent is required in soft water. |
| **The machine just 'beeps' when a programme or option is selected (Key Lock led is lit).** | • Deactivate the Key Lock feature by pressing and holding in the 'KEY LOCK' button for 2 seconds. |
| **After completing the programme, or before starting a programme, the machine has turned itself off (no lights).** | • To comply with new energy saving regulations the machine is fitted with an automatic standby system. Press 'ON/OFF' button for 3 seconds to activate the machine, it can then either be switched off or a new programme selected. |
| **General.** | • Your washer-dryer contains sensors that monitor progress during the wash cycle (eg: Water Levels, Temperatures, Out of Balance loads, Wash time/progress). Normally, if your machine successfully completes the cycle, there is unlikely to be anything wrong! |

**Remember, you will be charged for a service call for problems caused by incorrect installation, as indicated on pages 2 to 4.**

**Not emptying contents from pockets may cause pump or drain blockages, or may damage the machine.**

**Do not wash items which do not have a wash label, or wash items that are not intended as machine washable.**

# Product Guarantee and Repair Information

Hotpoint

GB

## Guarantee

### 12 Months Parts and Labour Guarantee

Your appliance has the benefit of our manufacturer's guarantee, which covers the cost of breakdown repairs for twelve months from the date of purchase. This gives you the reassurance that if, within that time, your appliance is proven to be defective because of either workmanship or materials, we will, at our discretion, either repair or replace the appliance at no cost to you:

This guarantee is subject to the following conditions:

- The appliance has been installed and operated correctly and in accordance with our operating and maintenance instructions.
- The appliance is used only on the electricity or gas supply printed on the rating plate.
- The appliance has been used for normal domestic purposes only.
- The appliance has not been altered, serviced, maintained, dismantled, or otherwise interfered with by any person not authorised by us.
- Any repair work must be undertaken by us or our appointed agent.
- Any parts removed during repair work or any appliance that is replaced become our property.
- The appliance is used in the United Kingdom or Republic of Ireland.

The guarantee does not cover:

- Damage resulting from transportation, improper use, neglect or interference or as a result of improper installation.
- Replacement of any consumable item or accessory. These include but are not limited to: plugs, cables, batteries, light bulbs, fluorescent tubes and starters, covers and filters.
- Replacement of any removable parts made of glass or plastic.

THIS GUARANTEE WILL NOT APPLY IF THE APPLIANCE HAS BEEN USED IN COMMERCIAL OR NON-DOMESTIC PREMISES.

### Recycling and Disposal Information

As part of Hotpoint's continued commitment to helping the environment, Hotpoint reserves the right to use quality, recycled components to keep down customer costs and minimise material wastage.

Please dispose of packaging and old appliances carefully. To minimise the risk of injury to children, remove the door, plug, and cut the mains cable off flush with the appliance. Dispose of these parts separately to ensure that the appliance can no longer be plugged into mains socket, and the door cannot be locked shut.

## Repairs and After Sales

For product help and advice, repairs, spare parts or accessories, we're here to help.

For local repair engineers - **03448 111 606**
ROI - **0818 313 413**

UK standard local rate applies
ROI local Irish rate applies

For Parts and Accessories visit:
**parts.hotpoint.co.uk/shop**

Please remember to register your appliance at **www.hotpointservice.co.uk** to activate your 10 year parts guarantee.

How to find your model and serial number:

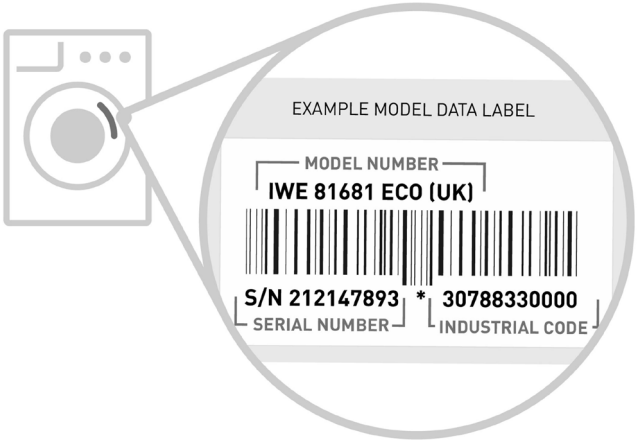

GB

Indesit Company Spa
Viale Aristide Merloni, 47
60044 Fabriano (AN)
Italy
www.hotpoint.co.uk