Operating instructions

countertop freezer

EN

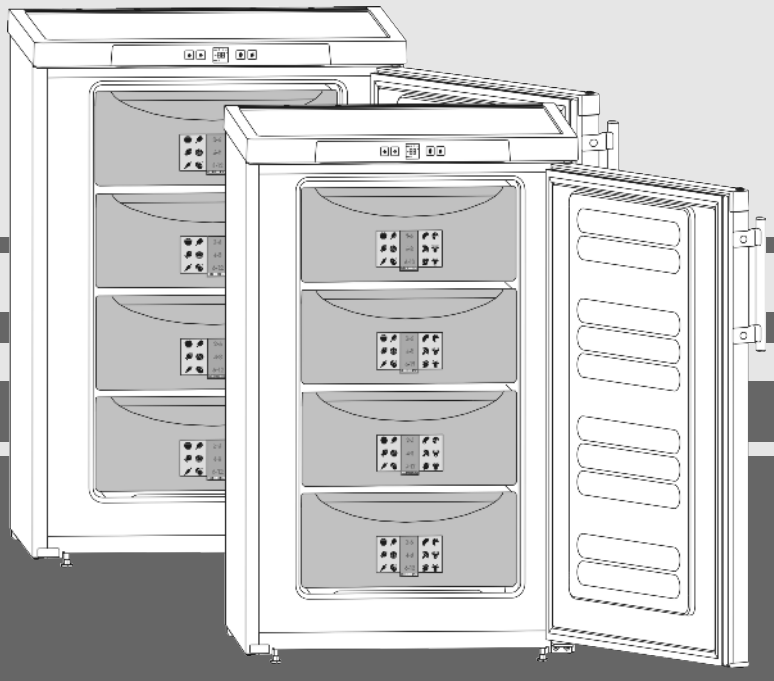

20200127 **7081994 - 02**

GP(esf)14../GP13..

LIEBHERR

Contents

1	**Appliance at a glance**	**2**
1.1	Overview of the appliance and equipment	2
1.2	Appliance range of use	2
1.3	Conformity	3
1.4	Product data	3
1.5	Installation dimensions	3
1.6	Saving energy	3
2	**General safety information**	**3**
3	**Controls and displays**	**4**
3.1	Operating controls	4
3.2	Temperature display	4
4	**Putting into operation**	**5**
4.1	Transporting the appliance	5
4.2	Installing the appliance	5
4.3	Changing over the door hinges	5
4.4	Insertion into a row of kitchen units	6
4.5	Disposing of packaging	6
4.6	Connecting the appliance	6
4.7	Switching on the appliance	7
5	**Control**	**7**
5.1	Brightness of the temperature display	7
5.2	Child proofing	7
5.3	Temperature alarm	7
5.4	Freezing food	7
5.5	Thawing food	8
5.6	Setting the temperature	8
5.7	SuperFrost	8
5.8	Drawers	8
5.9	Shelves	8
5.10	VarioSpace	9
5.11	Information system	9
5.12	Freezer pack	9
6	**Maintenance**	**9**
6.1	Manual defrosting	9
6.2	Cleaning the appliance	9
6.3	Customer service	10
7	**Malfunctions**	**10**
8	**Decommissioning**	**11**
8.1	Switching off the appliance	11
8.2	Taking the appliance out of service	11
9	**Disposing of the appliance**	**11**

The manufacturer works constantly on the further development of all the types and models. Therefore please understand that we have to reserve the right to make design, equipment and technical modifications.

To get to know all the benefits of your new appliance, please read the information contained in these instructions carefully.

The instructions apply to several models. Differences may occur. Text relating only to specific appliances is marked with an asterisk (*).

Instructions for action are marked with a ▶, the results of action are marked with a ▷.

1 Appliance at a glance

1.1 Overview of the appliance and equipment

Note

▶ Shelves, drawers and baskets are arranged for optimum energy efficiency on delivery.

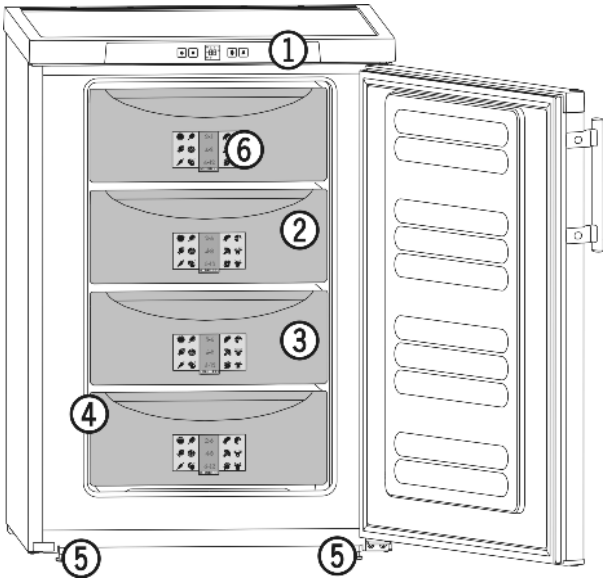

Fig. 1

(1) Operating controls
(2) VarioSpace
(3) Drawer
(4) Type plate
(5) Adjustable feet
(6) Information system

1.2 Appliance range of use

Intended use

The appliance is only suitable for cooling food products in a domestic or household-like environment. This includes, for example, use:

- in staff kitchens, bed and breakfast establishments,
- by guests in country houses, hotels, motels and other accommodation,
- for catering and similar services in the wholesale trade.

All other types of use are not permitted.

Foreseeable misuse

The following applications are expressly forbidden:

- Storing and refrigerating medicines, blood plasma, laboratory preparations or similar substances and products based on the Medical Device Directive 2007/47/EC
- Use in areas at risk of explosions

Misusing the appliance may lead to damage to the goods stored or they may spoil.

Climate classifications

Depending on the climate classification the appliance is designed to operate in restricted ambient temperatures. The climate classification applying to your appliance is printed on the rating plate.

Note

▶ Keep to the specified ambient temperatures in order to guarantee that the appliance works properly.

Climate classification	for ambient temperatures
SN, N	to 32 °C
ST	to 38 °C
T	to 43 °C

The appliance will work properly down to a lower ambient temperature of -15 °C.

1.3 Conformity

The refrigerant circuit has been tested for leaks. This appliance complies with the applicable safety stipulations and with directives 2014/35/EU, 2014/30/EU, 2009/125/EG, 2011/65/EU and 2010/30/EU.

1.4 Product data

Product data is included with the appliance, as per Directive (EU) 2017/1369. The complete product data sheet is available on the Liebherr website under Downloads.

1.5 Installation dimensions

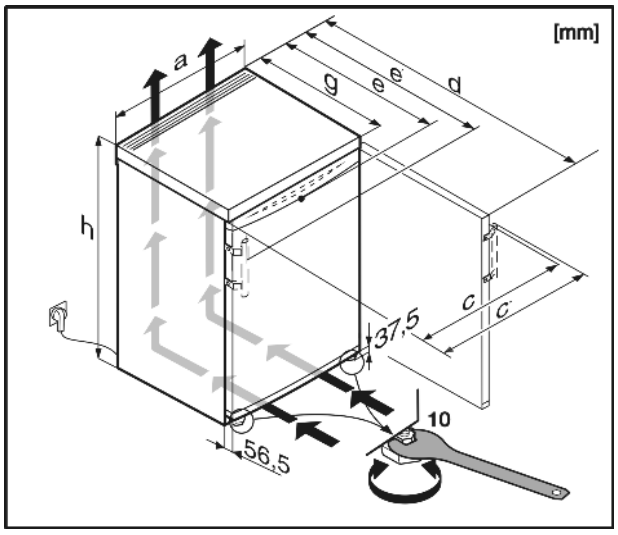

Fig. 2

	h	a	g	e	e'	d	c	c'
GP1376	851	553	611[x]	624[x]	653[x]	1129[x]	563	592
GP1476	851	602	611[x]	628[x]	657[x]	1174[x]	613	640
GPesf1476	851	602	611[x]	610[x]	657[x]	1174[x]	597	644
GP1486	851	602	611[x]	628[x]	657[x]	1174[x]	613	640

[x] For appliances supplied with wall spacers, the measurement increases by 35 mm (see 4.2 Installing the appliance) .

1.6 Saving energy

- Pay attention to good ventilation. Do not cover ventilation holes or grids.
- Do not install the appliance in direct sunlight, next to an oven, radiator or similar.
- Energy consumption is dependent on the installation conditions, e.g. ambient temperature (see 1.2 Appliance range of use) . If the ambient temperature deviates from the standard temperature of 25°C, the energy consumption may differ.
- Open the appliance for as short a time as possible.
- The lower the temperature is set the higher the energy consumption.
- Keep all food properly packed and covered. This prevents frost from forming.
- Inserting warm food: allow to cool down to room temperature first.
- If there is a thick layer of frost in the appliance: defrost the appliance.

Dust deposits increase energy consumption:

- For refrigerators with heat exchangers dust the metal grid on the back of the appliance once a year.

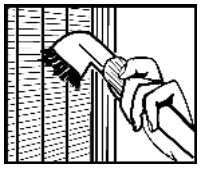

2 General safety information

Danger for the user:

- This device can be used by children and people with impaired physical, sensory or mental abilities or with a lack of experience and knowledge provided that they are supervised or have received instruction in the safe use of this device, and about the resulting hazards. Children must not play with this appliance. Cleaning and user maintenance work must not be carried out by children without adult supervision. Children aged between 3 and 8 are allowed to load and unload the appliance. Children below the age of 3 must be kept away from the appliance unless they are under continuous adult supervision.
- When disconnecting the appliance from the supply, always take hold of the plug. Do not pull the cable.
- In the event of a fault pull out the mains plug or deactivate the fuse.
- Do not damage the mains power cable. Do not operate the appliance with a defective mains power cable.
- Repairs, interventions on the appliance and the replacement of mains connection line may only be carried out by After-Sales Service or other suitably trained specialist personnel.
- Only assemble, connect and dispose of the appliance according to the instructions.
- Please keep these instructions in a safe place and pass them on to any subsequent owners.

Fire hazard:

- The coolant used (information on the model plate) is eco-friendly but also flammable. Any leaking coolant may ignite.
  - Do not damage the refrigerant circuit pipes.
  - Do not use an open flame or other source of ignition inside the appliance.
  - Do not use electrical appliances inside the appliance (e.g. steam cleaners, heaters, ice cream makers, etc.).

EN

- If the refrigerant leaks: remove any naked flames or ignition sources from the vicinity of the leakage point. Properly air the room. Inform customer services.

- Do not store explosives or sprays using combustible propellants such as butane, propane, pentane, etc. in the appliance. To identify these spray cans, look for the list of contents printed on the can, or a flame symbol. Gases possibly escaping may ignite due to electrical components.
- Keep burning candles, lamps and other items with naked flames away from the appliance so that they do not set the appliance on fire.
- Please be sure to store alcoholic drinks or other packaging containing alcohol in tightly closed containers. Any alcohol that leaks out may be ignited by electrical components.

Danger of tipping and falling:

- Do not misuse the plinth, drawers, doors etc. as a step or for support. This applies particularly to children.
- Danger of tipping if the door is open if the appliance has not yet been installed properly.

Danger of food poisoning:

- Do not consume food which has been stored too long.

Danger of frostbite, numbness and pain:

- Avoid lasting skin contact with cold surfaces or refrigerated/frozen food or take protective steps, e.g. wear gloves. Do not consume ice cream, water ice or ice cubes immediately and do not consume them too cold.

Danger of injury and damage:

- Hot steam can lead to injury. Do not use electrical heating or steam cleaning equipment, open flames or defrosting sprays to defrost.
- Do not use sharp implements to remove the ice.

Danger of crushing:

- Do not hold the hinge when opening and closing the door. Fingers may get caught.

Symbols on the appliance:

	The symbol can be located on the compressor. It refers to the oil in the compressor and indicates the following danger: Swallowing or inhaling can be fatal. This is only relevant for recycling. There is no danger in normal operation.
	This symbol is found on the compressor and indicates the danger of flammable materials.
	A sticker to this effect may be applied to the rear of the appliance. It refers to the foam-padded panels in the door and/or the housing. This is only relevant for recycling. Do not remove the sticker.

Please observe the specific information in the other sections:

	DANGER	identifies a situation involving direct danger which, if not obviated, may result in death or severe bodily injury.
	WARNING	identifies a dangerous situation which, if not obviated, may result in death or severe bodily injury.
	CAUTION	identifies a dangerous situation which, if not obviated, may result in minor or medium bodily injury.
	NOTICE	identifies a dangerous situation which, if not obviated, may result in damage to property.

	Note	identifies useful information and tips.

3 Controls and displays

3.1 Operating controls

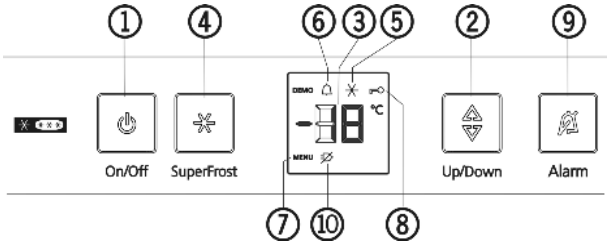

Fig. 3

(1) On/Off button
(2) Adjustment button
(3) Temperature display
(4) SuperFrost button
(5) SuperFrost symbol
(6) Alarm symbol
(7) Menu symbol
(8) Child lock symbol
(9) Alarm button
(10) Power failure symbol

3.2 Temperature display

During normal operation, the display shows:

- the highest freezing temperature

The temperature display flashes if/when:

- You change the temperature setting
- The appliance is not cold enough after switching on
- The temperature rises by several degrees

Stripes flash in the display if/when:

- The freezer temperature exceeds 0 °C.

The following displays indicate a fault. Possible causes and solutions: (see 7 Malfunctions) .

- F0 to F5
- The power failure symbol flashes.

4 Putting into operation

4.1 Transporting the appliance

CAUTION
Risk of injury and danger of damage as a result of incorrect transport!
▶ Transport the appliance in a packed condition.
▶ Transport the appliance upright.
▶ Do not transport the appliance without assistance.

4.2 Installing the appliance

WARNING
Fire hazard due to dampness!
If live parts or the mains lead become damp this may cause short circuits.
▶ The appliance is designed for use in enclosed areas. Do not operate the appliance outdoors or in areas where it is exposed to splash water or damp conditions.

WARNING
Risk of fire due to short circuit!
If the mains cable/connector of the appliance or of another appliance touch the rear of the appliance, the mains cable/connector may be damaged by the appliance vibrations, leading to a short circuit.
▶ Stand the appliance so that it is not touched by connectors or main cables.
▶ Do not plug the appliance or any others into sockets located near the rear of the appliance.

WARNING
Fire hazard due to refrigerant!
The coolant used is eco-friendly but also flammable. Any leaking coolant may ignite.
▶ Do not damage the piping of the refrigeration circuit.

WARNING
Fire hazard and danger of damage!
▶ Do not place appliances emitting heat e.g. microwaves, toasters etc. on the appliance!

WARNING
Blocked ventilation openings pose a risk of fire and damage!
▶ Always keep the ventilation openings clear. Always ensure that the appliance is properly ventilated!

Note
The bags at the rear of the appliance are important for proper operation. Their contents are nontoxic and nonhazardous.*
▶ Do not remove the bags!

NOTICE
Risk of damage due to condensate!
▶ Do not install the appliance directly alongside a further refrigerator/freezer.

❑ Before you connect the appliance, report any damage immediately to the delivery company.
❑ The floor of the installation site must be horizontal and even.
❑ Do not install the appliance in direct sunlight, next to an oven, radiator or similar.
❑ The best place for installation is a dry and well ventilated room.
❑ Install the appliance with the rear panel up against the wall and always use the supplied wall spacers (see below).
❑ Only ever move the appliance when it is empty.
❑ The surface supporting the appliance must be at the same level as the surrounding floor.
❑ Do not install the appliance on your own.
❑ The more coolant there is in the appliance, the larger the room in which the appliance is installed must be. If the room is too small, any leak may create a flammable mixture of gas and air. For each 8 g of coolant the installation space must be at least 1 m^3. Information on the coolant is on the model plate inside the appliance.

▶ Detach the connecting cable from the rear of the appliance, removing the cable holder at the same time because otherwise there will be vibratory noise!
▶ Remove the protective film from the outside of the appliance.*
▶ Remove all transit supports.

The spacers supplied with some appliances must be used to achieve the stated energy consumption. These will extend the depth of the appliance by approx. 35 mm. The appliance is fully functional if the spacers are not used, but does have a slightly higher energy consumption.

▶ In the case of an appliance with enclosed wall spacers, mount the wall spacers on the back of the appliance at the top left and right.

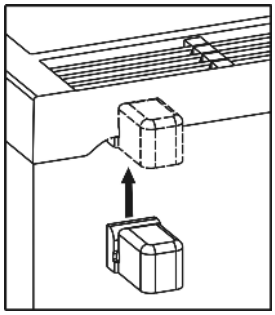

▶ Dispose of packaging material (see 4.5 Disposing of packaging) .
▶ Align the appliance so that it stands firmly and on a level by applying the accompanying spanner to the adjustable-height feet (A) and using a spirit level.

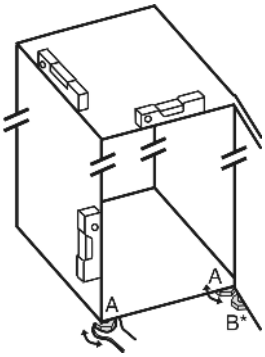

Note
▶ Clean the appliance (see 6.2 Cleaning the appliance) .

If the appliance is installed in a very damp environment, condensate may form on the outside of the appliance.
▶ Always see to good ventilation at the installation site.

4.3 Changing over the door hinges

You can change over the door hinges if necessary.

Make sure that the following tools are at hand:
❑ Torx® 25
❑ Torx® 15
❑ Supplied open-ended wrench

EN

❑ If necessary, a second person to assist with installation

CAUTION
Risk of injury if the door tips!
▶ Take good hold of the door.
▶ Set down the door carefully.

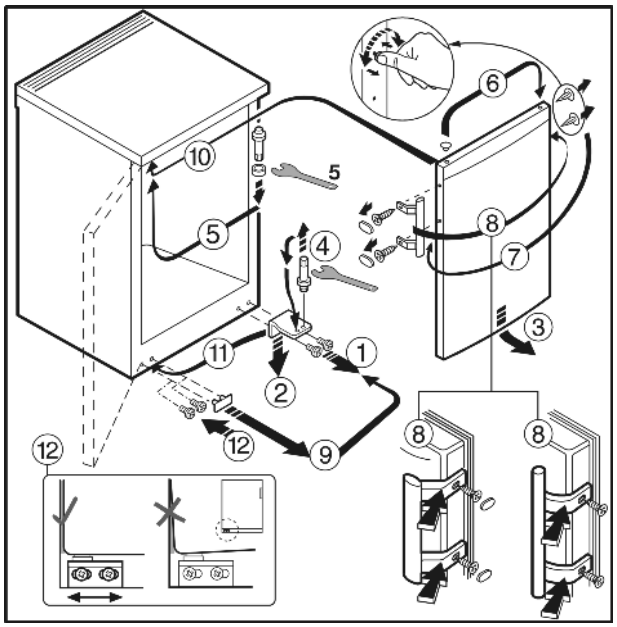

Fig. 4 On appliances with a door handle

▶ Follow the sequence of the item numbers in the diagram.

WARNING
Risk of injury due to the door dropping out!
If the bearing parts are not screwed into place firmly enough, the door may drop out. This may lead to severe injuries. What is more, the door may not close and therefore the appliance may fail to cool properly.
▶ Screw on the bearing brackets/bearing pins tightly (4 Nm).
▶ Check all of the screws and retighten if necessary.

4.4 Insertion into a row of kitchen units

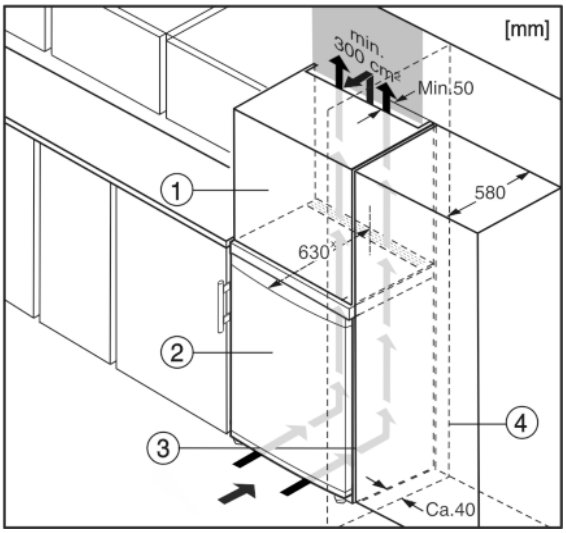

Fig. 5

(1) Stack cabinet
(2) Appliance
(3) Kitchen cabinet
(4) Wall

[x] For appliances supplied with wall spacers, the measurement increases by 35 mm (see 4.2 Installing the appliance) .

The appliance can be built into kitchen units. A top cupboard *Fig. 5 (2)* can be added above the appliance in order to bring the appliance *Fig. 5 (1)* up to the height of the fitted kitchen units.

When installing with kitchen units (max. depth 580 mm), the appliance can be positioned directly next to the kitchen cabinet *Fig. 5 (3)*. The appliance will project by 34 mm [x] at the sides and 50 mm [x] in the centre of the appliance in relation to the kitchen cabinet front.

NOTICE
Danger of overheating due to insufficient air ventilation!
The compressor may be damaged if there is insufficient air ventilation.
▶ Take care to ensure adequate air ventilation.
▶ Observe the ventilation requirements.

Ventilation requirements:

- At the back of the stack cabinet there has to be a ventilation duct of at least 50 mm depth throughout the width of the stack cabinet.
- The cross section of the ventilation gap below the ceiling must be at least 300 cm^2 .
- the larger the ventilation space, the more energy-saving the appliance is in operation.

If the appliance is installed with the hinges next to a wall *Fig. 5 (4)*, the distance between appliance and wall has to be at least 40 mm. This corresponds to the projection of the handle when the door is open.

4.5 Disposing of packaging

WARNING
Danger of suffocation due to packing material and plastic film!
▶ Do not allow children to play with packing material.

The packaging is made of recyclable materials:

- corrugated board/cardboard
- expanded polystyrene parts
- polythene bags and sheets
- polypropylene straps
- nailed wooden frame with polyethylene panel*

▶ Take the packaging material to an official collecting point.

4.6 Connecting the appliance

NOTICE
Failure to connect properly
Damage to the electronics.
▶ Do not use a standalone inverter.
▶ Do not use an energy saving plug.

WARNING
Failure to connect properly
Fire hazard.
▶ Do not use an extension cable.
▶ Do not use distributor blocks.

The type of current (alternating current) and voltage at the installation site have to conform with the data on the type plate (see 1 Appliance at a glance) .

The socket must be properly earthed and fused. The tripping current for the fuse must be between 10 A and 16 A.

The socket must be easily accessible so that the appliance can be quickly disconnected from the supply in an emergency. It must be outside the area of the rear of the appliance.

*** Depending on model and options**

▶ Check the electrical connection.
▶ Plug in the power plug.



4.7 Switching on the appliance

▶ Press the On/Off button *Fig. 3 (1)*.
▷ The appliance is switched on. The temperature display and Alarm symbol *Fig. 3 (6)* flash until the temperature is cold enough.
▷ If “DEMO” is displayed, demo mode is activated. Please contact the after sales service.

5 Control

5.1 Brightness of the temperature display

You can adjust the brightness of the temperature display to the light conditions of the room in which the appliance is installed.

5.1.1 Setting the brightness

The brightness is adjustable between **h 0** (minimum brightness) and **h 5** (maximum brightness).

▶ Activate setting mode by pressing the SuperFrost button, *Fig. 3 (4)*, for approx. 5 sec.
▷ The Menu symbol is shown on the display, *Fig. 3 (7)*.
▷ **c** flashes on the display.
▶ Use the adjustment button, *Fig. 3 (2)*, to select **h**.
▶ Briefly confirm with the SuperFrost button, *Fig. 3 (4)*.
▷ The display shows the last set brightness value.



▶ Use the adjustment button, *Fig. 3 (2)*, to set the desired value from **h 0** to **h 5**.
▶ Briefly confirm the newly set brightness value with the SuperFrost button *Fig. 3 (4)*.
▷ **h** flashes on the display.
▷ The brightness is set.
▶ After making the change, deactivate setting mode: Press the On/Off button *Fig. 3 (1)* once.
▷ The temperature display shows the temperature again.

If setting mode is already activated but you would like to keep the old brightness value setting:
▶ Press the On/Off button *Fig. 3 (1)*twice to deactivate setting mode.
▷ The temperature display shows the temperature again.

5.2 Child proofing

The child-proofing function enables you to make sure that the appliance is not inadvertently switched off by playing children.



5.2.1 Setting the child lock

To switch on the function:
▶ Activate setting mode: press the SuperFrost button *Fig. 3 (4)* for approx. 5 seconds.
▷ The Menu symbol *Fig. 3 (7)* is shown on the display.
▷ **c** flashes on the display.
▶ Briefly confirm with the SuperFrost button, *Fig. 3 (4)*.
▷ **c1** appears in the display.
▶ Briefly confirm with the SuperFrost button, *Fig. 3 (4)*.
▷ The child lock symbol *Fig. 3 (8)*, lights up on the display.
▷ **c** flashes on the display.



▷ The child lock function is switched on.
If setting mode is to be terminated:
▶ Briefly press the On/Off button *Fig. 3 (1)*.
-or-
▶ Wait for 5 minutes.
▷ The temperature display shows the temperature again.

To switch off the function:
▶ Activate setting mode: press the SuperFrost button *Fig. 3 (4)* for approx. 5 seconds.
▷ The Menu symbol *Fig. 3 (7)* is shown on the display.
▷ **c** flashes on the display.
▶ Briefly confirm with the SuperFrost button, *Fig. 3 (4)*.
▷ **c0** appears in the display.
▶ Briefly confirm with the SuperFrost button, *Fig. 3 (4)*.
▷ The child lock symbol *Fig. 3 (8)* goes out.
▷ **c** flashes on the display.
▷ The child lock function is switched off.
If setting mode is to be terminated:
▶ Briefly press the On/Off button *Fig. 3 (1)*.
-or-
▶ Wait for 5 minutes.
▷ The temperature display shows the temperature again.

5.3 Temperature alarm

The audible alarm sounds if the freezer temperature is not cold enough.

The temperature display and the alarm symbol *Fig. 3 (6)* flash at the same time.



The cause of the temperature being too high may be:
- warm fresh food was placed inside
- too much warm ambient air flowed in when rearranging and removing food
- Prolonged power outage
- the appliance is faulty

The audible alarm is automatically silenced, the alarm symbol *Fig. 3 (6)* goes out and the temperature display stops flashing when the temperature is sufficiently cold again.

If the alarm status persists: (see 7 Malfunctions) .

Note
Food may be spoilt if the temperature is not cold enough.
▶ Check the quality of the food. Do not consume spoiled food.

5.3.1 Muting the temperature alarm

The audible alarm can be muted. When the temperature is sufficiently cold again, the alarm function is active again.
▶ Press alarm button *Fig. 3 (9)*.
▷ The audible alarm is silenced.

5.4 Freezing food

The rating plate indicates the maximum quantity of fresh food you can freeze within 24 hours (see 1 Appliance at a glance) under “Freezing capacity ... kg/24h”.

Each drawer can hold a max. of 25 kg of frozen food.

The shelves can each be loaded with 35 kg of frozen food.

EN

CAUTION
Risk of injury due to broken glass!
Bottles and cans containing drinks may burst when being frozen. This applies particularly to sparkling drinks.
▶ Do not freeze bottles and cans containing drinks!

So that the food is rapidly frozen through to the core, do not exceed the following quantities per pack

- Fruit, vegetables up to 1 kg
- Meat up to 2.5 kg

▶ Pack the food in portions in freezer bags, reusable plastic, metal or aluminium containers

5.5 Thawing food

- in the refrigerator compartment
- in a microwave oven
- in a conventional or fan oven
- at room temperature

▶ Remove only as much food as is required. Use thawed food as quickly as possible.
▶ Food once thawed should be re-frozen only in exceptional cases.

5.6 Setting the temperature

The temperature depends on the following factors:

- the frequency of opening the door
- how long the door is open for
- the room temperature of the installation location
- the type, temperature and quantity of the food

Recommended temperature setting: -18 °C

The temperature is changed sequentially. Once the -28 °C setting is reached, the sequence starts again at -14 °C.

▶ Call up the temperature function by pressing the adjustment button *Fig. 3 (2)* once.
▷ The previously-set value will flash in the temperature display.
▶ Change temperature in 1 °C steps: press the setting button *Fig. 3 (2)* until the required temperature is indicated in the temperature display.
▶ Change temperature continually: hold down setting button.
▷ During adjustment the value flashes on the display.
▷ The new setting is adopted approx. 5 seconds after the last time the button was pressed and the set temperature is again displayed. The temperature in the interior gradually adjusts to the new value.

5.7 SuperFrost

With this function you can freeze fresh food quickly through to the core. The appliance operates with maximum refrigeration. The noise of the refrigeration unit may be temporarily louder as a result.

In addition, frozen food already in storage is given a “cold reserve”. The food stays frozen longer as a result when you defrost the appliance.

You can freeze as many kilograms of fresh food within 24 hrs as is indicated on the type plate under “Freezing capacity ... kg/ 24hrs”. This maximum freezing quantity can vary depending on model and climate class.

You have to activate SuperFrost in good time, depending on how much fresh food is to be frozen: about 6 hours before placing the food inside in case of small amounts and about 24 hours in advance in case of the maximum amount of food to be frozen.

Wrap produce and spread it out as far as possible. Do not allow produce to be frozen to touch produce that is already frozen to prevent the latter thawing.

You do not have to activate SuperFrost in the following cases:

- when placing frozen food in the freezer
- when freezing up to approx. 1 kg fresh food daily

5.7.1 Freezing with SuperFrost

▶ Briefly press the SuperFrost button *Fig. 3 (4)* once.
▷ The SuperFrost symbol *Fig. 3 (5)* shines.
▷ The freezing temperature drops, the appliance operates with the maximum cooling capacity.

Note
▶ When the SuperFrost button is pressed, the built-in switch-on delay may defer compressor activation by up to 8 minutes. This delay extends the service life of the compressor.

For a smaller quantity of produce to be frozen:
▶ wait approx. 6 h.
▶ Place wrapped produce in the bottom drawers.
For the maximum quantity of produce to be frozen:
▶ wait approx. 24 h.
▶ Remove bottom drawer and place produce directly in the appliance so that it touches the base or sides.
▷ SuperFrost is automatically deactivated. Depending on the quantity placed inside, after 30 h at the earliest, 65 h at the latest.
▷ The SuperFrost symbol *Fig. 3 (5)* extinguishes once freezing is completed.
▶ Place produce in the drawers and push the latter back in again.
▷ The appliance continues to operate in the energy-saving, normal mode.

5.8 Drawers



▶ To store frozen food directly on the shelves pull the drawer forward and lift it out.

5.9 Shelves

5.9.1 Moving shelves

▶ To remove the shelf: lift up at the front and pull out.
▶ To put the shelf back: simply push in as far as it will go.

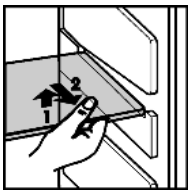

5.10 VarioSpace

You can remove the shelves and drawers. This leaves more room for larger food items such as poultry, meat, large game and tall baked goods, which can be frozen whole before further preparation.

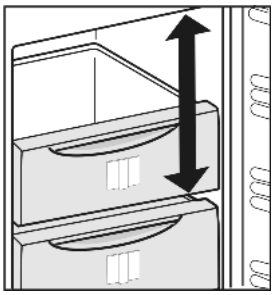

- ▶ Each drawer can hold max. 25 kg of frozen food.
- ▶ The shelves can each be loaded with 35 kg of frozen food.

5.11 Information system



Fig. 6

(1) Ready-made meals, ice cream
(2) Pork, fish
(3) Fruit, vegetables
(4) Sausages, bread
(5) Game, mushrooms
(6) Poultry, beef/veal

The figures indicate the storage time in months for several types of frozen food in each case. Storage times given are guide times.

5.12 Freezer pack

Freezer packs prevent the temperature rising too quickly should there be a power cut.

5.12.1 Using freezer packs

- ▶ Put the fully frozen freezer packs on the frozen food in the top front section of the freezer compartment.

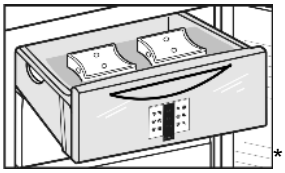

*

6 Maintenance

6.1 Manual defrosting

After a long period of operation, a layer of frost or ice can build up inside the appliance.

The layer of frost or ice builds up faster if the appliance is opened often or if the food is warm when placed inside. However, a thick layer of ice will increase the appliance's energy consumption. You should therefore defrost the appliance regularly.

Remove ice from inside surface at top of appliance:

A layer of ice forms inside at the centre of the top of the device. This ice forms as a result of physical properties.

- ▶ Regularly remove the ice with a scraper tool. The appliance does not need to be be thawed for that reason.

Thawing process:

WARNING

Danger of injury and damage

- ▶ Do not use any mechanical aids or other means not recommended by the manufacturer in order to accelerate the defrosting process.
- ▶ Do not use electrical heating or steam cleaning equipment, open flames or defrosting sprays to defrost.
- ▶ Do not use sharp implements to remove the ice.
- ▶ Do not damage the pipework in the refrigerant circuit.

- ▶ Switch on SuperFrost one day before defrosting.
- ▷ The frozen goods are provided with a "cold reserve".
- ▶ Switch off the appliance.
- ▷ The temperature display goes out.
- ▷ If the temperature display does not go out, the child lock function (see 5.2 Child proofing) is active.
- ▶ Pull out the power plug or switch off the fuse.
- ▶ Place cold storage accumulators on top of the frozen food.
- ▶ If possible, put the frozen goods in the freezer drawer, wrapped in newspaper or a blanket, and store in a cool place.
- ▶ Place a pan with hot, not boiling water on a middle shelf.

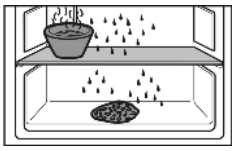

- ▷ Defrosting is speeded up.
- ▶ Leave the door of the appliance open while defrosting.
- ▶ Remove detached pieces of ice.
- ▶ If necessary, pick up defrost water several times, using a sponge or cloth.
- ▶ Clean the appliance (see 6.2 Cleaning the appliance) .

6.2 Cleaning the appliance

Clean the appliance regularly.

WARNING

Risk of injury and damage as a result of hot steam!
Hot steam can lead to burns and can damage the surfaces.

- ▶ Do not use any steam cleaners!

NOTICE

Incorrect cleaning damages the appliance!

- ▶ Do not use cleaning agents in concentrated form.
- ▶ Do not use any scouring or abrasive sponges or steel wool.
- ▶ Do not use any sharp or abrasive cleaning agents, nor any that contain sand, chloride or acid.
- ▶ Do not use chemical solvents.
- ▶ Do not damage or remove the type plate on the inside of the appliance. It is important for the customer service.
- ▶ Do not pull off, bend or damage cables or other components.
- ▶ Do not allow any cleaning water to enter the drain channel, ventilation grille or electrical parts.
- ▶ Please use soft cleaning cloths and a universal pH-neutral cleaning agent.
- ▶ Please use cleaning and care products suitable for contact with foodstuffs in the appliance interior.

- ▶ **Empty appliance.**
- ▶ **Pull out the power plug.**



- ▶ Clean the **vent grille** regularly.
- ▷ Dust deposits increase energy consumption.
- ▶ Clean **plastic outer and inner surfaces** with lukewarm water and a little washing-up liquid.

EN

- ▶ Only use a soft clean cloth to wipe **side walls with a paint finish**. In the case of heavy soiling, use lukewarm water with neutral cleaning agent.*
- ▶ Use only a soft clean cloth to wipe **door surfaces** with a paint finish. In the case of heavy soiling, use a little water or neutral cleaning agent. A micro-fibre cloth can be used optionally.*

Do not apply stainless steel cleaning agent to glass or plastic surfaces to prevent them from being scratched. Darker areas at the beginning and quite an intensive colour of the stainless steel surface are normal.*

- ▶ When soiled, clean **stainless steel outer surfaces** with a commercially available stainless steel cleaning agent. Then apply the enclosed stainless steel care product evenly in the direction of polishing.*
- ▶ **Clean drawers** by hand with lukewarm water and a little washing up liquid.
- ▶ Clean **other items of equipment** by hand with lukewarm water and a little washing-up liquid.

After cleaning:

- ▶ Wipe dry the appliance and items of equipment.
- ▶ Connect the appliance and switch it on again.
- ▶ Switch on SuperFrost (see 5.7 SuperFrost) .
  When the temperature is sufficiently cold:
- ▶ Put the food back inside.

6.3 Customer service

First check whether you can correct the fault yourself by reference to the list (see 7 Malfunctions) . If this is not the case, please contact the customer service whose address is given in the enclosed customer service list.

WARNING

Risk of injury if repair work is not carried out professionally!

- ▶ Have any repairs and action - not expressly specified - on the appliance and mains cable carried out by service personnel only. (see 6 Maintenance)

- ▶ Read the appliance designation *Fig. 7 (1)*, service No. *Fig. 7 (2)* and serial No. *Fig. 7 (3)* off the type plate located inside the appliance on the left-hand side.

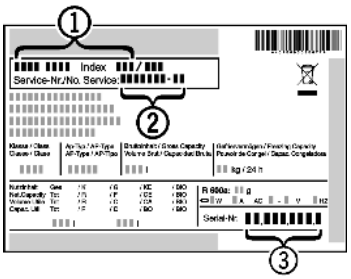

Fig. 7

- ▶ Notify the customer service, specifying the fault, appliance designation *Fig. 7 (1)*, service No. *Fig. 7 (2)* and serial No. *Fig. 7 (3)*.
- ▷ This will help us to provide you with a faster and more accurate service.
- ▶ Keep the appliance closed until the customer service arrives.
- ▷ The food will stay cool longer.
- ▶ Pull out the mains plug (not by pulling the connecting cable) or switch off the fuse.

7 Malfunctions

Your appliance is designed and manufactured for a long life span and reliable operation. If a malfunction nonetheless occurs during operation, check whether it is due to a handling error. In this case you will have to be charged for the costs incurred, even during the warranty period. You may be able to rectify the following faults yourself:

Appliance does not work.

→ The appliance is not switched on.

▶ Switch on the appliance.

→ The power plug is not properly inserted in the wall socket.

▶ Check power plug.

→ The fuse of the wall socket is not in order.

▶ Check fuse.

The compressor runs for a long time.

→ The compressor switches to a low speed when little cold is needed. Although the running time is increased as a result, energy is saved.

▶ This is normal in energy-saving models.

→ SuperFrost is activated.

▶ The compressor runs for longer in order to rapidly cool the food. This is normal.

A LED on the bottom rear of the appliance (at the compressor) flashes regularly every 15 seconds*.

→ The inverter is equipped with a diagnostic LED.

▶ The flashing is normal.

Excessive noise.

→ Due to the various speed steps, speed-regulated* compressors can generate different running noises.

▶ The sound is normal.

A bubbling and gurgling noise.

→ This noise comes from the refrigerant flowing in the refrigeration circuit.

▶ The sound is normal.

A quiet clicking noise.

→ The noise is produced whenever the refrigeration unit (motor) automatically switches on or off.

▶ The sound is normal.

A hum. It is briefly a little louder when the refrigeration unit (the motor) switches on.

→ The refrigeration increases automatically when the SuperFrost, function is activated, fresh food has just been placed in the appliance or the door has been left open for a while.

▶ The sound is normal.

→ The ambient temperature is too high.

▶ Solution: (see 1.2 Appliance range of use)

Vibration noises

→ The appliance is not standing firmly on the floor. As a result objects and adjacent units start to vibrate when the refrigerator is running.

▶ Align the appliance using the adjustable feet.

The temperature display indicates: F0 to F5.

→ There is a fault.

▶ Please contact the after-sales service (see 6 Maintenance) .

Power failure flashes in the temperature display . The highest temperature reached during power failure is indicated in the temperature display.

→ The freezer temperature rose too high over the last hours or days due to a power failure or power interruption. When the power interruption is over, the appliance will continue to operate in the last temperature setting.

▶ To cancel the display of the warmest temperature: press alarm button *Fig. 3 (9)*.

▶ Check the quality of the food. Do not consume spoiled food. Do not re-freeze thawed food.

DEMO shines in the temperature display.

→ The demo mode is activated.

▶ Please contact the after-sales service (see 6 Maintenance) .

The outer surfaces of the appliance are warm*.
→ The heat of the refrigeration circuit is used to prevent condensate from forming.
▶ This is normal.

The temperature is not cold enough.
→ The door of the appliance is not properly closed.
▶ Close the door of the appliance.
→ Insufficient ventilation.
▶ Keep ventilation grille clear, and clean it.
→ The ambient temperature is too high.
▶ Solution: (see 1.2 Appliance range of use) .
→ The appliance was opened too frequently or for too long.
▶ Wait to see whether the appliance reaches the required temperature by itself. If not, please contact the after sales service (see 6 Maintenance) .
→ Too much fresh food was placed inside without SuperFrost.
▶ Solution: (see 5.7 SuperFrost)
→ The temperature is incorrectly set.
▶ Set the temperature to a colder setting and check after 24 hours.
→ The appliance is too close to a source of heat (stove, heater etc).
▶ Change the position of the appliance or the source of heat.

Dashes ("- -") are shown on the display.
→ The freezing temperature has risen above zero degrees because of a power cut or power interruption.
▶ See also "Power failure" and ""

Concentrated collection of ice on inside face at centre of appliance cover.
→ This build-up of ice is normal. Due to physical properties, ice concentrates inside the top of the appliance.
▶ Remove the ice with a scraper tool.

EN

8 Decommissioning

8.1 Switching off the appliance

▶ Press the On/Off button *Fig. 3 (1)* until the display goes dark. Release button.
▷ If the appliance cannot be switched off, the child lock function is active (see 5.2 Child proofing) .

8.2 Taking the appliance out of service

▶ Empty the appliance.
▶ Switch off the appliance (see 8 Decommissioning) .
▶ Remove mains connector.
▶ Clean the appliance (see 6.2 Cleaning the appliance) .



▶ Leave the door open to prevent odour.

9 Disposing of the appliance



The appliance contains some reusable materials and should be disposed of properly - not simply with unsorted household refuse. Appliances which are no longer needed must be disposed of in a professional and appropriate way, in accordance with the current local regulations and laws.

When disposing of the appliance, ensure that the refrigeration circuit is not damaged to prevent uncontrolled escape of the refrigerant it contains (data on type plate) and oil.
▶ Disable the appliance.
▶ Pull out the plug.
▶ Cut through the connecting cable.

Liebherr-Hausgeräte Marica EOOD
4202 Radinovo
Bezirk Plovdiv
Bulgarien

home.liebherr.com