HSFE 1B19 B UK

12NC: F155288

GTIN (EAN) code: 5054645552887

Hotpoint



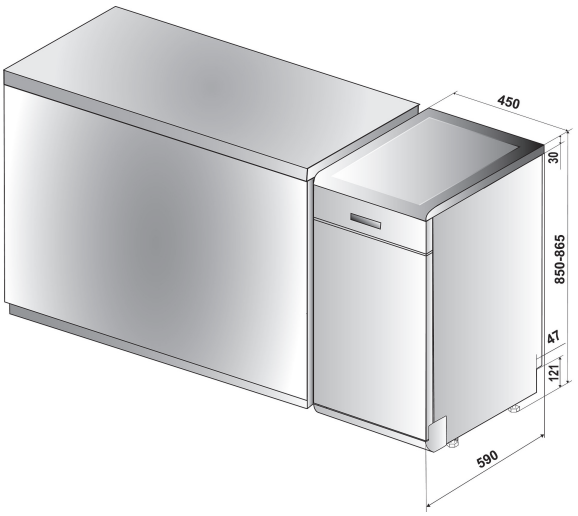

MAIN FEATURES

Construction type	Free-standing
Installation type	Free-standing
Type of control	Electronic
Type of control settings	-
Removable work top	N/A
Door decor panel	N/A
Main colour of product	Black
Electrical connection rating (W)	1900
Current (A)	13
Voltage (V)	220-240
Frequency (Hz)	50
Length of Electrical Supply Cord (cm)	130
Plug type	UK
Length inlet hose (cm)	155
Length outlet hose (cm)	150
Adjustable plinth	No
Height of removable worktop (mm)	0
Adjustable feet	Yes - all
Height of the product	85
Width of the product	45
Depth of the product	59
Depth with open door 90 degree (mm)	-
Minimum niche height	820
Maximum niche height	900
Minimum niche width	450
Maximum niche width	600
Niche depth	590
Net weight (kg)	34.9
Gross weight (kg)	36.7

TECHNICAL FEATURES

Automatic programmes	No
Maximum temperature for water intake (°C)	60
Start delay options	One time fixed
Start delay time max. (h)	8
Progress indicator	-
Digital countdown indicator	No
Salt light indicator	Yes
Rinse aid light indicator	Yes
Safety device	Yes
Adjustable upper basket	Yes, unloaded
Largest loadable dish upper basket (cm)	0
Largest loadable dish lower basket (cm)	0
Number of place settings	10

PERFORMANCES

Energy efficiency class - NEW (2010/30/EU)	A+
Energy consumption annual (kWh/annum) - NEW (2010/30/EU)	238
Duration of the left-on mode - NEW (2010/30/EU)	12
Power consumption in left-on mode - NEW (2010/30/EU)	5
Power consumption in off-mode - NEW (2010/30/EU)	0.5
Water consumption annual (l/annum) - NEW (2010/30/EU)	3220
Noise level (dB(A) re 1 pW)	49