Instructions for use

WASHER-DRYER

! This symbol reminds you to read this booklet.

GB

GB

English,1

EWDE 7145

Contents

Installation, 2-3-4-5
Unpacking and levelling
Connecting the electricity and water supplies
The first wash cycle
Technical data

Care and maintenance, 6
Cutting off the water or electricity supply
Cleaning the Washer-dryer
Cleaning the detergent dispenser drawer
Caring for the door and drum of your appliance
Cleaning the pump
Checking the water inlet hose

Precautions and tips, 7
General safety
Disposal

Description of the Washer-dryer, 8-9
Control panel
Display

How to run a wash cycle or a drying cycle, 10

Wash cycles and options, 11
Table of wash cycles
Wash options

Detergents and laundry, 12
Detergent dispenser drawer
Preparing the laundry
Fast daily cycles
Special wash cycles
Load balancing system

Troubleshooting, 13-14

Product Guarantee and Repair Information, 15

INDESIT

Installation

GB

! Keep this instruction manual in a safe place for future reference. Should the appliance be sold, transferred or moved, make sure the instruction manual accompanies the washer-dryer to inform the new owner as to its operation and features.
! Read these instructions carefully: they contain vital information on installation, use and safety.

Unpacking and levelling

Unpacking

1. Unpack the washer-dryer.
2. Check whether the washer-dryer has been damaged during transport. If this is the case, do not install it and contact your retailer.

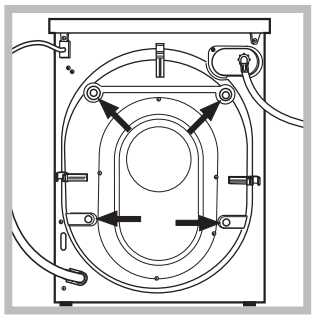

3. Remove the **4** protective screws and the rubber bush with the respective spacer, situated on the rear of the appliance *(see also the installation leaflet).*

4. Seal the gaps using the plastic plugs provided.
5. Keep all the parts: you will need them again if the washer-dryer needs to be moved to another location.
! Packaging materials are not children's toys.

Levelling

Your machine may make a considerable amount of noise if the two front feet have not been adjusted correctly.
1. Install the washer-dryer on a flat sturdy floor, without resting it up against walls, furniture cabinets or other.

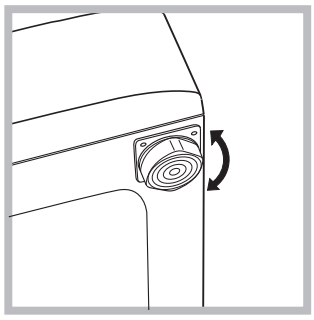

2. If the floor is not perfectly level, compensate for any unevenness by tightening or loosening the adjustable front feet *(see figure)*; the angle of inclination, measured according to the worktop, must not exceed 2°.

Levelling your appliance correctly will provide it with stability and avoid any vibrations, noise and shifting during operation. If it is placed on a fitted or loose carpet, adjust the feet in such a way as to allow enough room for ventilation beneath the washer-dryer.

Electric and water connections

Connecting the water inlet hose

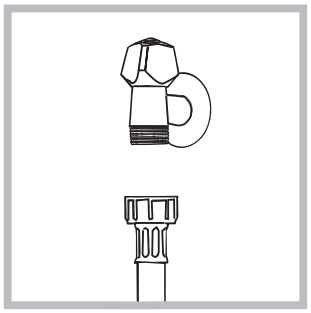

1. Connect the supply pipe by screwing it to a cold water tap using a 3/4 gas threaded connection *(see figure).* Before performing the connection, allow the water to run freely until it is perfectly clear.

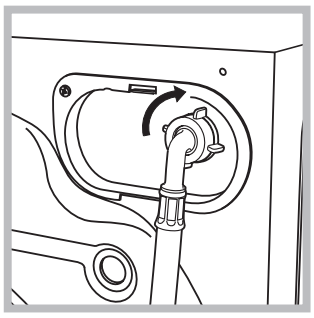

2. Connect the other end of the water inlet hose to the washer-dryer, screwing it onto the appliance's cold water inlet, situated on the top right-hand side on the rear of the appliance *(see figure).*

3. Make sure there are no kinks or bends in the hose.

! The water pressure at the tap must be within the values indicated in the Technical details table *(on the page 5).*

! If the water inlet hose is not long enough, contact a specialist store or an authorised serviceman.

! Ensure that the supply taps are allowing water through. Old taps may seize in the closed position and thus prevent water reaching the machine.

Connecting the drain hose

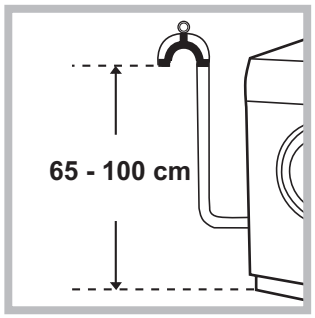

Connect the drain hose, without bending it, to a draining duct or a wall drain situated between 65 and 100 cm from the floor;

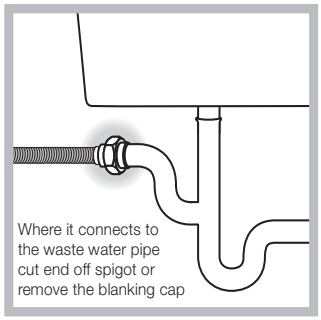

The drain hose may be connected to an under-sink trap. Before connecting the drain hose from the machine ensure that any blanks or removable ends have been taken off the spigot.

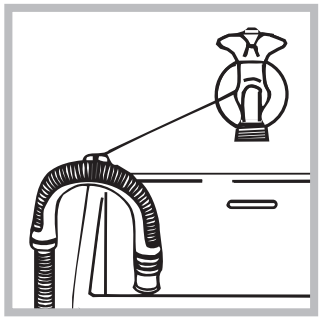

If it is placed over the edge of a basin or sink be sure the free end of the hose should not be underwater.

! We advise against the use of hose extensions; in case of absolute need, the extension must have the same diameter as the original hose and must not exceed 150 cm in length. Ensure that if the drain hose is pushed into a standpipe, that the end does not go down more than 15cms (6 inches). If the hose is pushed down too far, this may cause the machine to self -syphon ie. continuously empty as it is filling.

Electric connection

Before plugging the appliance into the mains socket, make sure that:

- the socket is earthed and in compliance with the applicable law;

- the socket is able to sustain the appliance's maximum power load indicated on the Technical Data Plate fixed on the machine;

- the supply voltage is included within the values indicated on the Technical Data Plate fixed on the machine.

- the socket is compatible with the washer-dryer's plug. If this is not the case, replace the socket or the plug.

Your appliance is now supplied with a 13 amp fused plug it can be plugged into a 13 amp socket for immediate use. Before using the appliance please read the instructions below.

WARNING - THIS APPLIANCE MUST BE EARTHED.
THE FOLLOWING OPERATIONS SHOULD BE CARRIED OUT BY A QUALIFIED ELECTRICIAN.

Replacing the fuse:
When replacing a faulty fuse, a 13 amp ASTA approved fuse to BS 1362 should always be used, and the fuse cover re-fitted. If the fuse cover is lost, the plug must not be used until a replacement is obtained.
Replacement fuse covers:
If a replacement fuse cover is fitted, it must be of the correct colour as indicated by the coloured marking or the colour that is embossed in words on the base of the plug. Replacements can be obtained directly from your nearest Service Depot.

Removing the plug:
If your appliance has a non-rewireable moulded plug and you should wish to re-route the mains cable through partitions, units etc., please ensure that either:
the plug is replaced by a fused 13 ampere rewireable plug bearing the BSI mark of approval.
or:
the mains cable is wired directly into a 13 amp cable outlet, controlled by a switch, (in compliance with BS 5733) which is accessible without moving the appliance.

Disposing of the plug:
Ensure that before disposing of the plug itself, you make the pins unusable so that it cannot be accidentally inserted into a socket.

Instructions for connecting cable to an alternative plug:
Important: the wires in the mains lead are coloured in accordance with the following code:

Green & Yellow	**Earth**
Blue	**Neutral**
Brown	**Live**

As the colours of the wires in the lead may not correspond with the coloured markings identifying the terminals in your plug, proceed as follows:
Connect Green & Yellow wire to terminal marked E or ⏚ or coloured Green or Green & Yellow.
Connect Brown wire to terminal marked L or coloured Red.
Connect Blue wire to terminal marked N or coloured Black.
If a 13 amp plug (BS 1363) is used it must be fitted with a 13 amp fuse, either in the plug or adaptor or at the distribution board.
If you are in any doubt regarding the electrical supply to your machine, consult a qualified electrician before use.
How to connect an alternative plug:
The wires in this mains lead are coloured in accordance with the following code:

BLUE	**NEUTRAL (N)**
BROWN	**LIVE (L)**
GREEN & YELLOW	**EARTH (E)**

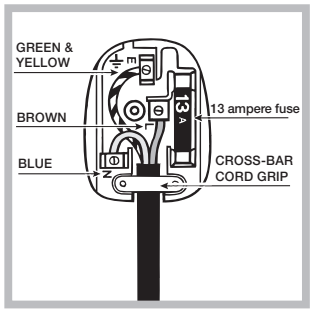

Disposing of the appliance:
When disposing of the appliance please remove the plug by cutting the mains cable as close as possible to the plug body and dispose of it as described above.

! The washer-dryer should not be installed in an outdoor environment, not even where the area is sheltered, because it may be very dangerous to leave it exposed to damp, rain and thunderstorms.

! When the washer-dryer is installed, the mains socket must be within easy reach.

! Do not use extensions or multiple sockets.

! The power supply cable must never be bent or dangerously compressed.

! The power supply cable must only be replaced by an authorised serviceman.

Warning! The company denies all liability if and when these norms are not respected.

The first wash cycle

Once the appliance has been installed, and before you use it for the first time, run a wash cycle with detergent and no laundry, using the wash cycle “Auto Clean” *(see “Cleaning the washer-dryer”).*

Technical data	
Model	EWDE 7145
Dimensions	width 59.5 cm height 85 cm depth 53,5 cm
Capacity	from 1 to 7 kg for the wash programme from 1 to 5 kg for the drying programme
Electrical connections	please refer to the technical data plate fixed to the machine
Water connections	maximum pressure 1 MPa (10 bar) minimum pressure 0.05 MPa (0.5 bar) drum capacity 58 litres
Spin speed	up to 1400 rotations per minute
Energy rated programmes according to regulation EN 50229	**Wash**: programme 10; temperature 60°C; using a load of 7 kg. **Drying:** select the 10 wash programme and set the drying level to “A4”, for both loads. The first drying cycle must be carried out with the nominal load.
CE	This appliance conforms to the following EC Directives: - EMC 2014/30/EU (Electromagnetic Compatibility) - LVD 2014/35/EU (Low Voltage) - 2012/19/EU - (WEEE)

Care and maintenance

GB

Cutting off the water and electricity supplies

- Turn off the water tap after every wash cycle. This will limit wear on the hydraulic system inside the washer-dryer and help to prevent leaks.
- Unplug the washer-dryer when cleaning it and during all maintenance work.

Cleaning the washer-dryer

- The outer parts and rubber components of the appliance can be cleaned using a soft cloth soaked in lukewarm soapy water. Do not use solvents or abrasives.
- The washer-dryer has a "Auto Clean" programme for its internal parts that **must be run with no load in the drum**.

For maximum performance you may want to use either the detergent (i.e. a quantity 10% the quantity specified for lightly-soiled garments) or special additives to clean the washer-dryer. We recommend running a cleaning programme every 40 wash cycles.
To start the programme press buttons **A** and **B** simultaneously for 5 seconds *(see figure).*
The programme will start automatically and will last approximately 70 minutes.

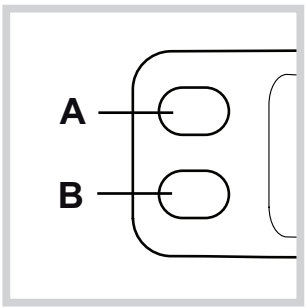

Cleaning the detergent dispenser drawer

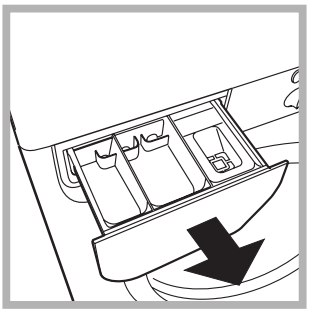

Remove the dispenser by raising it and pulling it out (*see figure*). Wash it under running water; this operation should be repeated frequently.

Caring for the door and drum of your appliance

- Always leave the porthole door ajar in order to prevent unpleasant odours from forming.

Cleaning the pump

The washer-dryer is fitted with a self-cleaning pump which does not require any maintenance. Sometimes, small items (such as coins or buttons) may fall into the pre-chamber which protects the pump, situated in its bottom part.

! Make sure the wash cycle has finished and unplug the appliance.

To access the pre-chamber:

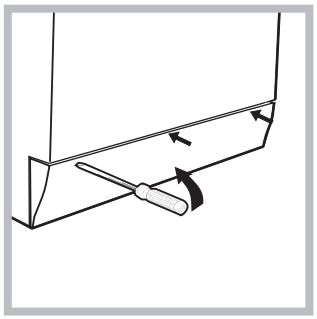

1. using a screwdriver, remove the cover panel on the lower front part of the washer-dryer (*see figure);*

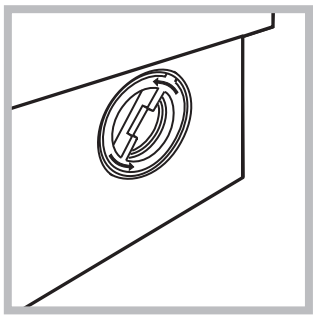

2. unscrew the lid by rotating it anticlockwise (*see figure):* a little water may trickle out. This is perfectly normal;

3. clean the inside thoroughly;
4. screw the lid back on;
5. reposition the panel, making sure the hooks are securely in place before you push it onto the appliance.

Checking the water inlet hose

Check the inlet hose at least once a year. If there are any cracks, it should be replaced immediately: during the wash cycles, water pressure is very strong and a cracked hose could easily split open.

! Never use second-hand hoses.

Precautions and tips

INDESIT

GB

! This washer-dryer was designed and constructed in accordance with international safety regulations. The following information is provided for safety reasons and must therefore be read carefully.

General safety

- This appliance was designed for domestic use only.
- This appliance can be used by children aged from 8 years and above and persons with reduced physical, sensory or mental capabilities or lack of experience and knowledge if they have been given supervision or instruction concerning use of the appliance in a safe way and understand the hazards involved. Children shall not play with the appliance. Cleaning and user maintenance shall not be made by children without supervision.
  – Do not dry unwashed items in the tumble dryer.
  – Items that have been soiled with substances such as cooking oil, acetone, alcohol, petrol, kerosene, spot removers, turpentine, waxes and wax removers should be washed in hot water with an extra amount of detergent before being dried in the tumble dryer.
  – Items such as foam rubber (latex foam), shower caps, waterproof textiles, rubber backed articles and clothes or pillows fitted with foam rubber pads should not be dried in the tumble dryer.
  – Fabric softeners, or similar products, should be used as specified by the fabric softener instructions.
  – The final part of a tumble dryer cycle occurs without heat (cool down cycle) to ensure that the items are left at a temperature that ensures that the items will not be damaged.
  WARNING: Never stop a tumble dryer before the end of the drying cycle unless all items are quickly removed and spread out so that the heat is dissipated.
- Do not touch the machine when barefoot or with wet or damp hands or feet.
- Do not pull on the power supply cable when unplugging the appliance from the electricity socket. Hold the plug and pull.
- Do not open the detergent dispenser drawer while the machine is in operation.
- Do not touch the drained water as it may reach extremely high temperatures.
- Never force the porthole door. This could damage the safety lock mechanism designed to prevent accidental opening.
- If the appliance breaks down, do not under any circumstances access the internal mechanisms in an attempt to repair it yourself.
- Always keep children well away from the appliance while it is operating.
- The door can become quite hot during the wash cycle.
- If the appliance has to be moved, work in a group of two or three people and handle it with the utmost care. Never try to do this alone, because the appliance is very heavy.
- Before loading laundry into the washer-dryer, make sure the drum is empty.
- During the drying phase, the door tends to get quite hot.
- Do not use the appliance to dry clothes that have been washed with flammable solvents (e.g. trichlorethylene).
- Do not use the appliance to dry foam rubber or similar elastomers.
- Make sure that the water tap is turned on during the drying cycles.
- Children of less than 3 years should be kept away from the appliance unless continuously supervised.
- Remove all objects from pockets such as lighters and matches.

Disposal

- Disposing of the packaging materials: observe local regulations so that the packaging may be re-used.
- The European Directive 2012/19/EU - WEEE on Waste Electrical and Electronic Equipment, requires that old household electrical appliances must not be disposed of in the normal unsorted municipal waste stream. Old appliances must be collected separately in order to optimise the recovery and recycling of the materials they contain and reduce the impact on human health and the environment. The crossed out “wheeled bin” symbol on the product reminds you of your obligation, that when you dispose of the appliance it must be separately collected.
  Consumers should contact their local authority or retailer for information concerning the correct disposal of their old appliance.

Description of the Washer-dryer

GB

Control panel

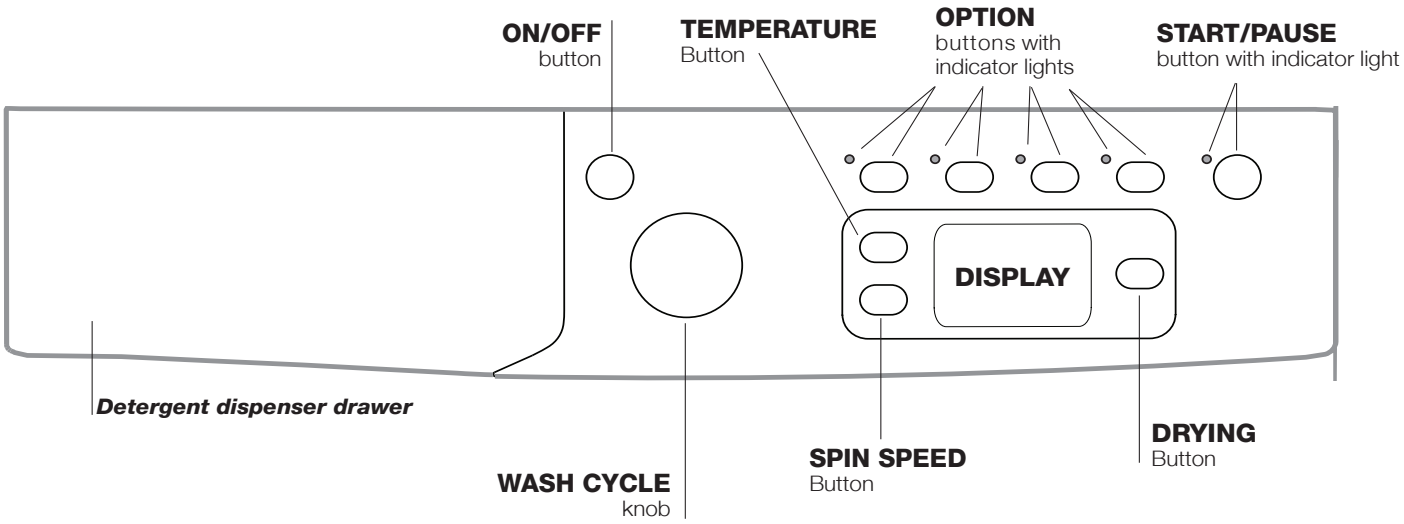

Detergent dispenser drawer: used to dispense detergents and washing additives (*see "Detergents and laundry"*).

ON/OFF button **:** press this briefly to switch the machine on or off. The START/PAUSE indicator light, which flashes slowly in a green colour shows that the machine is switched on. To switch off the Washer-dryer during the wash cycle, press and hold the button for approximately 2 seconds; if the button is pressed briefly or accidentally the machine will not switch off. If the machine is switched off during a wash cycle, this wash cycle will be cancelled.

WASH CYCLE knob**:** used to set the desired wash cycle *(see "Table of wash cycles").*

OPTION buttons with indicator light**:** used to select the available options. The indicator light corresponding to the selected option will remain lit.

SPIN button **:** press to reduce or completely exclude the spin cycle - the value is indicated on the display.

TEMPERATURE button **:** press to decrease or completely exclude the temperature: the value will be shown on the display.

DRYING button **:** press to decrease or exclude drying; the selected drying level or time will appear on the display *(see "How to run a wash cycle or a drying cycle").*

START/PAUSE button with indicator light: when the green indicator light flashes slowly, press the button to start a wash cycle. Once the cycle has begun the indicator light will remain lit in a fixed manner. To pause the wash cycle, press the button again; the indicator light will flash in an orange colour. If the symbol is not illuminated, the door may be opened (wait approximately 3 minutes). To start the wash cycle from the point at which it was interrupted, press the button again.

Standby mode
This washing machine, in compliance with new energy saving regulations, is fitted with an automatic standby system which is enabled after about 30 minutes if no activity is detected. Press the ON-OFF button briefly and wait for the machine to start up again.
Consumption in off-mode: 0,5 W
Consumption in Left-on: 8 W

Display

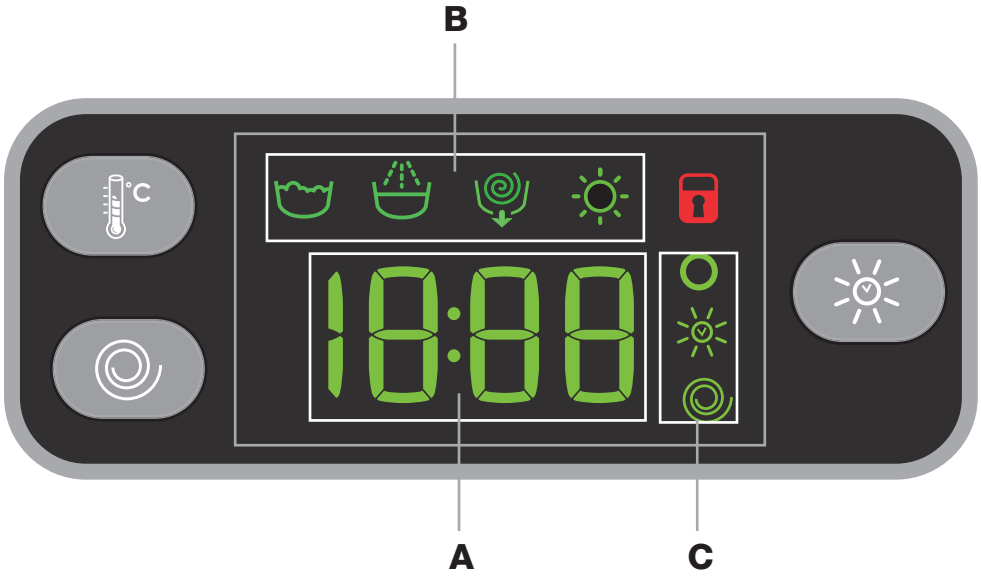

The display is useful when programming the machine and provides a great deal of information.

The duration of the available programmes and the remaining time of a running cycle appear in section **A**; if the DELAY START option has been set, the countdown to the start of the selected programme will appear. Furthermore, pressing the corresponding button allows you to view the maximum temperature, spin speed and drying level or time values attained by the machine during the selected cycle.

The phases scheduled for the selected cycle and, once the cycle has begun, the current phase of the wash cycle (and drying cycle, if applicable) appear in section **B**.
Wash
Rinse
Spin / Drain
Drying

The icons corresponding to “temperature” O, “Drying” and “spin” appear in section **C** from top to bottom:
If the O symbol lights up, the display will visualise the set “temperature” value.
The symbol lights up while the drying settings are being adjusted.
If the symbol lights up, the display will visualise the set “spin” value.

Door locked symbol

The lit symbol indicates that the door is locked. To prevent any damage, wait until the symbol turns off before opening the door (wait approximately 3 minutes).
To open the door while a cycle is in progress, press the START/PAUSE button; if the DOOR LOCKED symbol is switched off the door may be opened (wait approximately 3 minutes).

How to run a wash cycle or a drying cycle

GB

1. **SWITCH THE MACHINE ON.** Press the ⏻ button; the START/PAUSE indicator light will flash slowly in a green colour.
2. **LOAD THE LAUNDRY.** Open the porthole door. Load the laundry, making sure you do not exceed the maximum load value indicated in the table of programmes on the following page.
3. **MEASURE OUT THE DETERGENT.** Pull out the detergent dispenser drawer and pour the detergent into the relevant compartments as described in *"Detergents and laundry".*
4. **CLOSE THE DOOR.**
5. **SELECT THE WASH CYCLE.** Set the WASH CYCLE knob to the desired programme; a temperature and spin speed is set for each wash cycle; these may be adjusted. The duration of the cycle will appear on the display.
6. **CUSTOMISE THE WASH CYCLE.** Use the relevant buttons:

   Modifying the temperature and/or spin speed.
   The machine automatically displays the maximum temperature and spin speed values set for the selected cycle, or the most recently-used settings if they are compatible with the selected cycle. The temperature can be decreased by pressing the °C button, until the cold wash "OFF" setting is reached. The spin speed may be progressively reduced by pressing the ◎ button, until it is completely excluded (the "OFF" setting). If these buttons are pressed again, the maximum values are restored.
   ! Exception: if the **2** programme is selected, the temperature can be increased up to a value of 60°C.

   Setting the drying cycle
   The first time the button is pressed, the machine will automatically select the maximum drying cycle which is compatible with the selected wash cycle. Subsequent presses will decrease the drying level and then the drying time, until the cycle is excluded completely ("OFF").
   Drying may be set as follows:
   A- Based on the desired laundry dryness level:
   Iron dry: suitable for clothes which will need ironing afterwards. the remaining dampness softens creases, making them easier to remove; "**A1**" appears on the display.
   Hanger dry: ideal for clothes which do not need to be dried fully; "**A2**" appears on the display.
   Cupboard dry: suitable for laundry which can be put back in a cupboard without being ironed; "**A3**" appears on the display.
   Extra dry: suitable for garments which need to be dried completely, such as sponges and bathrobes "**A4**"; appears on the display.

   B - Based on a set time period: between **30** and **180** minutes.
   If your laundry load to be washed and dried is much greater than the maximum stated load (see adjacent table), perform the wash cycle, and when the cycle is complete, divide the garments into groups and put some of them back in the drum. At this point, follow the instructions provided for a "**Drying only**" cycle. Repeat this procedure for the remainder of the load.
   N.B: a cooling-down period is always added to the end of each drying cycle.

   Drying only
   Use the cycle selector knob to select a drying cycle (**15-16**) in accordance with the type of fabric. The desired drying level or time may also be set using the DRYING button.

   Modifying the cycle settings.
   - Press the button to enable the option; the indicator light corresponding to the button will switch on.
   - Press the button again to disable the option; the indicator light will switch off.

   ! If the selected option is not compatible with the programmed wash cycle, the indicator light will flash and the option will not be activated.
   ! If the selected option is not compatible with another option which has been selected previously, the indicator light corresponding to the first option selected will flash and only the second option will be activated; the indicator light corresponding to the enabled option will remain lit.
   ! The options may affect the recommended load value and/or the duration of the cycle.
7. **START THE PROGRAMME.** Press the START/PAUSE button. The corresponding indicator light will become green, remaining lit in a fixed manner, and the door will be locked (the DOOR LOCKED symbol will be on). To change a wash cycle while it is in progress, pause the Washer-dryer using the START/PAUSE button (the START/PAUSE indicator light will flash slowly in an orange colour); then select the desired cycle and press the START/PAUSE button again. To open the door while a cycle is in progress, press the START/PAUSE button; if the DOOR LOCKED symbol is switched off the door may be opened (wait approximately 3 minutes). Press the START/PAUSE button again to restart the wash cycle from the point at which it was interrupted.
8. **THE END OF THE WASH CYCLE.** This will be indicated by the text "**End**" on the display; when the DOOR LOCKED symbol switches off the door may be opened (wait approximately 3 minutes). Open the door, unload the laundry and switch off the machine.

! If you wish to cancel a cycle which has already begun, press and hold the ⏻ button. The cycle will be stopped and the machine will switch off.

Wash cycles and options

INDESIT

GB

Table of wash cycles

Wash cycles	Description of the wash cycle	Max. temp. (°C)	Max. speed (rpm)	Drying	Detergents		Max. load (kg)	Cycle duration
					Main wash	Fabric softener		
	EVERYDAY FAST							The duration of the wash cycles can be checked on the display.
1	**Mix Coloured 59'**	40°	1000	●	●	●	7	
2	**Synthetics 59'**	40° (Max. 60°)	1000	●	●	●	4,5	
3	**Cotton 45'**	40°	1200	●	●	●	3,5	
4	**Wash&Dry 90'**	30°	1200	●	●	●	2	
5	**Wash&Dry 45'**	30°	1400	●	●	●	1	
6	**AirFresh 30'**	-	-	●	-	-	1,5	
	Special							
7	**Wool:** for wool, cashmere, etc.	40°	800	●	●	●	2	
8	**Delicates**	30°	0	●	●	●	1	
9	**Gym Kit**	40°	600	●	●	●	3,5	
10	**Eco Cotton 60° (1):** heavily soiled whites and resistant colours.	60°	1400	●	●	●	7	
10	**Eco Cotton 40° (2):** lightly soiled whites and delicate colours.	40°	1400	●	●	●	7	
11	**Cotton:** extremely soiled whites.	90°	1400	●	●	●	7	
	Partial							
12	**Rinse**	-	1400	●	-	●	7	
13	**Spin**	-	1400	●	-	-	7	
14	**Drain**	-	0	-	-	-	7	
15	**Dry Cotton**	-	-	●	-	-	5	
16	**Dry Synthetics**	-	-	●	-	-	4	

The length of cycle shown on the display or in this booklet is an estimation only and is calculated assuming standard working conditions. The actual duration can vary according to factors such as water temperature and pressure, the amount of detergent used, the amount and type of load inserted, load balancing and any wash options selected.

For all Test Institutes:
1) Test wash cycle in compliance with regulations EN 50229: set wash cycle 10 with a temperature of 60°C.
2) Long wash cycle for cottons: set wash cycle 10 with a temperature of 40°C.

Wash options

- If the selected option is not compatible with the programmed wash cycle, the indicator light will flash and the option will not be activated.
- If the selected option is not compatible with another option which has been selected previously, the indicator light corresponding to the first option selected will flash and only the second option will be activated; the indicator light corresponding to the enabled option will remain lit.

Extra Wash

Enable the Extra Wash option for very dirty items, where compatible. Press this option to let the cycle automatically re-adjust all wash parameters through a longer lasting cycle. The option always leaves the temperature unchanged, while the spin cycle is automatically brought back to maximum levels. The user can set the spin cycle back to the desired value at any time.

Easy Iron

By selecting this function, the wash and spin cycles will be modified in order to reduce the formation of creases. At the end of the cycle the washing machine will perform slow rotations of the drum; the indicator lights for the EASY IRON and START/PAUSE options will flash (the first one green, the second orange).
To end the cycle, press the START/PAUSE button or the EASY IRON button.
Note: If you also want to run the drying cycle, this option is enabled only if combined with level **"A1"(Iron dry)**.

Extra Rinse

By selecting this option, the efficiency of the rinse is increased and optimal detergent removal is guaranteed. It is particularly useful for sensitive skin.

Delay Timer

To set a delayed start for the selected cycle, press the corresponding button repeatedly until the required delay period has been reached. When this option is enabled, the corresponding indicator light will remain lit. To remove the delayed start setting, press the button until the text "OFF" appears on the display.

Detergents and laundry

GB

Detergent dispenser drawer

Good washing results also depend on the correct dose of detergent: adding too much detergent will not necessarily result in a more efficient wash, and may in fact cause build up on the inside of your appliance and contribute to environmental pollution.

! Use powder detergent for white cotton garments, for pre-washing, and for washing at temperatures over 60°C.

! Follow the instructions given on the detergent packaging.

! Do not use hand washing detergents because these create too much foam.



Open the detergent dispenser drawer and pour in the detergent or washing additive, as follows.

! Do not put the detergent into compartment **1**.

! The detergent must be put only in the compartment **2**.

compartment 2: Detergent for the wash cycle (powder or liquid)

Liquid detergent should only be poured in immediately prior to the start of the wash cycle.

compartment 3: Additives (fabric softeners, etc.)

The fabric softener should not overflow the grid.

Note: If a "tablet detergent" is used, always follow the manufacturer's instructions.

Preparing the laundry

- Divide the laundry according to:
  - the type of fabric/the symbol on the label
  - the colours: separate coloured garments from whites.
- Empty all garment pockets and check the buttons.
- Do not exceed the values listed in the "Table of wash cycles", which refer to the weight of the laundry when dry.

How much does your laundry weigh?

1 sheet 400-500 g
1 pillow case 150-200 g
1 tablecloth 400-500 g
1 bathrobe 900-1200 g
1 towel 150-250 g

Fast daily cycles

A complete set of fast programmes to wash the most commonly used fabrics - even with a full load - and to remove the most frequent daily dirt in less than 1 hour.

Mix Coloured 59': to wash mixed and coloured items together.

Synthetics 59': specific for synthetic items. If the dirt is difficult to remove, the temperature can be increased up to 60° and powder detergent can be used too.

Cotton 45': short cycle designed to wash delicate cotton items.

Special wash cycles

Wash&Dry 90': The cycle guarantees the washing and drying performances for a 2 kg load in 90 minutes (level **"A1" Iron dry)**; for larger loads, the cycle's duration increases in order to guarantee the cycle performances.

Wash&Dry 45': select programme **5** for washing and drying lightly soiled garments (Cotton and Synthetic) in a short time. This cycle may be used to wash and dry a laundry load of up to 1 kg in just 45 minutes (level **"A1" Iron dry**). To achieve optimum results, use liquid detergent and pre-treat cuffs, collars and stains.

AirFresh 30' (programme **6**) ideal cycle to refresh garments and remove bad odours, in particular smoke, from cotton and synthetic items in 30' (max 1.5kg) without the washing phase.

Wool: all wool garments can be washed using programme **7**, even those carrying the "hand-wash only" label. For best results, use special detergents and do not exceed 2 kg of laundry.

Delicates: use programme **8** to wash very delicate garments. It is advisable to turn the garments inside out before washing them. For best results, use liquid detergent on delicate garments.

To wash **Silk** garments and **Curtains** select cycle **8** and then option "EASY IRON"; the machine will end the cycle while the laundry is soaking and the "EASY IRON" indicator light will flash. To drain the water so that the laundry may be removed, press the START/PAUSE button or the "EASY IRON" button.

When selecting an exclusively time-based drying function, a drying cycle is performed at the end of the wash cycle that is particularly delicate, thanks to light handling and appropriate temperature control of the water jet.

The recommended durations are:

1 kg of synthetic garments --> 150 min
1 kg of synthetic and cotton garments --> 180 min
1 kg of cotton garments --> 180 min

The degree of dryness depends on the load and fabric composition.

Gym Kit: cycle suitable to wash all sports items together, including gym towels, while respecting their fibres (follow the instructions in the garment labels).

Load balancing system

Before every spin cycle, to avoid excessive vibrations and to distribute the load in a uniform manner, the drum rotates continuously at a speed which is slightly greater than the washing rotation speed. If, after several attempts, the load is not balanced correctly, the machine spins at a reduced spin speed. If the load is excessively unbalanced, the Washer-dryer performs the distribution process instead of spinning. To encourage improved load distribution and balance, we recommend small and large garments are mixed in the load.

Troubleshooting

INDESIT

GB

Your Washer-dryer could fail to work. Before contacting the Technical Assistance Centre (*see "Assistance"*), make sure that the problem cannot be solved easily using the following list.

Problem:	Possible causes / Solutions:
The machine does not switch on.	• The appliance is not plugged into the socket fully, or not enough to make contact. • There is no power to the socket, or the fuse has blown in the mains plug.
The wash cycle does not start.	• The door is not closed properly. • The ON/OFF button has not been pressed. • The START/PAUSE button has not been pressed. • The water tap has not been turned on to allow water to flow into the machine. • A delayed start has been set.
The machine does not dry.	• Check the 2 sections above. • The 'DRY' button has been pressed to exclude drying.
The clothes are too hot when the drying cycle is finished.	• A cooling-down period is always added to the end of each drying cycle. If the clothes appear too hot to handle leave the door open to allow to cool further before removing from the machine.
The machine does not fill with water or 'H2o' is shown in the display window.	• The water inlet hose is kinked. • The water inlet hose is not connected to the water supply. • The water pressure is too low. • The water tap has not been turned on to allow water to flow into the machine. • There is no water supply to the house. • The inlet valve filter is blocked. • The START/PAUSE button has not been pressed.
The machine continuously fills with water and continually drains away or Water left in the drum or Stuck on wash.	• The top of the drain hose is too low - It must be fitted at a height between 65 and 100 cm from the floor *(see "Installation")*. • The drain hose is connected incorrectly to the sink trap allowing water to run into the machine, the drain hose must be positioned higher than the bottom of the sink to prevent water flowing down the drain hose. • The end of the drain hose has been pushed too far down the standpipe, the 'U' bracket should be fitted 100 mm from the end of the drain hose.
The machine does not drain or spin (error lights flashing).	• The Pump filter is blocked. • The "Easy iron" option has been activated: To complete the wash cycle, press the START/PAUSE button (*see "Wash cycles and options"*). • The drain hose is kinked *(see "Installation")*. • *New Installation* - The blanking cap or spigot has not been removed if connected under a sink. • The drain hose or sink trap is blocked.
The wash programme takes too long.	• Programme times will vary due to water pressure, the incoming water temperature and if the wash load goes out of balance. This will increase the programme times accordingly *(see ' The machine wont spin properly' next page)* - (Most Common Cause!).
The Display sticks at one 'time to end' for more than 1 Minute or the Display changes the estimated 'Time to End' during the programme.	• The display time is for guidance only - ***it is not a precise time to finish and may vary.***
The machine vibrates a lot during the spin cycle.	• The feet have not been adjusted, enabling the machine to rock. • *New Installation* - Either the Transit Bolts including the plastic spacers, or the Polystyrene Packaging have not been removed when installing the machine. • The machine is trapped between cabinets and/or walls. • The load is in a slight out of balance condition and machine is spinning, but at a lower speed.

The machine is noisy.	• There will always be some motor, pump and drum noise during spin.
The machine wont spin properly.	• Out of Balance detected when attempting to go into a spin cycle - If this happens the machine will continue to try to repeat the distribution of the load required before the machine will go into higher spin speeds - This will increase the programme time accordingly. This is a safety feature to prevent damage. Out of Balance can be caused by washing a single heavy item (eg duvet, quilt, etc). - Try the programme again using a different load.
The machine leaks from the dispenser.	• The dispenser drawer is blocked with detergent and requires cleaning. • The water pressure is too high and requires turning down - turn down the tap on the water supply pipe slightly and try again. • The machine is tilting forwards - It must be level when in its final position.
The machine leaks (other than dispenser).	• The fill hose is loose, check both the cabinet and tap ends. • The fill hose is tight but still leaks, if so replace the rubber washers, or the fill hose is missing the rubber washer. • The drain hose is not fixed in properly.
The option lights and the START/ PAUSE indicator light flash while one of the wash cycle progress and DOOR LOCKED lights are lit in a fixed manner.	• Switch off the machine and unplug it, wait for approximately 1 minute and then switch back on again. If the problem persists contact Technical Assistance Centre.
The machine smells.	• The machine requires a service wash. Run a n° 1 wash cyclee with detergent and no laundry.
The machine door cannot be opened.	• The door will not open until the door lock indicator light goes out shortly after the program has finished.
Door Seal damaged at the bottom.	• The door seal has drainage holes at the bottom - This is normal.
The water level is too low when the machine is washing.	• The water level is correct if it can be seen at the bottom of the door.
There is too much foam.	• The detergent is not suitable for machine washing (it should display the text 'for washing machines' or 'hand and machine wash' or the like). • Too much detergent was used - less detergent is required in soft water.
After completing the programme, or before starting a programme, the machine has turned itself off (no lights).	• To comply with new energy saving regulations the machine is fitted with an automatic standby system. Press 'ON/OFF' button for 3 seconds to activate the machine, it can then either be switched off or a new programme selected.
General.	• Your washing machine contains sensors that monitor progress during the wash cycle (eg: Water Levels, Temperatures, Out of Balance loads, Wash time/progress). Normally, if your machine successfully completes the cycle, there is unlikely to be anything wrong!

Remember, you will be charged for a service call for problems caused by incorrect installation, as indicated on pages 2 to 4.

Not emptying contents from pockets may cause pump or drain blockages, or may damage the machine.

Do not wash items which do not have a wash label, or wash items that are not intended as machine washable.

Product Guarantee and Repair Information

INDESIT

GB

Guarantee

12 Months Parts and Labour Guarantee

Your appliance has the benefit of our manufacturer's guarantee, which covers the cost of breakdown repairs for twelve months from the date of purchase. This gives you the reassurance that if, within that time, your appliance is proven to be defective because of either workmanship or materials, we will, at our discretion, either repair or replace the appliance at no cost to you:

This guarantee is subject to the following conditions:

- The appliance has been installed and operated correctly and in accordance with our operating and maintenance instructions.
- The appliance is used only on the electricity or gas supply printed on the rating plate.
- The appliance has been used for normal domestic purposes only.
- The appliance has not been altered, serviced, maintained, dismantled, or otherwise interfered with by any person not authorised by us.
- Any repair work must be undertaken by us or our appointed agent.
- Any parts removed during repair work or any appliance that is replaced become our property.
- The appliance is used in the United Kingdom or Republic of Ireland.

The guarantee does not cover:

- Damage resulting from transportation, improper use, neglect or interference or as a result of improper installation.
- Replacement of any consumable item or accessory. These include but are not limited to: plugs, cables, batteries, light bulbs, fluorescent tubes and starters, covers and filters.
- Replacement of any removable parts made of glass or plastic.

THIS GUARANTEE WILL NOT APPLY IF THE APPLIANCE HAS BEEN USED IN COMMERCIAL OR NON-DOMESTIC PREMISES.

Recycling and Disposal Information

As part of Indesit's continued commitment to helping the environment, Indesit reserves the right to use quality, recycled components to keep down customer costs and minimise material wastage.

Please dispose of packaging and old appliances carefully. To minimise the risk of injury to children, remove the door, plug, and cut the mains cable off flush with the appliance. Dispose of these parts separately to ensure that the appliance can no longer be plugged into mains socket, and the door cannot be locked shut.

Repairs and After Sales

For product help and advice, repairs, spare parts or accessories, we're here to help.

For local repair engineers - **03448 111 606**
ROI - **0818 313 413**

UK standard local rate applies
ROI local Irish rate applies

For Parts and Accessories visit:
parts.indesit.co.uk/shop

Please remember to register your appliance at **www.indesitservice.co.uk** to activate your 10 year parts guarantee.

How to find your model and serial number:

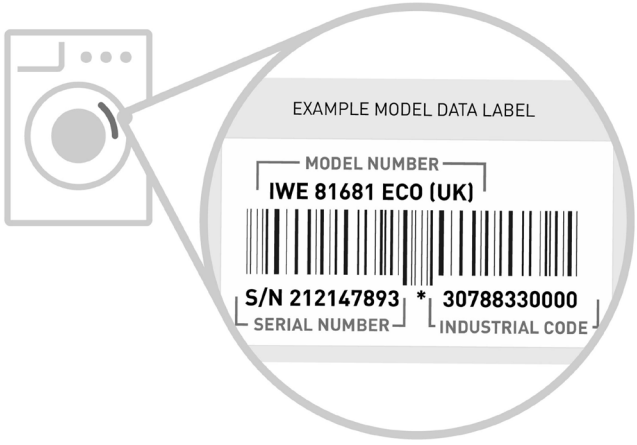

GB

Indesit Company Spa
Viale Aristide Merloni, 47
60044 Fabriano (AN)
Italy
www.indesit.co.uk