DFP 27T94

GB English

Operating instructions

DISHWASHER - Contents

Operating instructions, 1
Precautions and advice, 2-3
Product Data, 3
Installation, 4-5
Electrical connection, 6
Description of the appliance, 7
Refined salt and rinse aid, 8
Loading the racks, 9-10
Detergent and dishwasher use, 11
Wash cycles, 12
Special wash cycles and options, 13
Care and maintenance, 14
Troubleshooting, 15
Product Guarantee and Repair Information,16

INDESIT

GB

Precautions and advice

⚠ This appliance was designed and manufactured in compliance with international safety standards. The following information has been provided for safety reasons and should be read carefully.

Keep this instruction manual in a safe place for future reference. If the appliance is sold, given away or moved, make sure the manual is kept with the machine.

Read the instructions carefully, as they include important information on safe installation, use and maintenance.

This appliance was designed for domestic use or similar applications, for example:
- use by guests in hotels, motels and other residential settings;
- bed & breakfasts.

Remove the appliance from all packaging and make sure it was not damaged during transportation. If it was damaged, contact the retailer and do not proceed any further with the installation process.

General safety

- This appliance should not be operated by children younger than 8 years, people with reduced physical, sensory or mental capacities, or inexperienced people who are not familiar with the product, unless they are given close supervision or instructions on how to use it safely and are made aware by a responsible person of the dangers its use might entail.
- Children must not play with the appliance.
- It is the user's responsibility to clean and maintain the appliance. Children should never clean or maintain it unless they are given supervision.
- The appliance was designed for domestic use inside the home and is not intended for commercial or industrial use.
- The appliance must be used to wash domestic crockery in accordance with the instructions in this manual.
- The appliance must not be installed outdoors, even in covered areas. It is extremely dangerous to leave the machine exposed to rain and storms.
- Do not touch the appliance when barefoot.
- When unplugging the appliance always pull the plug from the mains socket. Do not pull on the cable.
- The water supply tap must be shut off and the plug should be removed from the electrical socket at the end of every cycle and before cleaning the appliance or carrying out any maintenance work.
- The maximum number of place settings is shown in the product sheet.
- If the appliance breaks down, do not under any circumstances touch the internal parts in an attempt to perform the repair work yourself.
- Do not lean or sit on the open door: this may cause the appliance to overturn.
- The door should not be left open as it may create a dangerous obstacle.
- Keep detergent and rinse aid out of reach of children.
- The packaging material should not be used as a toy.
- Knives and other utensils with sharp edges must be placed either with the points/blades facing downwards in the cutlery basket or horizontally on the tip-up compartments or in the tray/third basket, if available.
- Connect the appliance to the water mains using the new supply hose provided with the appliance. Do not re-use the old hose.
- Install the back side of a free-standing dishwasher against a wall.

Disposal

- To dispose of any packaging materials, follow local legislation so that the packagings may be reused.
- The European Directive 2012/19/EU relating to Waste Electrical and Electronic Equipment (WEEE) states that household appliances should not be disposed of using the normal solid urban waste cycle. Exhausted appliances should be collected separately in order to optimise the cost of reusing and recycling the materials inside the machine, while preventing potential damage to the atmosphere and public health. The crossed-out dustbin symbol shown on all products reminds the owners of their obligations regarding separated waste collection.
  For further information relating to the correct disposal of household

appliances, owners may contact the relevant public authority or the local appliance dealer.

Saving energy and respecting the environment

Saving water and energy

- Only begin a wash cycle when the dishwasher is full. While waiting for the dishwasher to be filled, prevent unpleasant odours with the Soak cycle *(if available, see Wash Cycles)*.
- Select a wash cycle that is suited to the type of crockery and to the soil level using the Table of Wash Cycles:
  - For dishes with a normal soil level, use the Eco wash cycle, which guarantees low energy and water consumption levels.
  - If the load is smaller than usual activate the Half Load option *(see Special wash cycles and options, if available).*
- If your electricity supply contract gives details of electricity-saving time bands, run the wash cycles when electricity prices are lower. The DELAYED START option can help you organise the wash cycles accordingly *(see Special wash cycles and options, if available).*

Product Data (product fiche)

Product Fiche	
Brand	**INDESIT**
Model	**DFP 27T94**
Rated capacity in standard place settings (1)	14
Energy efficiency class on a scale from A+++ (low consumption) to D (high consumption)	A++
Energy consumption per year in kWh (2)	265
Energy consumption of the standard cleaning cycle in kWh	0.93
Power consumption of the off-mode in W	0.5
Power consumption of the left-on mode in W	5.0
Water consumption per year in litres (3)	2520
Drying efficacy class on a scale from G (low efficacy) to A (high efficacy)	A
Programme time for standard cleaning cycle in minutes	190
The duration of the left-on mode in minutes	12
Noise in dB(A) Re 1pW	44
Built-in model	No
NOTES	
1) The information on the label and fiche relates to the standard cleaning cycle, this programme is suitable to clean normally soiled tableware and it is the most efficient programme in terms of combined energy and water consumption. The standard cleaning cycle corresponds to the Eco cycle.	
2) Based on 280 standard cleaning cycles using cold water fill and the consumption of the low power modes. Actual energy consumption depends on how the appliance is used.	
3) Based on 280 standard cleaning cycles. Actual water consumption depends on how the appliance is used.	

Installation

GB

⚠ If the appliance must be moved at any time, keep it in an upright position; if absolutely necessary, it may be tilted onto its back.

Connecting the water supply

⚠ Adaptation of the water supply for installation should only be performed by a qualified technician.

The water inlet and outlet hoses may be positioned towards the right or the left in order to achieve the best possible installation.
Make sure the dishwasher does not bend or squash the hoses.

Connecting the water inlet hose

- To a 3/4" gas cold or hot water connection point (max. 60°C).
- Run the water until it is perfectly clear.
- Screw the inlet hose tightly into position and turn off the tap.

⚠ If the inlet hose is not long enough, contact a specialist store or an authorised technician *(see Assistance)*.

⚠ The water pressure must be within the values indicated in the Technical Data table - otherwise the dishwasher may be function properly.

⚠ Make sure the hose is not bent or compressed.

Connecting the water outlet hose

Connect the outlet hose to a drain duct with a minimum diameter of 2 cm. (A)
The outlet hose connection must be at a height ranging from 40 to 80 cm from the floor or surface where the dishwasher rests.

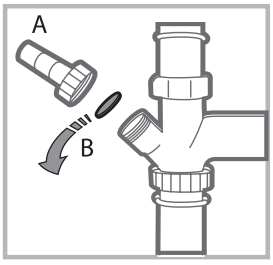

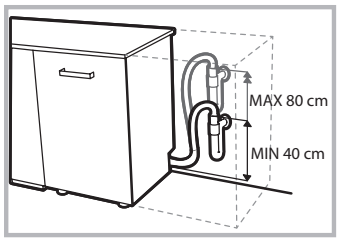

Before connecting the water outlet hose to the sink drain, remove the plastic plug (B).

Anti-flooding protection

To ensure floods do not occur, the dishwasher:
- is provided with a special system which blocks the water supply in the event of anomalies or leaks from inside the appliance.
Some models are also equipped with the supplementary safety device **New Acqua Stop***, which guarantees anti-flooding protection even in the event of a supply hose rupture.

WARNING: HAZARDOUS VOLTAGE!

Under no circumstances should the water inlet hose be cut as it contains live electrical parts.

Electrical connection

Before inserting the plug into the electrical socket, make sure that:
- The socket is **earthed** ⏚ and complies with current regulations;
- the socket can withstand the maximum load of the appliance as shown on the data plate located on the inside of the door
  (see chapter Description of the appliance);
- The power supply voltage falls within the values indicated on the data plate on the inside of the door.
- The socket is compatible with the plug of the appliance. If this is not the case, ask an authorised technician to replace the plug (*see Assistance*). Do not use extension cables or multiple sockets.

⚠ Once the appliance has been installed, the power supply cable and the electrical socket should be easily accessible.

⚠ The cable should not be bent or compressed.

⚠ If the power supply cable is damaged, have it replaced by the manufacturer or its authorised Technical Assistance Service in order to prevent all potential hazards. *(See Assistance)*

⚠ The Company shall not be held responsible for any incidents, if these regulations are not observed.

Positioning and levelling

1. Position the dishwasher on a level sturdy floor. If the floor is uneven, the front feet of the appliance may be adjusted until it reaches a horizontal position. If the appliance is levelled correctly, it will be more stable and much less likely to move or cause vibrations and noise while it is operating.

2. Before recessing the dishwasher, stick the adhesive transparent strip* under the wooden shelf in order to protect it from any condensation which may form.

3. Place the dishwasher so that its sides or back panel are in contact with the adjacent cabinets or the wall. This appliance can also be recessed under a single worktop* *(see the Assembly instruction sheet)*.

4*. To adjust the height of the rear foot, turn the red hexagonal bushing on the lower central part at the front of the dishwasher using a hexagonal spanner with an opening of 8 mm. Turn the spanner in a clockwise direction to increase the height and in an anticlockwise direction to decrease it. *(see Building-in instruction sheet attached to the documentation)*

* Only available in selected models.

Advice regarding the first wash cycle

After the installation, remove the stoppers from the racks and the retaining elastic elements from the upper rack *(if any).*

Water softener settings

Before starting the first wash cycle, set the hardness level of the water from the mains supply. *(see chapter Rinse aid and refined salt).*
First load the softener tank with water, then introduce about 1 kg of salt. It is perfectly normal for water to flow out.
As soon as this procedure is complete, run a wash cycle.
Only use salt that has been specifically designed for dishwashers.
After the salt has been poured into the machine, the LOW SALT indicator light* switches off.

⚠ If the salt container is not filled, the water softener and the heating element may be damaged as a result.

The machine has a buzzer/set of tones *(depending on the dishwasher model*) **to inform the user that a command has been implemented: power on, cycle end etc.**

The symbols/indicator lights/LEDs on the control panel/ display may vary in colour and may have a flashing or fixed light *(depending on the dishwasher model).*

The display* provides useful information concerning the type of wash cycle, drying/wash-cycle phase, remaining time, temperature etc.

Technical data	
Dimensions	width 60 cm height 85 cm depth 60 cm
Capacity	**14** standard place-settings
Water supply pressure	0,05 ÷ 1MPa (0.5 ÷ 10 bar) 7,25 psi – 145 psi
Power supply voltage	See appliance data plate
Total absorbed power	See appliance data plate
Fuse	See appliance data plate
CE 	This dishwasher conforms to the following European Community Directives: -2006/95/EC (Low Voltage) -2004/108/EC (Electromagnetic Compatibility) -2009/125/EC (Comm. Reg. 1016/2010) (Ecodesign) -97/17/EC (Labelling) -2012/19/CE Waste Electrical and Electronic Equipment (WEEE)

Electrical Connection

GB

Electrical Connection
If your appliance is supplied with a 13 amp. fused plug it can be plugged into a 13 amp socket for immediate use. Before using the appliance please read the instruction below.

⚠ **WARNING: THIS APPLIANCE MUST BE EARTHED. THE FOLLOWING OPERATIONS SHOULD BE CARRIED OUT BY A QUALIFIED ELECTRICIAN.**

Replacing the fuse:
When replacing a faulty fuse, a 13 amp ASTA approved fuse to BS 1362 should always be used, and the fuse cover re-fitted. If the fuse cover is lost, the plug must not be used until a replacement is obtained.

Replacemente fuse covers:
If a replacement fuse cover is fitted, it must be of the correct colours as indicated by the coloured marking or the colour that is embossed in words on the base of the plug. Replacements can be obtained directly from your nearest Service Depot.

Removing the plug:
Ifyour appliance has a non-rewireable moulded plug and you should wish to remove it to re-route the mains cable through partitions, units etc., please esure that either:
- the plug is replaced by a fused 13 amp re-wireable plug bearing the BSI mark of approval
- or:
- the mains cable is wired directly into a 13 amp cable outlet, controlled by a switch, (in compliance with BS 5733) which is accessible without moving the appliance.

Disposing of the plug:
Ensure that before disposing of the plug itself, you make the pins unusable so that it cannot be accidentally inserted into a socket.

Instruction for connecting cable to an altenative plug:
Important: the wires in the mains lead are coloured in accordance with the following code:

Green & Yellow	**- Earth**
Blue	**- Neutral**
Brown	**- Live**

⚠ **CAUTION:**
- Once the appliance has been installed, the electrical plug and socket should remain accessible.

⚠ - The Company shall not be held responsible for any incidents that occur if these regulations are not observed.

As the colours of the wires in the mains lead may not correspond with the coloured markings identifying the terminal in your plug, proceed as follows:
connect Green & Yellow wire to terminal market **"E"** or coloured Green or Green & Yellow.
Connect Brown wire to terminal marked **"L"** or coloured Red.
Connect Blue wire to terminal marked **"N"** or coloured Black.

If a 13 amp plug (BS 1363) is used it must be fitted with a 13 amp fuse. A15 amp plug must be protected by a 15 amp fuse, either in the plug or adaptor or at the distribution board. If you are in any doubt about the electrical supply to your machine, consult a qualified electrician before use.

How to connect an alternative plug:
The wires in this mains lead are coloured in accordance with the following code:

BLUE	**"NEUTRAL" ("N")**
BROWN	**"LIVE" ("L")**
GREEN AND YELLOW	**"EARTH" ("E")** or ⏚

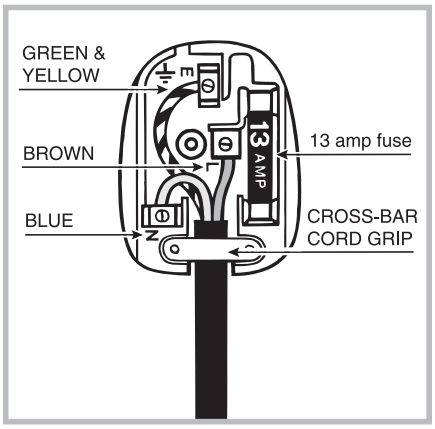

Disposing of the appliance:
When disposing of the appliance please remove the plug by cutting the mains cable as close as possible to the plug body and dispose of it as described above.

Description of the appliance

INDESIT

GB

Overall view

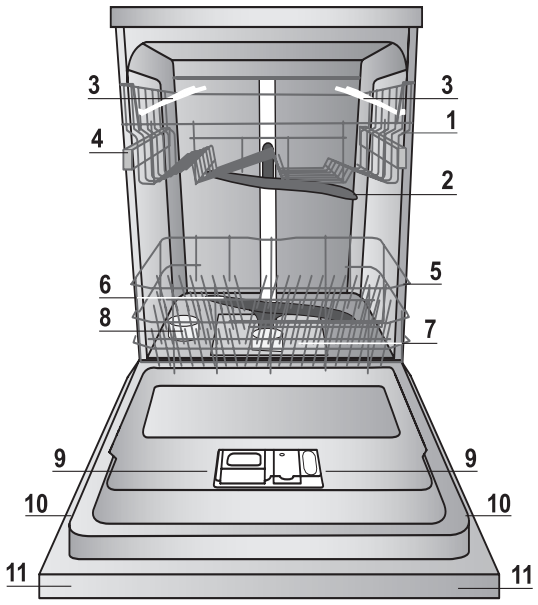

1. Upper rack
2. Upper spray arm
3. Tip-up dispensers
4. Rack height adjuster
5. Lower rack
6. Lower spray arm
7. Washing filter
8. Salt dispenser
9. Detergent dispenser and rinse-aid dispenser
10. Data plate
11. Control panel***

Control panel

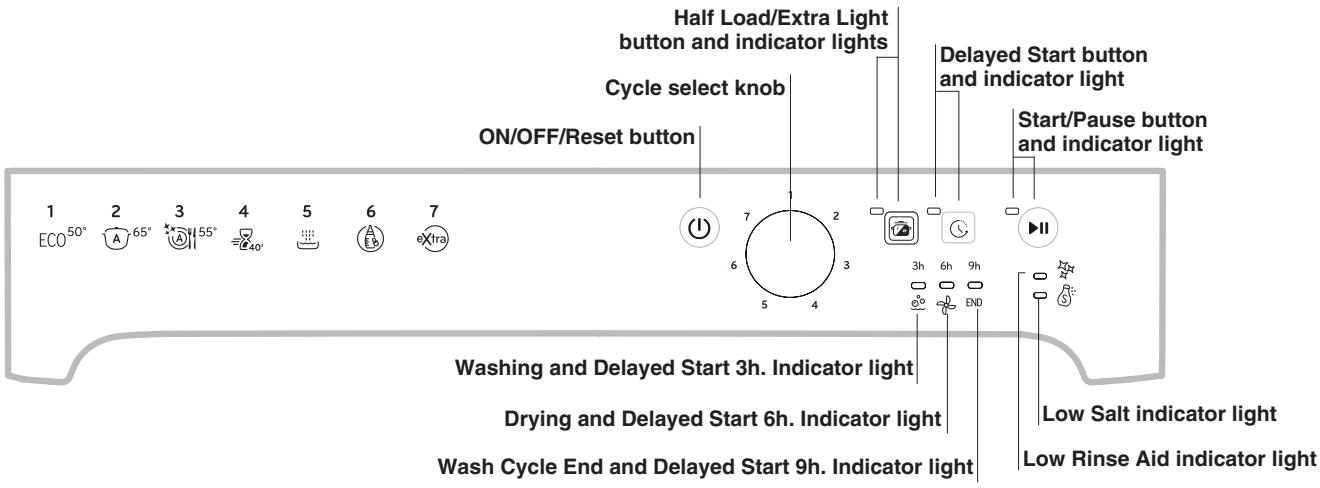

***Only in completely built-in models.

* Only available in selected models.

The number and type of wash cycles and options may vary depending on the dishwasher model.

Refined Salt and Rinse Aid

GB

⚠ **Only use products which have been specifically designed for dishwashers. Do not use table salt or industrial salt. Follow the instructions given on the packaging.**

⚠ **If you are using a multi-function product, we recommend that you add salt in any case, especially if the water is hard or very hard.** *(Follow the instructions given on the packaging.)*

⚠ **If you do not add salt or rinse aid, the LOW SALT* and LOW RINSE AID* indicator lights will remain lit.**

Measuring out the refined salt

The use of salt prevents the formation of LIMESCALE on the dishes and on the machine's functional components.

- It is important that the salt dispenser be never empty.
- It is important to set the water hardness.

The salt dispenser is located in the lower part of the dishwasher *(see Description)* and should be filled:

- When the LOW RINSE AID indicator light in the control panel is lit *;
- When the green float* on the cap of the salt dispenser is no longer visible.
- See autonomy in the water hardness table.



1. Remove the lower rack and unscrew the container cap (anticlockwise).
2. Only the first time you do this: fill the water dispenser up to the edge.
3. Position the funnel *(see figure)* and fill the salt container right up to its edge (approximately 1 kg); it is not unusual for a little water to leak out.
4. Remove the funnel and wipe any salt residue away from the opening; rinse the cap under running water and then screw it on.

It is advisable to perform this procedure every time you add salt to the container.

Make sure the cap is screwed on tightly, so that no detergent can get into the container during the wash cycle (this could damage the water softener beyond repair).

⚠ Whenever you need to add salt, we recommend carrying out the procedure before the washing cycle is started.

Setting the water hardness

For perfect water softener operation, it is essential that the adjustment be based on the water hardness in your house. Ask your local water supplier for this information. The factory setting is for medium water hardness.

- Switch the dishwasher on using the On/Off button. ⏻
- Switch it off using the On/Off button ⏻
- Hold down the START/PAUSE button ⏯ for 5 seconds until you hear a beep.
- Switch it on using the On/Off button ⏻
- Access the adjustment menu - the salt indicator light is lit.
- Select the desired level using the SELECT WASH CYCLE knob *(see hardness table).*
- Switch it off using the On/Off button ⏻
- Setting is complete!

Water Hardness Table				Average autonomy salt dispenser with 1 wash cycle per day
level	**°dH**	**°fH**	**mmol/l**	**months**
1	0 - 6	0 - 10	0 - 1	7 months
2	6 - 11	11 - 20	1.1 - 2	5 months
3	12 - 17	21 - 30	2.1 - 3	3 months
4	17 - 34	31 - 60	3.1 - 6	2 months
5	34 - 50	61 - 90	6.1 - 9	2/3 weeks
For values between 0°f and 10°f, we do not recommend the use of salt. A setting of 5 may increase cycle duration.				

(°dH = hardness measured in German degrees - °f = hardness measured in French degrees – mmol/l = millimoles per litre)

Measuring out the rinse aid

Rinse aid makes dish DRYING easier. The rinse aid dispenser should be filled:

- When the LOW RINSE AID indicator light on the panel/display is lit *;
- When the dark optical indicator* on the dispenser door **"D"** becomes transparent.

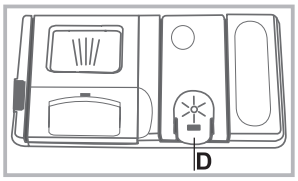

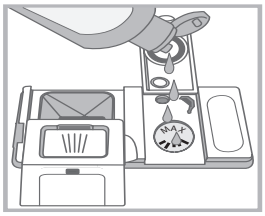

1. Open the dispenser **"D"** by pressing and pulling up the tab on the lid;
2. Carefully introduce the rinse aid as far as the maximum reference notch in the filling space - avoid spilling it. If this happens, clean the spill immediately with a dry cloth.
3. Press the lid down until you hear a click to close it.

NEVER pour the rinse aid directly into the tub.

Adjusting the amount of rinse aid

If you are not completely satisfied with the drying results, you may want to adjust the quantity of rinse aid used.

- Switch the dishwasher on using the On/Off button. ⏻
- Switch it off using the On/Off button ⏻
- Press the START/PAUSE button ⏯ three times - a beep will be heard.
- Switch it on using the On/Off button ⏻
- Access the adjustment menu - the rinse-aid indicator light is lit.
- Select the desired level using the SELECT WASH CYCLE knob.
- Switch it off using the On/Off button ⏻
- Setting is complete!

If the rinse aid level is set to ZERO, the rinse aid will not be supplied and the low rinse aid indicator light will not be lit if you run out of it.

A maximum of 4 levels can be set according to the dishwasher model. The factory setting is for a medium level.

- If you see bluish streaks on the dishes, set a low number (1-2).
- If there are drops of water or limescale marks on the dishes, set a high number (3-4).

* Only available in selected models.

Loading the racks

Tips

Before loading the racks, remove all food residues from the crockery and empty liquids from glasses and containers. **No preventive rinsing is needed under running water.**
Arrange the crockery so that it is held in place firmly and does not tip over; and arrange the containers with the openings facing downwards and the concave/convex parts placed obliquely, thus allowing the water to reach every surface and flow freely.
Make sure that the lids, handles, trays and frying pans do not prevent the spray arms from rotating. Place any small items in the cutlery basket.
Since plastic dishes and non-stick frying pans usually retain more water drops, their drying will be not so good as that of ceramic or stainless-steel dishes.
Lightweight items such as plastic containers should be placed in the upper rack and arranged so that they cannot move.
After loading the appliance, make sure that the spray arms can rotate freely.

Lower rack

The lower rack can hold pans, lids, dishes, salad bowls, cutlery etc. Large plates and lids should ideally be placed at the sides.

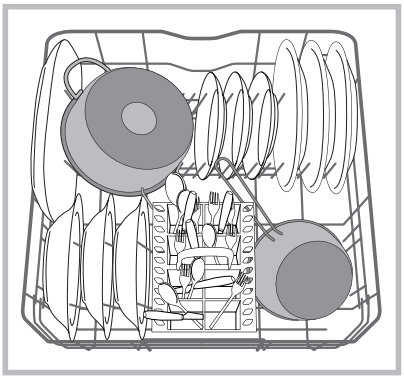

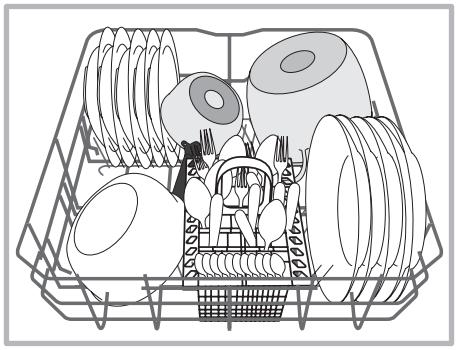

Very soiled dishes and pans should be placed in the lower rack because in this sector the water sprays are stronger and allow a higher washing performance.

*Only available in selected models with different numbers and positions.

Several dishwasher models are fitted with tip-up sectors*. They can be used in a vertical position when arranging dishes or in a horizontal position (lower) to load pans and salad bowls easily.

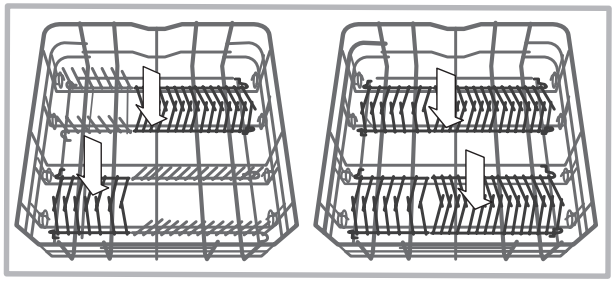

Cutlery basket

The modular basket is equipped with top grilles for improved cutlery arrangement. The cutlery basket should be positioned **only** at the front of the lower rack

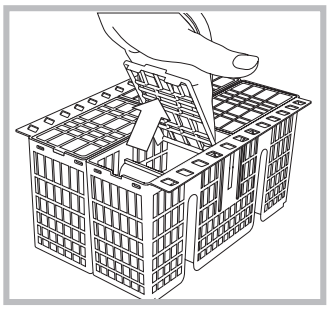

⚠ Knives and other utensils with sharp edges must be placed in the cutlery basket with the points facing downwards or they must be positioned horizontally in the tip-up compartments on the upper rack

Upper rack

Load this rack with delicate and lightweight crockery such as glasses, cups, saucers and shallow salad bowls.

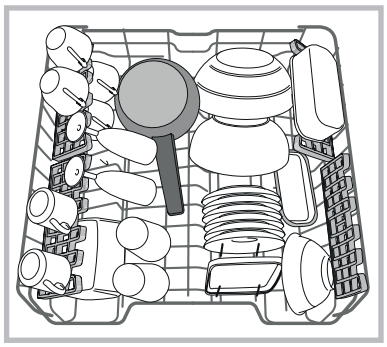

Several dishwasher models are fitted with tip-up sectors*. They can be used in a vertical position when arranging tea/dessert saucers or in a lower position to load bowls and food containers.

Tip-up compartments with adjustable position

The side tip-up compartments can be positioned at three different heights to optimize the arrangement of crockery inside the rack.

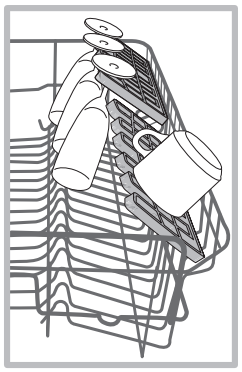

Wine glasses can be placed safely in the tip-up compartments by inserting the stem of each glass into the corresponding slots.

For optimum drying results incline the tip-up compartments more. To change the inclination, pull up the tip-up compartment, slide it slightly and position it as you wish.

Cutlery tray*

Some dishwasher models are fitted with a sliding tray which can be used to hold serving utensils or small cups. For optimum washing performance avoid positioning bulky crockery directly below the tray. The cutlery tray can be removed *(see Figure).*

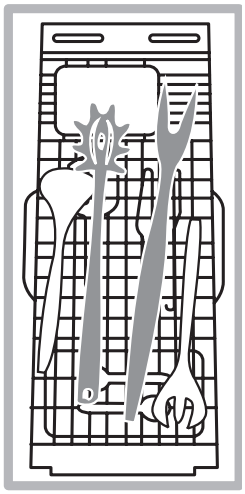

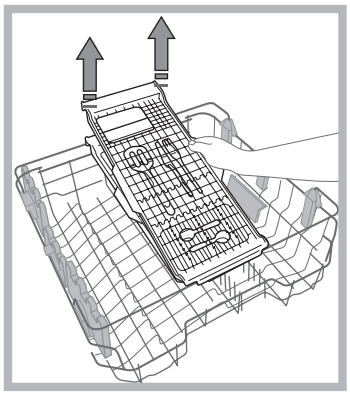

The upper rack can be adjusted for height based on requirements: high position to place bulky crockery in the lower rack and low position to make the most of the tip-up compartments/sectors by creating more space upwards.

Adjusting the height of the upper rack

In order to make it easier to arrange the crockery, the upper rack may be moved to a higher or lower position.

The height of the upper rack should be adjusted WHEN THE RACK IS EMPTY.

NEVER raise or lower the rack on one side only.

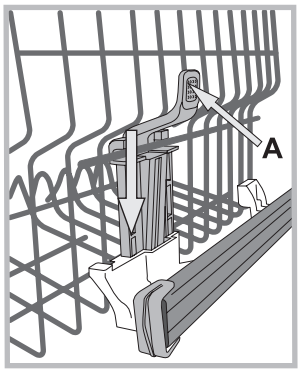

If the rack is equipped with a **Lift-Up device*** *(see figure)*, lift it up by holding its sides. To restore the lower position, press the levers (**A**) at the sides of the rack and follow the rack down.

Unsuitable crockery

- Wooden crockery and cutlery.
- Delicate decorated glasses, artistic handicraft and antique crockery. Their decorations are not resistant.
- Parts in synthetic material which do not withstand high temperatures.
- Copper and tin crockery.
- Crockery soiled with ash, wax, lubricating grease or ink.

The colours of glass decorations and aluminium/silver pieces can change and fade during the washing process. Some types of glass (e.g. crystal objects) can become opaque after a number of wash cycles too.

Damage to glass and crockery

Caused by:

- Type of glass and glass production process.
- Chemical composition of detergent.
- Water temperature of rinse cycle.

Tips:

- Only use glasses and porcelain guaranteed by the manufacturer as dishwasher safe.
- Use a delicate detergent suitable for crockery.
- Collect glasses and cutlery from the dishwasher as soon as the wash cycle is over.

* Only available in selected models.

Detergent and dishwasher use

INDESIT

GB

Measuring out the detergent

A good wash result also depends on the correct amount of detergent being used. Exceeding the stated amount does not result in a more effective wash and increases environmental pollution.

Based on how soiled the items are, the amount can be adjusted to individual cases using powder or liquid detergent.
In the case of normally soiled items, use approximately either 35 gr (powder detergent) or 35 ml (liquid detergent). If tablets are used, one tablet will be enough.

If the crockery is only lightly soiled or if it has been rinsed with water before being placed in the dishwasher, reduce the amount of detergent used accordingly.

For good washing results also follow the instructions shown on the detergent box.

For further questions please ask the detergent producers.

To open the detergent dispenser use the opening device "A".

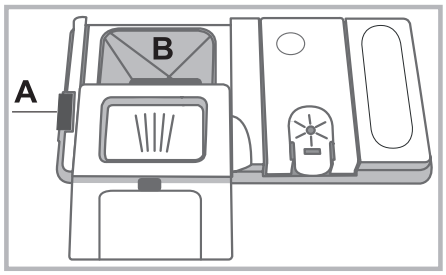

Introduce the detergent into the dry dispenser "B" only. Place the amount of detergent for pre-washing directly inside the tub.

1. When measuring out the detergent refer to the Table of wash cycles to add the proper quantity. Compartment **B** comprises a level showing the maximum quantity of liquid or powder detergent that can be added to each cycle.

2. Remove detergent residues from the edges of the dispenser and close the cover until it clicks.

3. Close the lid of the detergent dispenser by pulling it up until the closing device is secured in place.
The detergent dispenser automatically opens up at the right time according to the wash cycle.

If all-in-one detergents are used, we recommend using the TABS option, because it adjusts the cycle so that the best washing and drying results are always achieved.

⚠ **Only use detergent which has been specifically designed for dishwashers.**

DO NOT USE washing up liquid.

Using excessive detergent may result in foam residues remaining in the machine after the cycle has ended.

To achieve the best washing and drying results, the combined use of detergent, rinse aid liquid and refined salt is required.

We recommend using detergents that do not contain phosphates or chlorine, as these products are harmful to the environment.

Starting the dishwasher

1. Turn the water tap on.
2. Switch on the appliance by pressing the ON/OFF button.
3. Open the door and pour in a suitable amount of detergent *(see Measuring out the detergent).*
4. Load the racks *(see Loading the racks)* and shut the door.
5. Select the wash cycle by turning the SELECT WASH CYCLE knob: align the notch on the knob with the number or symbol representing the desired wash cycle. The START/PAUSE indicator light will go on.
6. Select the wash options* *(see Options and Special Wash Cycles).*
7. Start the cycle by pressing the START button; the indicator light will stop flashing and stay lit (fixed light). The indicator light corresponding to the wash phase will go on, signalling that the wash cycle has begun.
8. At the end of the wash cycle the **END** indicator light will go on (fixed light). Switch off the appliance by pressing the ON/OFF button.
9. Wait a few minutes before removing the crockery to avoid getting burnt. Unload the racks, beginning with the lower level.

⚠ **The machine will switch off automatically during long periods of inactivity in order to minimise electricity consumption.**

⚠ **AUTO WASH CYCLES**: some models of dishwasher are equipped with a special sensor which can be used to assess the level of soiling and automatically select the most efficient and economic wash cycle accordingly. The duration of the auto wash cycles may vary due to the operation of the sensor.

Changing a wash cycle in progress

If a mistake was made in the wash-cycle selection process, it is possible to change the cycle provided that it has only just begun: once the wash cycle has started, in order to change the wash cycle switch off the machine by pressing and holding the ON/OFF/Reset button. Switch it back on using the same button and select the desired wash cycle and options.

Adding extra crockery

Press the Start/Pause button and open the door, taking care to avoid the escaping steam, and place the crockery inside the dishwasher. Press the Start/Pause button: The cycle will start again after a long beep has been emitted.

⚠ If the delayed start has been set, at the end of the countdown the wash cycle will not start. It will stay in Pause mode.

⚠ Press the Start/Pause button to pause the machine; the wash cycle is stopped.
At this stage the wash cycle cannot be changed.

Accidental interruptions

If the door is opened during the wash cycle or there is a power cut, the cycle stops. It starts again from the point at which it was interrupted once the door has been shut or the electricity supply restored.

* Only available in selected models.

Wash cycles

GB

Wash-cycle data is measured under laboratory conditions according to European Standard EN 50242.
Based on the different conditions of use, the wash-cycle duration and data can change.

⚠ **The number and type of wash cycles and options may vary depending on the dishwasher model.**

Wash Cycle	Drying	Options	Wash Cycle Duration H:Min.	Water Consumption (l/cycle)	Energy Consumption (kWh/cycle)
1. Eco ECO 50°	Yes	Delayed start – Half Load	03:10	9,0	0,93
2. Auto Intensive A 65°	Yes	Delayed start – Half Load	02:00 - 03:10	14,0 - 15,5	1,50 - 1,80
3. Auto Normal A 55°	Yes	Delayed start – Half Load	01:30 - 02:30	14,5 - 16,0	1,15 - 1,30
4. Rapid 40’ 40’	No	Delayed start	00:40’	9,0	0,9
5. Prewash	No	Delayed start – Half Load	00:12’	4,5	0,01
6. Baby Care	Yes	Delayed start	01:40’	10,0	1,3
7. Extra eXtra	No	Delayed start - Extra light (Half-Load)	01:00’	11,0	n.a.

Instructions on wash-cycle selection and detergent dosage

1. The ECO wash cycle is the standard cycle to which the energy label data refers. It can be used to wash crockery with a normal soil level and is the most efficient cycle in terms of energy and water consumption for this type of crockery.
29 gr/ml + 6 gr/ml** – 1 Tab *(**Quantity of pre-washing detergent)*

2. Heavily soiled dishes and pans (not to be used for delicate items). 35 gr/ml – 1 Tab

3. Normally soiled pans and dishes. 29 gr/ml + 6 gr/ml** – 1 Tab

4. Fast cycle to be used for slightly dirty dishes (ideal for 2 place settings) 25 gr/ml – 1 Tab

5. Pre-wash while awaiting completion of the load with the dishes from the next meal. No detergent.

6. Program combined with the Baby Care specially-designed basket ensures the best cleaning results and sanitization of baby accessories (soother, pacifiers, teats) while washing also normally or heavily soiled crockery. 30 g/ml – 1 Tab

7. Large crockery. *(Do not use on delicate items).* 35 gr/ml – 1 Tab

Standby consumption: Left-on mode consumption: 5,0 W - Off mode consumption: 0.5 W

n.a. = non applicable

Special wash cycles and Options

INDESIT

GB

Notes:
Optimum performance levels when using the "Rapid 40'" cycle can be achieved by respecting the specified number of place settings.

To reduce consumption even further, only run the dishwasher when it is full.

Note for Test Laboratories: for information on comparative EN testing conditions, please send an email to the following address: assistenza_en_lvs@indesitcompany.com

Wash cycle EXTRA

EXTRA makes it possible to carry out a heavy-duty wash cycle of large crockery up to a max height of 53cm: baking pans, oven grids, dripping pans, hob grids, large saucepans, serving dishes, pizza dishes, stainless-steel hood filters.
Remove the upper rack to load bulky crockery.

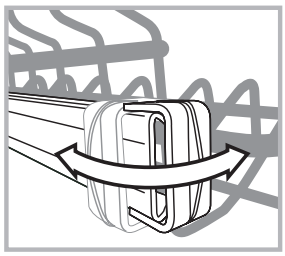

Release the two locks (right and left) and pull out the rack.
When the upper rack is fitted, the locks must be always closed.

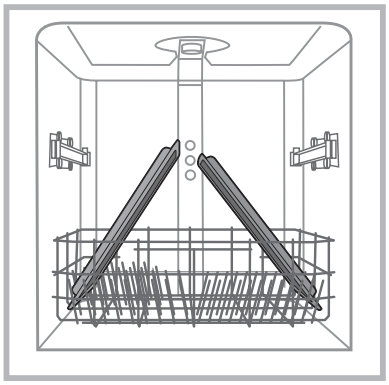

In order for the water to reach the crockery everywhere, arrange it as shown in the Figure.
The cycle can also be used on large delicate crockery using the option Extra Light *(see Wash Options).*
Do not start the dishwasher without the upper rack using wash cycles other than EXTRA.

To carry out the wash cycle Extra and Extra with the Light* option pour the detergent directly into the tub and not into the dispenser.

Wash options

The OPTIONS may only be set, changed or reset after the wash cycle has been selected and before the Start/Pause button has been pressed.

Only the options which are compatible with the type of wash cycle set may be selected. If an option is not compatible with the selected wash cycle *(see Table of wash cycles)*, the corresponding symbol/LED flashes rapidly 3 times.

If an option is selected which is not compatible with another previously-selected option, it will flash 3 times and go off, while the most recently selected option will remain active.
To deselect an option which has been set by mistake, press the corresponding button again.



Half load/Extra light options

The button has two functions: HALF LOAD and EXTRA LIGHT.
Select the wash cycle and press the HALF LOAD/EXTRA LIGHT button; the indicator light will go on.
Press the HALF LOAD/EXTRA LIGHT button again to deselect this option.

Half Load

If there are not many dishes to be washed, a half load cycle may be used in order to save water, electricity and detergent.
The amount of detergent can be halved.

Extra Light

Compatible with the wash cycle EXTRA only.
This option makes EXTRA suitable to large delicate crockery and items. This option includes no drying phase.

⚠ Make sure the crockery and items are dishwasher-safe.



Delayed start option

It is possible to delay the start time of the wash cycle by **3, 6 or 9** hours:
1:After selecting the desired wash cycle and any other options, press the DELAYED START button. the indicator light will go on.
2: Select the desired delay time by pressing the Delayed Start button repeatedly. The wash phase (3 hours), drying phase (6 hours) and end (9 hours) indicator lights will go on in succession.
If the Delayed Start button is pressed again, the option is deselected and the indicator light goes off.
3. After the selection process, the countdown will begin if the Start/Pause button is pressed. The selected delay-period indicator light flashes and the Start/Pause button stops flashing (fixed light).
3. Once this time has elapsed, the DELAYED START indicator light goes off and the wash cycle begins.

The Delayed Start function cannot be set once a wash cycle has started.

* Only available in selected models.

Care and maintenance

GB

Shutting off the water and electricity supplies

- Turn off the water tap after every wash cycle to avoid leaks.
- Always unplug the appliance when cleaning it and when performing maintenance work.

Cleaning the dishwasher

- The external surfaces of the machine and the control panel can be cleaned using a non-abrasive cloth which has been dampened with water. Do not use solvents or abrasive products.
- Any marks on the inside of the appliance may be removed using a cloth dampened with water and a little vinegar.

Preventing unpleasant odours

- Always keep the door of the appliance ajar in order to avoid moisture from forming and being trapped inside the machine.
- Clean the seals around the door and detergent dispensers regularly using a damp sponge. This will avoid food becoming trapped in the seals, which is the main cause behind the formation of unpleasant odours.

Cleaning the spray arms

Food residue may become encrusted onto the spray arms and block the holes used to spray the water. It is therefore recommended that you check the arms from time to time and clean them with a small non-metallic brush.
The two spray arms may both be removed.

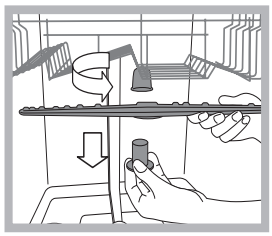

To remove the upper spray arm, turn the plastic locking ring in an anti-clockwise direction. The upper spray arm should be replaced so that the side with the greater number of holes is facing upwards.

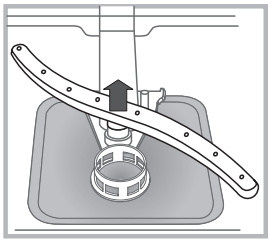

The lower spray arm can be removed by pressing on the side tabs and pulling it upwards.

Cleaning the water inlet hose

If the water hoses are new or have not been used for an extended period of time, let the water run to make sure it is clear and free of impurities before performing the necessary connections. If this precaution is not taken, the water inlet could become blocked and damage the dishwasher.

⚠ Clean the water inlet filter at the tap outlet regularly.
- Turn off the water tap.
- Unscrew the end of the water inlet hose, remove the filter and clean it carefully under running water.
- Re-place the filter and screw the water hose back into position.

Cleaning the filters

The filter assembly consists of three filters which remove food residues from the washing water and then recirculate the water. They must be cleaned if you wish to achieve the best results in every wash.

⚠ Clean the filters regularly.

⚠ The dishwasher must not be used without filters or if the filter is loose.

• After several washes, check the filter assembly and if necessary clean it thoroughly under running water, using a non-metallic brush and following the instructions below:
1. Turn the cylindrical filter **C** in an anti-clockwise direction and pull it out *(fig. 1).*
2. Remove the cup filter **B** by exerting a slight pressure on the side flaps *(fig. 2);*
3. Slide out the stainless-steel plate filter **A**. *(fig. 3).*
4. Inspect the trap and remove any food residues. **NEVER REMOVE** the wash-cycle pump protection *(black detail) (fig.4).*

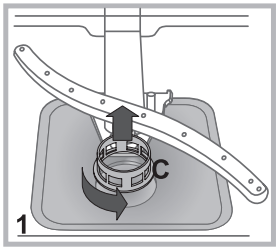

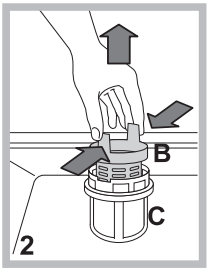

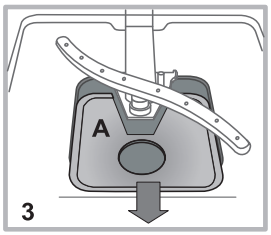

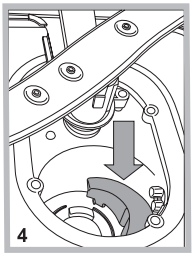

After cleaning the filters, re-place the filter assembly and fix it in position correctly; this is essential for maintaining the efficient operation of the dishwasher.

Leaving the machine unused for extended periods

- Disconnect the appliance from the electricity supply and shut off the water tap.
- Leave the door of the appliance ajar.
- When you return, run a wash cycle when the dishwasher is empty.

* Only available in selected models.

Troubleshooting

INDESIT

GB

Whenever the appliance fails to work, check for a solution from the following list before calling for Assistance.

Problem:	Possible causes / Solutions:
The dishwasher does not start or cannot be controlled.	• The water supply tap is not turned on. • Switch off the appliance by pressing the ON/OFF button, switch it back on after approximately one minute and reset the wash cycle. • The appliance has not been plugged in properly or another electricity socket should be used. • The dishwasher door has not been closed properly.
The door won't close.	• Make sure that the racks were inserted all the way. • The lock was released. Strongly push the door until a "clacking" noise is heard.
No water drain out of the dishwasher.	• The wash cycle has not finished yet. • The water drain hose is bent *(see Installation).* • The drain duct is clogged up. • The filter is clogged up with food residues. • Check the height of the drain hose.
The dishwasher makes excessive noise.	• The dishes are rattling against each other or against the sprayer arms. Place the dishes properly and make sure the spray arms can rotate freely. • Too much foam: the detergent has not been measured out correctly or it is not suitable for use in dishwashers. *(See Detergent and dishwasher use.)* Do not prewash the dishes by hand.
The dishes and glasses are covered in a white film or limescale deposits.	• No refined salt. • Water hardness adjustment is not suitable: increase the relevant values. *(See Refined Salt and Rinse Aid.)* • The salt and rinse-aid dispenser cap has not been closed properly. • The rinse aid has been used up or the dosage is too low.
The dishes and glasses are streaked or have a bluish tinge.	• The rinse aid dosage is too high.
The crockery has not been dried properly.	• A wash cycle without a drying programme has been selected. • The rinse aid has been used up. *(See Refined Salt and Rinse Aid.)* • The rinse aid dispenser setting is not suitable. • The crockery is made from non-stick material or plastic; the presence of water drops is normal.
The dishes are not clean.	• The crockery has not been arranged properly. • The spray arms cannot rotate freely, being hindered by the dishes. • The wash cycle is too gentle *(see Wash Cycles).* • Too much foam: the detergent has not been measured out correctly or it is not suitable for use in dishwashers. *(See Detergent and dishwasher use.)* • The lid on the rinse aid compartment has not been closed correctly. • The filter is dirty or clogged up *(see Care and maintenance.)* • The refined salt level is low *(See Refined Salt and Rinse Aid.)* • Make sure that the height of the dishes is compatible with the rack adjustment. • The holes in the spray arms are clogged up. *(See Care and maintenance.)*
The dishwasher won't load any water. It is blocked with flashing lights.	• There is no water in the mains supply or the tap is shut off. • The water inlet hose is bent *(see Installation).* • The filters are clogged up: they need cleaning. *(See Care and maintenance.)* • The drain duct is clogged up: it needs cleaning. • After checking and cleaning, switch the dishwasher on and off and start a new wash cycle. • If the problem persists, turn off the water tap, remove the plug and call the Service Centre.

* Only available in selected models.

Product Guarantee and Repair Information

195154742.00 - NC
02/2017 jk - Xerox Fabriano

GB

Guarantee

12 Months Parts and Labour Guarantee

Your appliance has the benefit of our manufacturer's guarantee, which covers the cost of breakdown repairs for twelve months from the date of purchase.
This gives you the reassurance that if, within that time, your appliance is proven to be defective because of either workmanship or materials, we will, at our discretion, either repair or replace the appliance at no cost to you:
This guarantee is subject to the following conditions:
- The appliance has been installed and operated correctly and in accordance with our operating and maintenance instructions.
- The appliance is used only on the electricity or gas supply printed on the rating plate.
- The appliance has been used for normal domestic purposes only.
- The appliance has not been altered, serviced, maintained, dismantled, or otherwise interfered with by any person not authorised by us.
- Any repair work must be undertaken by us or our appointed agent.
- Any parts removed during repair work or any appliance that is replaced become our property.
- The appliance is used in the United Kingdom or Republic of Ireland.

The guarantee does not cover:
- Damage resulting from transportation, improper use, neglect or interference or as a result of improper installation.
- Replacement of any consumable item or accessory. These include but are not limited to: plugs, cables, batteries, light bulbs, fluorescent tubes and starters, covers and filters.
- Replacement of any removable parts made of glass or plastic.

THIS GUARANTEE WILL NOT APPLY IF THE APPLIANCE HAS BEEN USED IN COMMERCIAL OR NON-DOMESTIC PREMISES.

Recycling and Disposal Information

As part of Indesit's continued commitment to helping the environment, Indesit reserves the right to use quality, recycled components to keep down customer costs and minimise material wastage.
Please dispose of packaging and old appliances carefully. To minimise the risk of injury to children, remove the door, plug, and cut the mains cable off flush with the appliance. Dispose of these parts separately to ensure that the appliance can no longer be plugged into mains socket, and the door cannot be locked shut.

Repairs and After Sales

For product help and advice, repairs, spare parts or accessories, we're here to help.
For local repair engineers - **03448 111 606**
ROI - **0818 313 413**
UK standard local rate applies
ROI local Irish rate applies
For Parts and Accessories visit:
parts.indesit.co.uk/shop
Please remember to register your appliance at **www.indesitservice.co.uk** to activate your 10 year parts guarantee.
How to find your model and serial number:

