Washing Machine

User Manual

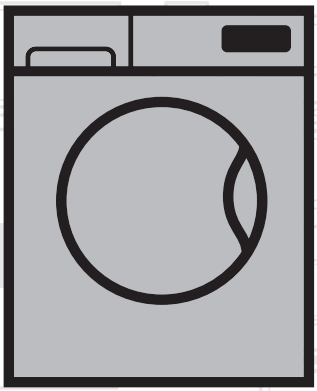

WIR76540F1

EN

Document Number= 2820526050_EN/ 23-10-17.(10:17)

Please read this user manual first!

Dear Customer,

Thank you for prefering a Beko product. We hope that you get the best results from your product which has been manufactured with high quality and state-of-the-art technology. Therefore, please read this entire user manual and all other accompanying documents carefully before using the product and keep it as a reference for future use. If you handover the product to someone else, give the user manual as well. Follow all warnings and information in the user manual.

Remember that this user manual is also applicable for several other models. Differences between models will be identified in the manual.

Explanation of symbols

Throughout this user manual the following symbols are used:

	Important information or useful hints about usage.
	Warning for hazardous situations with regard to life and property.
	Warning for electric shock.
	Recyclable materials.

Do not dispose of the packaging materials together with the domestic or other wastes. Take them to the packaging material collection points designated by the local authorities.



This product was manufactured using the latest technology in environmentally friendly conditions.

TABLE OF CONTENTS

1 General safety instructions 5

1.1 Life and property safety ---- 5
1.2 Children's safety ---- 6
1.3 Electrical safety ---- 6
1.4 Hot surface safety ---- 7

2 Important instructions for environment 8

2.1 Compliance with WEEE Directive ---- 8
2.2 Package information ---- 8

3 Intended use 8

4 Your washing machine 9

4.1 Overview ---- 9
4.2 Package Contents ---- 10
4.3 Technical specifications ---- 11
4.4 Installation ---- 12
- 4.4.1 Appropriate installation location ---- 12
- 4.4.2 Removing packaging reinforcement ---- 12
- 4.4.3 Removing the transportation locks ---- 13
- 4.4.4 Connecting water supply ---- 13
- 4.4.5 Connecting the drain hose to the drain ---- 14
- 4.4.6 Adjusting the feet ---- 15
- 4.4.7 Electrical connection ---- 16
- 4.4.8 Initial use ---- 18

4.5 Preparation ---- 19
- 4.5.1 Sorting the laundry ---- 19
- 4.5.2 Preparing laundry for washing ---- 20
- 4.5.3 Things to be done for energy saving ---- 20
- 4.5.4 Loading the laundry ---- 21
- 4.5.5 Correct load capacity ---- 21
- 4.5.6 Using detergent and softener ---- 21
- 4.5.7 Tips for efficient washing ---- 24

4.6 Operating the product ---- 25
- 4.6.1 Control panel ---- 25
- 4.6.2 Preparing the machine ---- 25
- 4.6.3 Programme selection and tips for efficient washing ---- 25
- 4.6.4 Programme and consumption table ---- 26
- 4.6.5 Main programmes ---- 27
- 4.6.6 Additional programmes ---- 27
- 4.6.7 Special programmes ---- 29
- 4.6.8 Temperature selection ---- 30
- 4.6.9 Spin speed selection ---- 30
- 4.6.10 Auxiliary function selection ---- 31

4.6.10.1 Auxiliary functions ---- 31
4.6.10.2 Functions/Programmes Selected by Pressing the Function Buttons for 3 Seconds ---- 32
4.6.11 Delayed Start ---- 33
4.6.12 Starting the programme ---- 33
4.6.13 Progress of programme ---- 34
4.6.14 Loading door lock ---- 34
4.6.15 Changing the selections after programme has started ---- 34
4.6.16 Cancelling the programme ---- 35
4.6.17 End of programme ---- 35
4.6.18 Your machine features "Standby Mode". ---- 35
4.7 Maintenance and cleaning ---- 36
4.7.1 Cleaning the detergent drawer ---- 36
4.7.2 Cleaning the loading door and the drum ---- 36
4.7.3 Cleaning the body and control panel ---- 37
4.7.4 Cleaning the water intake filters ---- 37
4.7.5 Draining remaining water and cleaning the pump filter ---- 38

5 Troubleshooting **39**

5 BUILT-IN INSTALLATION **44**

1 General safety instructions

This section includes security instructions which may help prevent the injuries and material damage risks. All kinds of warranties shall be invalid if these instructions are not observed.

1.1 Life and property safety

- Never place the product on a carpet-covered floor. Electrical parts will get overheated since air cannot circulate from under the device. This will cause problems with your product.
- Unplug the product if it is not in use.
- Always have the repairing procedures carried out by the Authorised Service Agent. Manufacturer shall not be held liable for damages that may arise from procedures carried out by unauthorised persons.
- The water supply and draining hoses must be securely fastened and remain undamaged. Otherwise, water leak may occur.
- While there is still water inside the product, never open the loading door or remove the filter. Otherwise, risk of flooding and injury from hot water will occur.
- Do not force open the locked loading door. Door can be opened a few minutes after the washing cycle ends. In case of forcing the loading door to open, the door and the lock mechanism may get damaged.
- Use detergents, softeners and supplements suitable for automatic washing machines only.
- Follow the instructions on the label of textiles and the detergent package.

1.2 Children's safety

- This product can be used by the children who are at the age of 8 and over and the people whose physical, sensory or mental skills are not fully developed or who do not have necessary required experience and knowledge as long as they are supervised or trained about the safe use of the product and its risks. Children should not play with the device. Cleaning and maintenance works should not be performed by children unless they are supervised by someone. Children of less than 3 years should be kept away unless continuously supervised.
- Packaging materials may be dangerous for the children. Keep packaging materials in a safe place away from reach of the children.
- Electrical products are dangerous for the children. Keep the children away from the product when it is in use. Do not allow them to play with the product. Use child lock to prevent children from intervening with the product.
- Do not forget to close the loading door when leaving the room where the product is located.
- store all detergents and additives in a safe place away from the reach of the children by closing the cover of the detergent container or sealing the detergent package.

1.3 Electrical safety

- The appliance is only used with the power supply unit provided with the appliance.
- If the product has a failure, it should not be operated unless it is repaired by the Authorised Service Agent. Risk of electric shock!
- This product is designed to resume operating in the event of powering on after a power interruption. If you wish to cancel the programme, see "Cancelling the programme" section.
- Plug the product into a grounded outlet protected by a 13 A fuse. Do not neglect to have the grounding installation made by a qualified electrician. Our company shall not be liable for any damages that will arise when the product is used without grounding in accordance with the local regulations.

- Do not wash the product by spraying or pouring water onto it! Risk of electric shock!
- Never touch the power cable plug with wet hands! Do not grab the power cord to unplug the machine, always unplug it by holding the socket with one hand, and pulling the plug with the other hand.
- Product should be unplugged during installation, maintenance, cleaning and repair procedures.
- If the power cable is damaged, it must be replaced by the manufacturer, after sales service or a similarly qualified person (preferably an electrician) or someone designated by the importer in order to avoid possible risks.

1.4 Hot surface safety

	While washing the laundry at high temperatures, the loading door glass will get hot. Considering this fact, during washing operation keep the children away from the loading door of the product to prevent them touching it.

2 Important instructions for environment

2.1 Compliance with WEEE Directive



This product complies with EU WEEE Directive (2012/19/EU). This product bears a classification symbol for waste electrical and electronic equipment (WEEE).

This product has been manufactured with high quality parts and materials which can be reused and are suitable for recycling. Do not dispose of the waste product with normal domestic and other wastes at the end of its service life. Take it to the collection center for the recycling of electrical and electronic equipment. Please consult your local authorities to learn about these collection centers.

Compliance with RoHS Directive:

The product you have purchased complies with EU RoHS Directive (2011/65/EU). It does not contain harmful and prohibited materials specified in the Directive.

2.2 Package information

Packaging materials of the product are manufactured from recyclable materials in accordance with our National Environment Regulations. Do not dispose of the packaging materials together with the domestic or other wastes. Take them to the packaging material collection points designated by the local authorities.

3 Intended use

- This product has been designed for domestic use. It is not for commercial purposes or it should not be used out of its intended use.
- The product must only be used for washing and rinsing of laundry that are marked accordingly.
- The manufacturer waives any responsibility arisen from incorrect usage or transportation.
- The service life of your product is 10 years. During this period, original spare parts will be available to operate the appliance properly.

4 Your washing machine

4.1 Overview

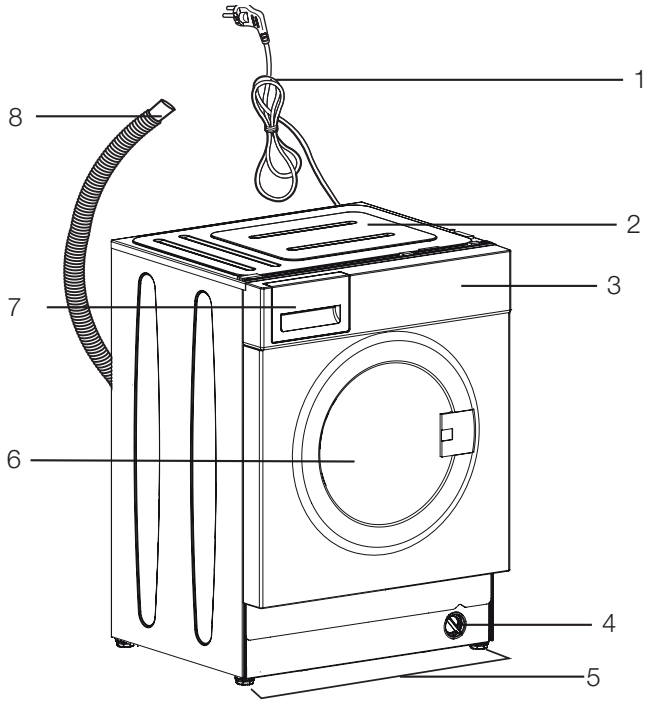

1- Power cable
2- Top panel
3- Control panel
4- Filter cap
5- Adjustable feet
6- Loading door
7- Detergent drawer
8- Drain hose

4.2 Package Contents

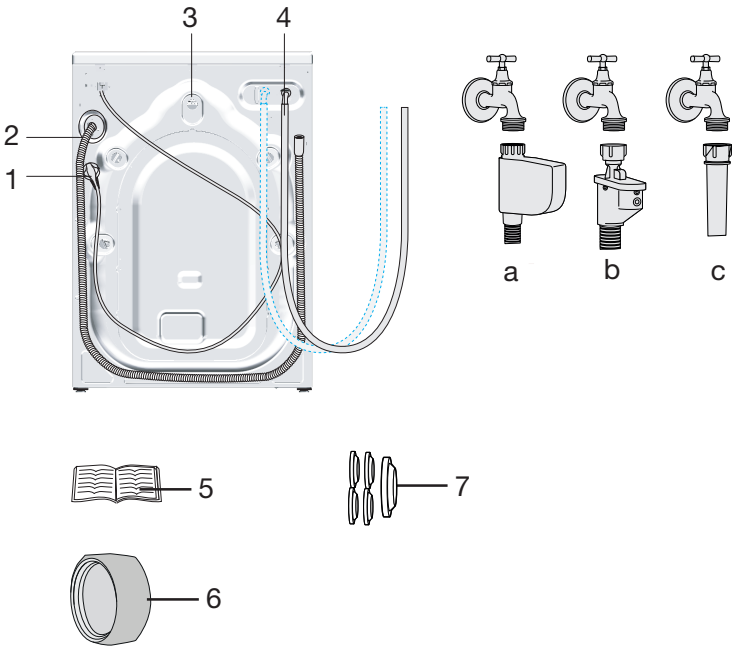

1- Power cable
2- Drain hose
3- Transportation safety bolts *
4- Mains water inlet hose (One of the following filter types is used for the mains hose connection.)
   a- Electronical water shut-off
   b- Mechanical water shut-off
   c- Standard
5- User Manual
6- Blind plug**
7- Plastic plug group

* Number of transportation safety bolts may change depending on the model of your machine.
** This is supplied if your machine is equipped with double water inlet.

Figures in this manual are schematic and may not match the product exactly.

4.3 Technical specifications

Complying Commission Delegated Regulation (EU) No 1061/2010	
Supplier name or trademark	Beko
Model name	WIR76540F1
Rated capacity (kg)	7
Energy efficiency class / Scale from A+++ (Highest Efficiency) to D (Lowest Efficiency)	A+++
Annual Energy Consumption (kWh) [1]	156
Energy consumption of the standard 60°C cotton programme at full load (kWh)	0,790
Energy consumption of the standard 60°C cotton programme at partial load (kWh)	0,620
Energy consumption of the standard 40°C cotton programme at partial load (kWh)	0,600
Power consumption in 'off-mode' (W)	0,400
Power consumption in 'left-on mode' (W)	0,800
Annual Water Consumption (l) [2]	9899
Spin-drying efficiency class / Scale from A (Highest Efficiency) to G (Lowest Efficiency)	A
Maximum spin speed (rpm)	1600
Remaining moisture Content (%)	44
Standard cotton programme [3]	Cotton Eco 60°C and 40°C
Programme time of the standard 60°C cotton programme at full load (min)	235
Programme time of the standard 60°C cotton programme at partial load (min)	200
Programme time of the standard 40°C cotton programme at partial load (min)	200
Duration of the left-on mode (min)	N/A
Airborne acoustical noise emissions washing/spinning (dB)	0
Built-in	Yes
Height (cm)	82
Width (cm)	60
Depth (cm)	55
Net weight (±4 kg.)	71
Single Water inlet / Double Water inlet • Available	• / -
Electrical input (V/Hz)	230 V / 50Hz
Total current (A)	10
Total power (W)	2200
Main model code	9211

[1] Energy Consumption based on 220 standard washing cycles for cotton programmes at 60°C and 40°C at full and partial load, and the consumption of the low-power modes. Actual energy consumption will depend on how the appliance is used.

[2] Water consumption based on 220 standard washing cycles for cotton programmes at 60°C and 40°C at full and partial load. Actual water consumption will depend on how the appliance is used.

[3] "Standard 60°C cotton programme" and the "standard 40°C cotton programme" are the standard washing programmes to which the information in the label and the fiche relates and these programmes are suitable to clean normally soiled cotton laundry and that they are the most efficient programmes in terms of combined energy and water consumption.

Technical specifications may be changed without prior notice to improve the quality of the product.

4.4 Installation

- Preparation of the location and electrical, tap water and waste water installations at the place of installation is under customer's responsibility.
- Make sure that the water inlet and discharge hoses as well as the power cable are not folded, pinched or crushed while pushing the product into its place after installation or cleaning procedures.
- Make sure that the installation and electrical connections of the product are performed by competent persons. Manufacturer shall not be held liable for damages that may arise from procedures carried out by unauthorized persons.
- Prior to installation, visually check if the product has any defects on it. If so, do not have it installed. Damaged products cause risks for your safety.

4.4.1 Appropriate installation location

- Place the product on a hard and level floor. Do not put it onto a carpet with high pile or other similar surfaces.
- When the washing machine and drier are placed on top of each other, their total weight -when loaded- amounts to 180 kilograms. Place the product on a solid and flat floor that has sufficient load carrying capacity!
- Do not place the product on the power cable.
- Do not install the product in the environments where the temperature falls below 0 °C.
- Leaving a gap at the sides of the machine is suggested to reduce vibration and noise.
- On a graduated floor, do not place the product next to the edge or on a platform.
- Do not place heat sources such as Hobs, Irons, Ovens, etc. on the washing machine and do not use them on the product.

4.4.2 Removing packaging reinforcement



Tilt the machine backwards to remove the packaging reinforcement. Remove the packaging reinforcement by pulling the ribbon. Do not make this operation alone by yourself.

4.4.3 Removing the transportation locks

1 Loose all bolts with an appropriate wrench until they turn freely.
2 Remove the transport safety bolts by turning them slightly.
3 Insert the plastic covers in the bag containing the user manual to the openings on the rear panel.

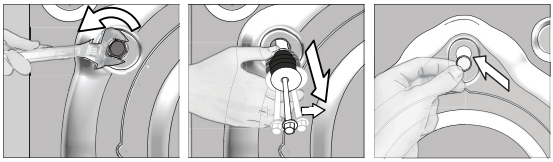

	CAUTION: Remove the transportation safety bolts before operating the washing machine! Otherwise, the product will be damaged.
	Keep the transportation safety bolts in a safe place to reuse when the washing machine needs to be moved again in the future.
	Install the transport safety bolts in reverse order of the disassembly procedure.
	Never move the product without the transportation safety bolts properly fixed in place!

4.4.4 Connecting water supply

	The water supply pressure required to run the product is between 1 to 10 bars (0.1 – 1 MPa). It is necessary to have 10 – 80 liters of water flowing from the fully open tap in one minute to have your machine run smoothly. Attach a pressure reducing valve if water pressure is higher.

	CAUTION: Models with a single water inlet should not be connected to the hot water tap. In such a case the laundry will get damaged or the product will switch to protection mode and will not operate.
	CAUTION: Do not use old or used water inlet hoses on the new product. It may cause stains on your laundry.

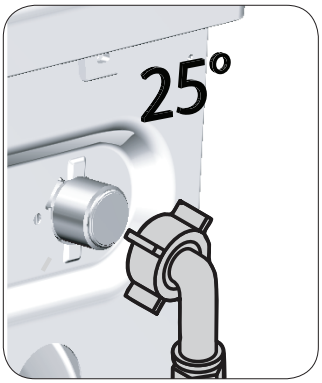

1 Tighten the nuts of the hose by hand. Never use a tool when tightening the nuts.
2 When hose connection is completed, check whether there is leak problems at the connection points by opening the taps fully. If any leaks occur, turn off the tap and remove the nut. Retighten the nut carefully after checking the seal. In order to prevent the water leaks and resultant damages, keep the taps closed when you do not use the product.

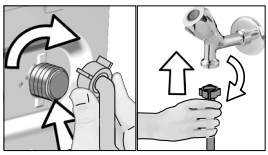

4.4.5 Connecting the drain hose to the drain

- Attach the end of the drain hose directly to waste water drain, lavatory or bathtub.

CAUTION: Your drain house will be flooded if the hose comes out of its housing during water discharge. Moreover, there is risk of scalding due to high washing temperatures! In order to prevent such situations and make sure that the machine performs water intake and discharge processes without any problem, fix the drain hose securely.

- Connect the drain hose to a minimum height of 40 cm and a maximum height of 100 cm.
- In case the drain hose is elevated after laying it on the floor level or close to the ground (less than 40 cm above the ground), water discharge becomes more difficult and the laundry may come out excessively wet. Therefore, follow the heights described in the figure.

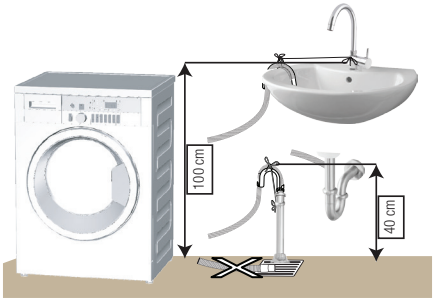

- To prevent the waste water to go back into the machine again and to ensure easy drainage, do not immerse the end of the hose into the waste water or do not insert it into the drain for more than 15 cm. If it is too long, cut it short.
- The end of the hose should not be bent, it should not be stepped on and the hose must not be pinched between the drain and the machine.
- If the length of the hose is too short, use it by adding an original extension hose. Length of the hose may not be longer than 3.2 m. To avoid water leak failures, the connection between the extension hose and the drain hose of the product must be fitted well with an appropriate clamp as not to come off and leak.

4.4.6 Adjusting the feet

	CAUTION: In order to ensure that the product operates more silently and vibration-free, it must stand level and balanced on its feet. Balance the machine by adjusting the feet. Otherwise, the product may move from its place and cause crushing and vibration problems.
	CAUTION: Do not use any tools to loosen the lock nuts. Otherwise, they will get damaged.

1 Loosen the lock nuts on the feet by hand.
2 Adjust the feet until the product stands in a stable and balanced way.
3. Tighten all lock nuts by hand again.

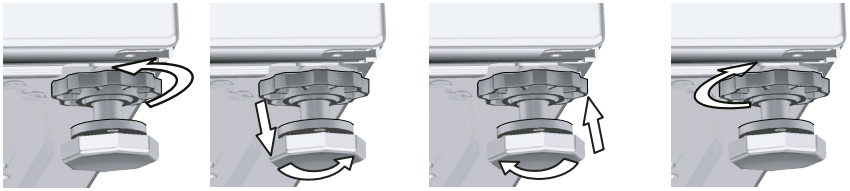

Adjusting Rear Feet

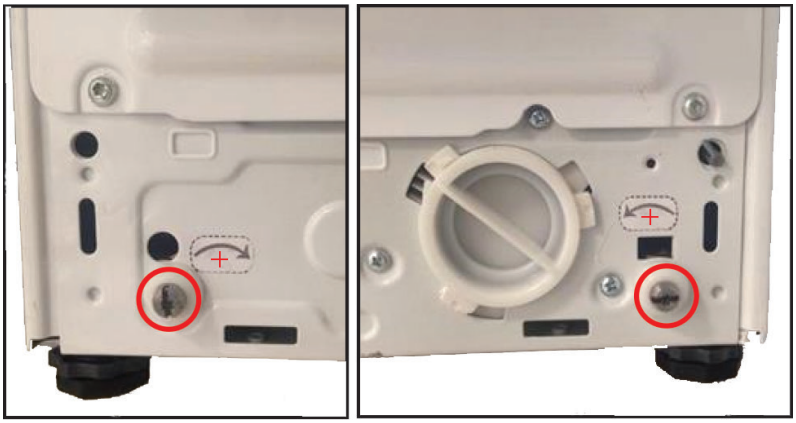

- When you turn the knob (visible in the circle) in the direction of the arrow, the machine will be elevated by 0.3 mm. When you turn it in the opposite direction of the arrow, the machine will be lowered by 0.3 mm.
- You can check your machine's rear and front feet via water gage for correct adjusment.
- Do not adjust the rear feet by using chargeable devices. Use a screwdriver instead.

Adjusting the feet with water level

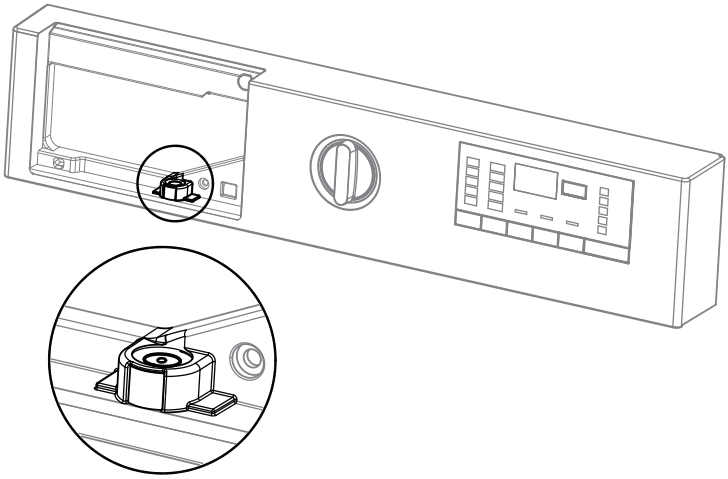

- You must remove the Detergent Drawer to set the Water Level.
- For the system to operate properly, the bubble inside the Water Level must be in the **middle**.
- If the bubble inside the Water Level is on the **left**, the pre-set **right** foot of the Washing Machine must be adjusted.
- If the bubble inside the Water Level is on the **right**, the pre-set **left** foot of the Washing Machine must be adjusted.
- If the bubble inside the Water Level is at the **back**, the pre-set **front** feet of the Washing Machine must be turned to the left (clockwise).
- If the bubble inside the Water Level is at the **front**, the pre-set **front** feet of the Washing Machine must be turned to the right (anti-clockwise).

4.4.7 Electrical connection

Connect the product to a grounded outlet protected by a 13 A fuse. Our company shall not be liable for any damages that will arise when the product is used without grounding in accordance with the local regulations.

- Connection must comply with national regulations.
- The wiring for the electrical outlet circuit must be sufficient to meet the appliance requirements. Use of a Groud Fault Circuit Interrupter (GFCI) is recommended.
- Power cable plug must be within easy reach after installation.
- If the current value of the fuse or breaker in the house is less than 13 Amps, have a qualified electrician install a 13 Amp fuse.
- The voltage specified in the "Technical specifications" section must be equal to your mains voltage.
- Do not make connections via extension cables or multi-plugs.

WARNING: Damaged power cables must be replaced by the Authorised Service Agents.

Electrical requirements

Before you insert the plug into the wall socket make sure that the voltage and the frequency shown in the rating label corresponds to your electricity supply.
We recommend that this appliance be connected to the mains supply via a suitable switched and fused socket in a readily accessible position.
Should the mains lead of the appliance become damaged or need replacing at any time, it must be replaced by a special purpose made mains lead which can only be obtained from a Authorised Service Agent.

WARNING: This appliance must be earthed

If the fitted moulded plug is not suitable for your socket, then the plug should be cut off and an appropriate plug fitted.
Destroy the old plug, which is cut off as a plug with a bared cord could cause a shock hazard if inserted into a socket elsewhere in the house.
The moulded plug on this appliance incorporates a 13A fuse. Should the fuse need to be replaced an ASTA approved BS1362 fuse of the same rating must be used. Do not forget to refit the fuse cover. In the event of losing the fuse cover, the plug must not be used until a replacement fuse cover has been fitted. Colour of the replacement fuse cover must be the same colour as that visible on the pin face of the plug. Fuse covers are available from any good electrical store.

Important
Fitting a different plug

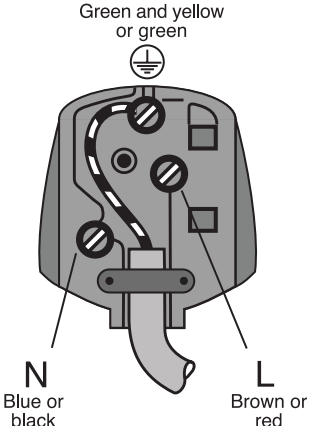

As the colours of the wires in the mains lead of this appliance may not correspond with the coloured markings identifying the terminals on your plug, proceed as follows:

1 Connect the green - yellow or green (earth) wire to the terminal in the plug marked 'E' or with the symbol f or coloured green and yellow or green.
2 Connect the blue (neutral) wire to the terminal in the plug marked 'N' or coloured black.
3 Connect the brown (live) wire to the terminal in the plug marked 'L' or coloured red.

With the alternative plugs a 13A fuse must be fitted either in the plug or adaptor or in the main fuse box. If in doubt contact a qualified electrician.

Transportation of the product

1. Unplug the product before transporting it.
2. Remove water drain and water supply connections.
3. Drain all water that has remained in the product.
4. Install transportation safety bolts in the reverse order of removal procedure.

	Never move the product without the transportation safety bolts properly fixed in place!
	WARNING: Packaging materials are dangerous to children. Keep packaging materials in a safe place away from reach of the children.

4.4.8 Initial use



Before starting to use the product make sure that the preparations are made which are in line with the "Important Safety and Environment Instructions" and the instructions in the "Installation" section.
To prepare the product for washing laundry, perform first operation in Drum Cleaning programme. If this program is not available in your machine, apply the method which is described in the section 4.7.2.

	Use an anti-limescale suitable for the washing machines.
	Some water might have remained in the product due to the quality control processes in the production. It is not harmful for the product.

4.5 Preparation

4.5.1 Sorting the laundry

- Sort laundry according to type of fabric, colour, and degree of soiling and allowable water temperature.
- Always obey the instructions given on the garment tags.

LAUNDRY WASH SYMBOLS

WASH	Machine Wash Symbols	Normal wash	No Iron	Sensitive-Delicate wash	Hand wash	Not washable	No Spin	
	Water Temperatures	Maximum	95°C	70°C	60°C	50°C	40°C	30°C
		Symbol(s)	●●● ●●●	●●● ●●	●● ●●	●●●	●●	●
DRYING	Drying Symbols	Suitable for dryer	No Iron	Sensitive / Delicate dry	Do not dry with dryer	Do not dry	Do not dry-clean	
	Drying Settings	At any temperature	At high temperature	At medium temperature	At low temperature	Without heating	Hang to dry	Lay to dry	Hang wet to dry	Lay in shadow to dry	Dry-cleanable
IRON	Iron -		Iron at high temperature	Iron at medium temperature	Iron at low temperature	Do not iron	Iron without steam	
	Dry or Steam							
	Maximum temperature		200 °C	150 °C	110 °C			
BLEACH		All bleaches are allowed		Bleach (sodium hypochlorite) can be used	Bleach is not allowed	Only bleaches without chlorine are allowed		

4.5.2 Preparing laundry for washing

- Laundry items with metal attachments such as, underwired bras, belt buckles or metal buttons will damage the machine. Remove the metal pieces or wash the clothes by putting them in a laundry bag or pillow case.
- Take out all substances in the pockets such as coins, pens and paper clips, and turn pockets inside out and brush. Such objects may damage the product or cause noise problem.
- Put small size clothes such as infant's socks and nylon stockings in a laundry bag or pillow case.
- Place curtains in without compressing them. Remove curtain attachment items.
- Fasten zippers, sew loose buttons and mend rips and tears.
- Wash "machine washable" or "hand washable" labeled products only with an appropriate programme.
- Do not wash colours and whites together. New, dark coloured cottons release a lot of dye. Wash them separately.
- Tough stains must be treated properly before washing. If unsure, check with a dry cleaner.
- Use only dyes/colour changers and limescale removers suitable for machine wash. Always follow the instructions on the package.
- Wash trousers and delicate laundry turned inside out.
- Keep laundry items made of Angora wool in the freezer for a few hours before washing. This will reduce pilling.
- Laundry that are subjected to materials such as flour, lime dust, milk powder, etc. intensely must be shaken off before placing into the machine. Such dusts and powders on the laundry may build up on the inner parts of the machine in time and can cause damage.

4.5.3 Things to be done for energy saving

Following information will help you use the product in an ecological and energy-efficient manner.

- Operate the product in the highest capacity allowed by the programme you have selected, but do not overload; see, "Programme and consumption table".
- Always follow the instructions on the detergent packaging.
- Wash slightly soiled laundry at low temperatures.
- Use faster programmes for small quantities of lightly soiled laundry.
- Do not use prewash and high temperatures for laundry that is not heavily soiled or stained.
- If you plan to dry your laundry in a dryer, select the highest spin speed recommended during washing process.
- Do not use detergent in excess of the amount recommended on the detergent package.

4.5.4 Loading the laundry

1. Open the loading door.
2. Place laundry items loosely into the machine.
3. Push the loading door to close until you hear a locking sound. Ensure that no items are caught in the door.

4.5.5 Correct load capacity

The maximum load capacity depends on the type of laundry, the degree of soiling and the washing programme desired.
The machine automatically adjusts the amount of water according to the weight of the loaded laundry.



WARNING: Follow the information in the "Programme and consumption table". When overloaded, machine's washing performance will drop. Moreover, noise and vibration problems may occur.

4.5.6 Using detergent and softener



When using detergent, softener, starch, fabric dye, bleach or limescale remover read the manufacturer's instructions on the package carefully and follow the suggested dosage values. Use measuring cup if available.

Detergent Drawer

Detergent drawer of your washing machine consists of four different compartments for powder main wash detergent, liquid main wash detergent, liquid softener and powder pre-wash detergent. Each of these laundry additives are dispensed automatically in the relevant time during the washing Programme.
Do not place the laundry additives directly into the drum. Always use the detergent drawer.
Do not close the drawer too fast after putting the laundry additives. This may cause the additives be dispensed early, creating unsatisfactory washing results and fabric damage.



Do not open the drawer during washing Programme.

The detergent drawer compartments are indicated below:

1) Left compartment with number "II" (Main wash compartment for powder detergent or powder bleach/stain remover)
2) Left compartment with number "II ♦" (Main wash compartment for liquid detergent or liquid stain remover)
3) Middle compartment with number "I" (pre-wash compartment for powder detergent, powder stain remover or liquid bleach - liquid bleach must be added either during the pre-wash or during the first rinsing step of the washing Programme). Liquid bleach must be added manually while the machine takes in water.

4) Right compartment with "❁" symbol (liquid softener compartment)

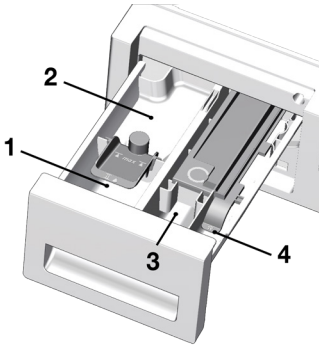

(II) Main Wash Compartment

Before starting the washing Programme, put powder detergent into the left compartment with number "II". Use the detergent manufacturer's measuring cup and follow the instructions on the package. Powder bleach/stain remover must also be put into this compartment.

Put the liquid detergent into the main wash compartment with number "II 💧" before starting the washing Programme. Liquid stain remover must be put into this compartment.

Put the suggested amount of liquid detergent into the left compartment with "II 💧" symbol and dilute it to the maximum filling level line (max. II 💧) with warm water.

Particularly the concentrated detergents must be diluted with warm water; otherwise, the siphon may get clogged in time.

Do not fill the detergent above the maximum filling level line; otherwise the excess amount of detergent will reach the laundry without water and may cause stains on the garments.In this case you will need to refill the compartment. Do not pour the detergent onto the laundry directly since this may cause stains on the garments.

Liquid Softener Compartment

Put the suggested amount of liquid softener into the right compartment with "❁" symbol and dilute it to the maximum filling level line (max. ❁) with warm water.

Particularly the concentrated softeners must be diluted with warm water; otherwise, the siphon may get clogged in time.

Do not fill the softener above the maximum filling level line; otherwise the excess amount of softener will get mixed with the washing water and you will need to refill the compartment. Do not pour the softener onto the laundry directly since this may cause stains on the garments.

Liquid softener will be dispensed automatically at the final rinsing step of the washing Programme.

(I) Pre-Wash Compartment

Put the powder pre-wash detergent or powder stain remover into the middle compartment with number "I".

You can also put liquid bleach into this compartment while the machine takes in water during pre-wash or first rinsing step. Adding the liquid bleach while the machine takes in water allows it to be diluted before it is poured onto the laundry.

You must select extra rinsing option if you use liquid bleach in a washing Programme. Bleach must be removed from the laundry with rinsing; otherwise it may cause itching on the skin.



Read the dosage instructions and label of your garments carefully before using the liquid bleach.

Starch

- Add liquid starch, powder starch or the dyestuff into the softener compartment as instructed on the package.
- Never use fabric softener and starch together in the same washing cycle.
- Wipe the inside of the drum after using starch.

Bleaches

If you are going to use regular bleach in your machine, it is suggested to select a Programme with pre-wash step and add the bleach at the beginning of the pre-wash without putting detergent into the pre-wash compartment. Alternatively, it is suggested to select a Programme with extra rinsing and add the bleach while the machine takes in water from the detergent drawer in the first rinsing step. Bleach should not be mixed with detergent. Since the bleach may cause irritation on skin, little amounts must be used and rinsed thoroughly. Do not pour bleach directly onto the laundry and do not use it with colour laundry.

When using oxygen based bleach, follow the instructions on the package and select a Programme at low temperature. Oxygen based bleach can be used together with the detergent. However, if it is not at the same thickness with the detergent, then it must be added from the compartment number "II" right after the detergent foams with water.

Eliminating lime formation

- When required, use only appropriate lime removers developed specifically for washing machines and always follow the instructions on the package.

4.5.7 Tips for efficient washing

		Clothes			
		Light colours and whites	**Colours**	**Dark colours**	**Delicates/ Woolens/Silks**
		(Recommended temperature range based on soiling level: 40-90°C)	(Recommended temperature range based on soiling level: cold-40°C)	(Recommended temperature range based on soiling level: cold-40°C)	(Recommended temperature range based on soiling level: cold-30°C)
Soiling Level	**Heavily Soiled** (difficult stains such as grass, coffee, fruits and blood.)	It may be necessary to pre-treat the stains or perform prewash. Powder and liquid detergents recommended for whites can be used at dosages recommended for heavily soiled clothes. It is recommended to use powder detergents to clean clay and soil stains and the stains that are sensitive to bleaches.	Powder and liquid detergents recommended for colours can be used at dosages recommended for heavily soiled clothes. It is recommended to use powder detergents to clean clay and soil stains and the stains that are sensitive to bleaches. Use detergents without bleach.	Liquid detergents suitable for colours and dark colours can be used at dosages recommended for heavily soiled clothes.	Prefer liquid detergents produced for delicate clothes. Woolen and silk clothes must be washed with special woolen detergents.
	Normally Soiled (For example, stains caused by body on collars and cuffs)	Powder and liquid detergents recommended for whites can be used at dosages recommended for normally soiled clothes.	Powder and liquid detergents recommended for colours can be used at dosages recommended for normally soiled clothes. Use detergents without bleach.	Liquid detergents suitable for colours and dark colours can be used at dosages recommended for normally soiled clothes.	Prefer liquid detergents produced for delicate clothes. Woolen and silk clothes must be washed with special woolen detergents.
	Lightly Soiled (No visible stains exist.)	Powder and liquid detergents recommended for whites can be used at dosages recommended for lightly soiled clothes.	Powder and liquid detergents recommended for colours can be used at dosages recommended for lightly soiled clothes. Use detergents without bleach.	Liquid detergents suitable for colours and dark colours can be used at dosages recommended for lightly soiled clothes.	Prefer liquid detergents produced for delicate clothes. Woolen and silk clothes must be washed with special woolen detergents.

4.6 Operating the product

4.6.1 Control panel

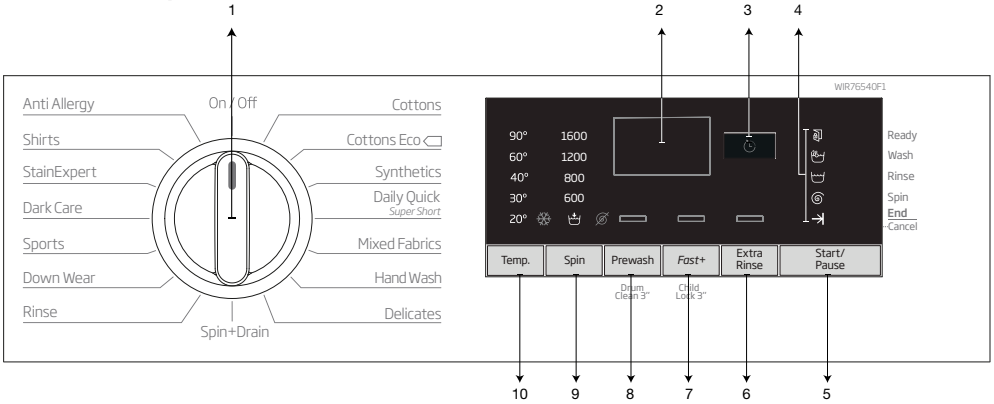

1 - Programme Selection knob (Uppermost position On / Off)
2 - Display
3 - Delayed Start Indicator
4 - Programme Follow-up indicator
5 - Start / Pause button
6 - Auxiliary function button 3
7 - Auxiliary function button 2
8 - Auxiliary function button 1
9 - Spin Speed Adjustment button
10 - Temperature Adjustment button

4.6.2 Preparing the machine

1.Make sure that the hoses are connected tightly.
2.Plug in your machine.
3.Turn the tap on completely.
4.Place the laundry in the machine.
5.Add detergent and fabric softener.

4.6.3 Programme selection and tips for efficient washing

1.Select the programme suitable for the type, quantity and soiling degree of the laundry in accordance with the "Programme and consumption table" and the temperature table below.
2.Select the desired programme with the Programme Selection knob.

Indicative values for Synthetics programmes						
	Load (kg)	Water Consumption (l)	Energy Consumption (kWh)	Programme Duration (min) *	Remaining Moisture Content (%) ** ≤ 1000 rpm	Remaining Moisture Content (%) ** > 1000 rpm
Synthetics 60	3	65	1.20	115/140	45	40
Synthetics 40	3	63	0.75	115/140	45	40
* You can see the washing time of the programme you have selected on the display of the machine. It is normal that small differences may occur between the time shown on the display and the real washing time.						
** Remaining moisture content values may differ according to the selected spin speed.						

4.6.4 Programme and consumption table

EN					Auxiliary functions				
Programme		Max. Load (kg)	Water Consumption (l)	Energy Consumption (kWh)	Max. Speed***	Prewash	Fast+	Extra Rinse	Selectable temperature range °C
Cottons	90	7	92	2,25	1600	•	•	•	Cold-90
	60	7	92	1,70	1600	•	•	•	Cold-90
	40	7	89	1,05	1600	•	•	•	Cold-90
Cottons Eco	60**	7	51	0,790	1600				Cold-60
	60**	3,5	40,5	0,620	1600				Cold-60
	40**	3,5	40,5	0,600	1600				Cold-60
Synthetics	60	3	65	1,20	1200	•	•	•	Cold-60
	40	3	63	0,75	1200	•	•	•	Cold-60
Daily Quick / Super Short	90	7	62	2,00	1400		•	•	Cold-90
	60	7	62	1,10	1400		•	•	Cold-90
	30	7	60	0,20	1400		•	•	Cold-90
Daily Quick / Super Short + Fast+	30	2	41	0,15	1400		•	•	Cold-30
Mixed Fabrics	40	3,5	65	0,75	800	•	•		Cold-40
Hand Wash	40	1,5	55	0,55	1200			•	Cold-40
Delicates	40	3,5	51	0,65	1200			•	Cold-40
Down Wear	60	2	70	1,25	1000			•	Cold-60
Sports	40	3,5	44	0,45	1200	•			Cold-40
Dark Care	40	3	82	0,85	1200	•		*	Cold-40
StainExpert	60	3,5	70	1,50	1600	•	•		30 - 60
Shirts	60	3	59	1,20	800	•	•	•	Cold-60
Anti Allergy	90	7	119	2,40	1600			*	20-90
Drum Clean	90	-	73	2,10	600				90

• : Selectable
* : Automatically selected, no canceling.
** : Energy Label programme (EN 60456 Ed.3)
***: If maximum spin speed of the machine is lower then this value, you can only select up to the maximum spin speed.
- : See the programme description for maximum load.

** "Cotton Economic 40°C and Cotton Economic 60°C are standard programmes." These programmes are known as '40°C cotton standard programme' and '60°C cotton standard programme' and indicated with the 40° 60° symbols on the panel.

Water and power consumption may vary subject to the changes in water pressure, water hardness and temperature, ambient temperature, type and amount of laundry, selection of auxiliary functions and spin speed, and changes in electric voltage.

You can see the washing duration on the display of your machine while selecting a programme. Depending on the amount of laundry you have loaded into your machine, there may be a difference of 1-1.5 hours between the duration shown on the display and the actual duration of the wash cycle. Duration will be automatically updated soon after the washing starts.

The auxiliary functions in the table may vary according to the model of your machine.

4.6.5 Main programmes

Depending on the type of fabric, use the following main programmes.

• Cottons

You can wash your durable cotton laundry (sheets, bedlinen, towels, bathrobes, underwear etc.) in this programme. When the quick wash function button is pressed, programme duration becomes notably shorter but effective washing performance is ensured with intense washing movements. If the quick wash function is not selected, superior washing and rinsing performance is ensured for your heavily soiled laundry.

• Synthetics

You can wash your laundry (such as shirts, blouses, synthetic/cotton blended fabrics etc.) in this programme. The programme duration gets notable shorter and washing with high performance is ensured. If the quick wash function is not selected, superior washing and rinsing performance is ensured for your heavily soiled laundry.

• Hand Wash

Use to wash your woolen/delicate laundry. Select the appropriate temperature complying with the tag of your clothes. Your laundry will be washed with a very gentle washing action in order not to damage the clothes.

4.6.6 Additional programmes

For special cases, additional programmes are available in the machine.

Additional programmes may differ according to the model of the machine.

• Cottons Eco

Use to wash your normally soiled, durable cotton and linen laundry. Although it washes longer than all other programmes, it provides high energy and water savings. Actual water temperature may be different from the stated wash temperature. When you load the machine with less laundry (e.g. ½ capacity or less), periods in programme stages may automatically get shorter. In this case, energy and water consumption will decrease more, providing a more economic wash.

• Anti Allergy

Use this programme for your laundry for which you require an anti-allergic and hygienic washing at high temperature with intensive and long washing cycle. The high level of hygiene is ensured thanks to long heating duration and additional rinsing step.

• Programme was tested by the "VDE" institute with the 20°C temperature option selected and it was certified in terms of its efficacy in eliminating bacteria and mould.

• Programme was tested by "The British Allergy Foundation" (Allergy UK) with the 60°C temperature option selected and it was certified in terms of its efficacy in eliminating allergens in addition to bacteria and mould.

	Allergy UK is the brand of the British Allergy Association. Seal of Approval is created to guide people that require recommendation about a product that the related product restricts / reduces / eliminates the allergens or reduces the allergen content significantly in the ambient where allergy patients exist. It aims to provide assurance that the products are tested scientifically or examined in a way to provide measurable results.

• Delicates

You can wash your delicate clothes such as cotton/synthetic blended knitwear or hosiery in this programme. It washes with more delicate washing action. Wash your clothes whose colour you want to preserve either at 20degrees or by selecting the cold wash option.

• Daily Quick / Super Short

Use this programme to wash your lightly soiled or unspotted cotton clothes in a short time. The programme duration can be reduced up to 14 minutes when the quick wash function is selected. When the quick wash function is selected, maximum 2 (two) kg of laundry must be washed.

• Dark Care

Use this programme to protect the colour of your dark-coloured garments or jeans. It performs high performance washing with special drum movement even if the temperature is low. It is recommended to use liquid detergent or woolen shampoo for dark coloured laundry. Do not wash your delicate clothes containing wool or etc.

• Mixed Fabrics

Use to wash your cotton and synthetic clothes together without sorting them.

• Shirts

This programme is used to wash the shirts made from cotton, synthetic and synthetic blended fabrics altogether. It reduces wrinkles. When the quick wash function is selected, the Pre-treatment algorithm is executed.

• Apply the pre-treatment chemical on your garments directly or add it together with detergent when the machine starts to take water from the main washing compartment. Thus, you can obtain the same performance as you obtain with normal washing in a much shorter period of time. Usage life of your shirts increases.

• Sports

You can use this programme to wash sports and outdoors garments that contain cotton/ synthetics mix and water repellent covers such as gore-tex etc. It makes sure your garments are washed gently thanks to special rotating movements.

• Down Wear

Use this programme to wash your coats, vest, jackets etc. containing feathers with a "machine-washable" label on them. Thanks to special spinning profiles, it is ensured that the water reaches the air gaps amongst the feathers.

• StainExpert

The machine has a special stain programme which enables the removal of different types of stains in the most effective way. Use this programme only for durable colourfast cotton laundry. Do not wash delicate and pigmenting clothes and laundry in this programme. Before washing, garment tags should be checked (recommended for cotton shirts, trousers, shorts, t-shirts, baby clothes, pyjamas, aprons, table clothes, beddings, duvet cover, bed sheet, pillowcase, bath-beach towel, towel, socks, cotton underwear that are suitable for washing at high temperature and long time). In the automatic stain programme, you can wash 24 types of stains divided into two different groups according to quick function selection. You can see stain groups based on the selection of the quick function.

You can find stain groups based on quick function below:

When quick function is selected:		
Blood	Tea	Red Wine
Chocolate	Coffee	Curry
Pudding	Fruit juice	Jam
Egg	Ketchup	Coal

When quick function is not selected:		
Butter	Sweat	Salad Dressing
Grass	Collar Soil	Make-up
Mud	Food	Machine Oil
Coke	Mayonnaise	Baby Food

• Select the stain programme.

• Select the stain you want to clean by locating it in the groups above and selecting the related group with the quick auxiliary function button.

• Read the garment tag carefully and ensure that correct temperature and spin speed are selected.

4.6.7 Special programmes

For specific applications, select any of the following programmes.

• Rinse

Use when you want to rinse or starch separately.

• Spin+Drain

You can use this function to remove the water on the garment of drain the water in the machine.

Before selecting this programme, select the desired spin speed and press Start / Pause button. First, the machine will drain the water inside of it. Then, it will spin the laundry with the set spin speed and drain the water coming out of them.

If you wish to drain only the water without spinning your laundry, select the Pump+Spin programme and then select the No Spin function with the help of Spin Speed Adjustment button. Press Start / Pause button.



Use a lower spin speed for delicate laundries.

4.6.8 Temperature selection

Whenever a new programme is selected, the recommended temperature value for the selected programme appears on the temperature indicator.
To decrease the temperature, press the Temperature Adjustment button. Temperature will decrease gradually. Temperature level lights will not turn on when the cold level is selected.



If the programme has not reached the heating step, you can change the temperature without switching the machine to Pause mode.

4.6.9 Spin speed selection

Whenever a new programme is selected, the recommended spin speed of the selected programme is displayed on the spin speed indicator.
To decrease the spin speed, press the Spin Speed Adjustment button. Spin speed decreases gradually. Then, depending on the model of the product, "Rinse Hold" and "No Spin" options appear on the display. When "No Spin" is selected, the rinse level indicator lights will not turn on.

Rinse hold

If you are not going to unload your clothes immediately after the programme completes, you can use rinse hold function to keep your laundry in the final rinsing water in order to prevent them from getting wrinkled when there is no water in the machine. Press Start / Pause button after this process if you want to drain the water without spinning your laundry. Programme will resume and complete after draining the water.
If you want to spin the laundry held in water, adjust the Spin Speed and press Start / Pause button.
The programme will resume. Water is drained, laundry is spun and the programme is completed.



If the programme has not reached the spinning step, you can change the speed without switching the machine to Pause mode.

4.6.10 Auxiliary function selection

Select the desired auxiliary functions before starting the programme. Furthermore, you may also select or cancel auxiliary functions that are suitable to the running programme without pressing the Start / Pause button when the machine is operating. For this, the machine must be in a step before the auxiliary function you are going to select or cancel. If the auxiliary function cannot be selected or canceled, light of the relevant auxiliary function will blink 3 times to warn the user.

If a second auxiliary function conflicting with the first one is selected before starting the machine, the function selected first will be canceled and the second auxiliary function selection will remain active.
An auxiliary function that is not compatible with the programme cannot be selected. (See, "Programme and consumption table")
Auxiliary Function buttons may vary according to the model of the machine.

4.6.10.1 Auxiliary functions

• Prewash

A Prewash is only worthwhile for heavily soiled laundry. Not using the Prewash will save energy, water, detergent and time.

Prewash without detergent is recommended for tulle and curtains.

• Fast+

When this function is selected, the durations of the relevant programmes get shorter by 50%.

Thanks to the optimised washing steps, high mechanic activity and optimum water consumption,

high washing performance is achieved in spite of the reduced duration.

When you select this function, load your machine with half of the maximum laundry specified in the programme table.

• Extra Rinse

This function enables the product to make another rinsing in addition to the one already made after the main wash. Thus, the risk for sensitive skins (babies, allergic skins, etc.) to be effected by the minimal detergent remnants on the laundry can be reduced.

4.6.10.2 Functions/Programmes Selected by Pressing the Function Buttons for 3 Seconds

• Drum Clean 3"  3"

Press and hold the auxiliary function button 1 for 3 seconds to select the programme. Use regularly (once in every 1-2 months) to clean the drum and provide the required hygiene. Operate the programme while the machine is completely empty. To obtain better results, put powder lime-scale remover for washing machines into the detergent compartment no. "2". When the programme is over, leave the loading door ajar so that the inside of the machine gets dry.

	This is not a washing programme. It is a maintenance programme.
	Do not run the programme when there is something in the machine. If you try to do so, the machine detects that there is load inside and aborts the programme.

• Child lock 3"

Use Child Lock function to prevent children from tampering with the machine. Thus you can avoid any changes in a running programme.

	If the Programme Selection knob is turned when the Child Lock is active, "Con" appears on the display. The Child Lock does not allow any change in the programmes and the selected temperature, speed and auxiliary functions.
	Even if another programme is selected with the Programme Selection knob while the Child Lock is active, previously selected programme will continue running.

To activate the Child Lock:

2. Pres and hold the Auxiliary Function button for 3 seconds. C03, C02, C01 will appear on the display respectively while you keep the button pressed for 3 seconds. Then, while the light of the Auxiliary Function button 2 is flashing, "Con" will appear on the display indicating that the child lock has been activated. If you press any button or turn the Programme Selection knob when the Child Lock is active, same phrase will appear on the display.

To deactivate the Child Lock:

Press and hold the Auxiliary Function button 2 for 3 seconds while a programme is running. C03, C02, C01 will appear on the display respectively while you keep the button pressed for 3 seconds. Then, while the light of the auxiliary function button 2 is flashing, "COF" will appear on the display indicating that the child lock has been deactivated.

	In addition to the method above, to deactivate the Child Lock, switch the Programme Selection knob to On / Off position when no programme is running, and select another programme.
	Child Lock is not deactivated after power failures or when the machine is unplugged.

4.6.11 Delayed Start

With the Delayed Start function the startup of the programme may be delayed up to 19 hours. Delayed start time can be increased by increments of 1 hour.

Do not use liquid detergents when you set Delayed Start! There is the risk of staining of the clothes.

1. Open the loading door, place the laundry and put detergent, etc.
2. Select the washing programme, temperature, spin speed and, if required, the auxiliary functions.
3. Set the desired time by pressing the Delayed Start button.
4. Press Start / Pause button. The delayed start time you have set is displayed. Delayed start countdown starts. "_" symbol next to the delayed start time moves up and down on the display.

Additional laundry may be loaded during the delayed start period.

5. At the end of the countdown, duration of the selected programme will be displayed. "_" will disappear and the selected programme will start.

Changing the delayed start period

If you want to change the time during countdown:

1. Press the Delayed Start button. Time will increase by 1 hour each time you press the button.
2. If you want to decrease the delayed start time, press Delayed Start button repeatedly until the desired delayed start time appears on the display.

Canceling the Delayed Start function

If you want to cancel the delayed start countdown and start the programme immediately:

1. Set the Delayed Start period to zero or turn the Programme Selection knob to any programme. Thus, Delayed Start function will be canceled. The End/Cancel light flashes continuously.
2. Then, select the programme you want to run again.
3. Press Start / Pause button to start the programme.

4.6.12 Starting the programme

1. Press Start / Pause button to start the programme.
2. Programme follow-up light showing the startup of the programme will turn on.

If no programme is started or no button is pressed within 1 minute during programme selection process, the machine will switch to Pause mode and the illumination level of the temperature, speed and loading door indicator lights will decrease. Other indicator lights and indicators will turn off. Once the Programme Selection knob is rotated or any button is pressed, indicator lights and indicators will turn on again.

4.6.13 Progress of programme

Progress of a running programme can be followed from the Programme Follow-up indicator. At the beginning of every programme step, the relevant indicator light will turn on and light of the completed step will turn off.
You can change the auxiliary functions, speed and temperature settings without stopping the programme flow while the programme is running. To do this, the change you are going to make must be in a step after the running programme step. If the change is not compatible, relevant lights will flash for 3 times.



If the machine does not pass to the spinning step, Rinse Hold function might be active or the automatic unbalanced load detection system might be activated due to the unbalanced distribution of the laundry in the machine.

4.6.14 Loading door lock

There is a locking system on the loading door of the machine that prevents opening of the loading door in cases when the water level is unsuitable.
Loading door light will start flashing when the machine is switched to Pause mode.
Machine checks the level of the water inside. If the level is suitable, Loading Door light illuminates steadily within 1-2 minutes and the loading door can be opened.
If the level is unsuitable, Loading Door light turns off and the loading door cannot be opened. If you are obliged to open the Loading Door while the Loading Door light is off, you must cancel the current programme. See. "Cancelling the programme"

4.6.15 Changing the selections after programme has started

Switching the machine to pause mode

Press the Start / Pause button to switch the machine to pause mode while a programme is running. The light of the step which the machine is in starts flashing in the Programme Follow-up indicator to show that the machine has been switched to the pause mode.
Also, when the loading door is ready to be opened, Loading Door light will also illuminate continuously in addition to the programme step light.

Changing the auxiliary function, speed and temperature

Depending on the step the programme has reached, you can cancel or select the auxiliary functions. See, "Auxiliary function selection".
You can also change the speed and temperature settings. See, "Spin speed selection" and "Temperature selection".



If no change is allowed, the relevant light will flash 3 times.

Adding or taking out laundry

1. Press Start / Pause button to switch the machine to pause mode. The programme follow-up light of the relevant step during which the machine was switched into the pause mode will flash.
2. Wait until the Loading Door can be opened.
3. Open the Loading Door and add or take out the laundry.
4. Close the Loading Door.
5. Make changes in auxiliary functions, temperature and speed settings if necessary.
6. Press Start / Pause button to start the machine.

4.6.16 Cancelling the programme

To cancel the programme, turn the Programme Selection knob to select another programme. Previous programme will be cancelled. End / Cancel light will flash continuously to notify that the programme has been canceled.
Your machine will end the programme when you turn the Programme Selection knob; however, it does not drain the water inside. When you select and start a new programme, the newly selected programme will start depending on the step the previous programme was canceled in. For example, it may take in additional water or continue to wash with the water inside.



Depending on the step where the programme was canceled in, you may have to put detergent and softener again for the programme you have selected anew.

4.6.17 End of programme

"End" appears on the display at the end of the programme.

1. Wait until the loading door light illuminates steadily.
2. Press On / Off button to switch off the machine.
3. Take out your laundry and close the loading door. Your machine is ready for the next washing cycle.

4.6.18 Your machine features "Standby Mode".

After you switch on your machine with On-Off button, if no programme is started or no other procedure is performed at the selection step or no action is taken within approx. 2 minutes after the selected programme ends, your machine will switch to energy saving mode automatically. The brightness of the indicator lights will decrease. Also, if your product has a display that shows programme time, this display will be completely turned off. If you turn the Programme Selection knob or touch any button, lights and display will switch back to previous condition. The selections which you make when exiting from the energy efficiency may change. Please check the correctness of your selections before starting the programme. If necessary, please make your settings again. This is not an error.

4.7 Maintenance and cleaning

Service life of the product extends and frequently faced problems decrease if cleaned at regular intervals.

4.7.1 Cleaning the detergent drawer

Remove any powder residue buildup in the drawer. To do this;

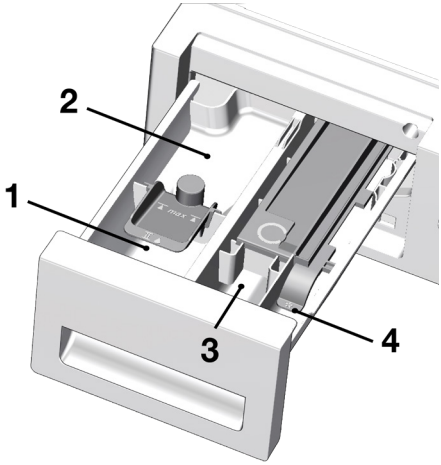

a. You can remove the detergent drawer by pulling it towards yourself strongly.

	If more than a normal amount of softener and liquid detergent mixture starts to remain in the softener compartment, the siphon must be cleaned.

b. Wash the drawer and the siphon with plenty of lukewarm water in a washbasin. Wear protective gloves or use an appropriate brush to avoid touching the residues in the drawer when cleaning.
c. Replace the drawer into its housing after cleaning. Check if the siphon is in its original location.

4.7.2 Cleaning the loading door and the drum

For products with drum cleaning programme, please see Operating the product - Programmes.

	Repeat Drum Cleaning process in every 2 months.
	Use an anti-limescale suitable for the washing machines.

After every washing make sure that no foreign substance is left in the drum.



If the holes on the bellow shown in the figure is blocked, open the holes using a toothpick.

	Foreign metal substances will cause rust stains in the drum. Clean the stains on the drum surface by using cleaning agents for stainless steel. Never use steel wool or wire wool.
	WARNING: Never use sponge or scrub materials. These will damage the painted and plastic surfaces.

4.7.3 Cleaning the body and control panel

Wipe the body of the machine with soapy water or non-corrosive mild gel detergents as necessary, and dry with a soft cloth.
Use only a soft and damp cloth to clean the control panel.

4.7.4 Cleaning the water intake filters

There is a filter at the end of each water intake valve at the rear of the machine and also at the end of each water intake hose where they are connected to the tap. These filters prevent foreign substances and dirt in the water to enter the washing machine. Filters should be cleaned as they do get dirty.

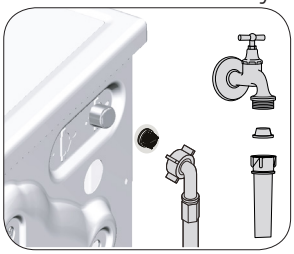

1. Close the taps.
2. Remove the nuts of the water intake hoses to access the filters on the water intake valves. Clean them with an appropriate brush. If the filters are too dirty, take them out by means of pliers and clean them.
3. Take out the filters on the flat ends of the water intake hoses together with the gaskets and clean thoroughly under running water.
4. Replace the gaskets and filters carefully in their places and tighten the hose nuts by hand.

4.7.5 Draining remaining water and cleaning the pump filter

The filter system in your machine prevents solid items such as buttons, coins and fabric fibers clogging the pump impeller during discharge of washing water. Thus, the water will be discharged without any problem and the service life of the pump will extend.
If the machine fails to drain water, the pump filter is clogged. Filter must be cleaned whenever it is clogged or in every 3 months. Water must be drained off first to clean the pump filter.
In addition, prior to transporting the machine (e.g., when moving to another house) and in case of freezing of the water, water may have to be drained completely.

WARNING: Foreign substances left in the pump filter may damage your machine or may cause noise problem.

In order to clean the dirty filter and discharge the water:
1. Unplug the machine to cut off the supply power.

WARNING: Temperature of the water inside the machine may rise up to 90 °C. To avoid burning risk, filter must be cleaned after the water in the machine cools down.

2. Some of our products have emergency draining hose and some does not have. Follow the steps below to discharge the water.

Discharging the water when the product has an emergency draining hose:

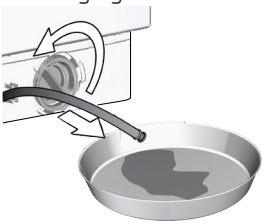

a. Pull the emergency draining hose out from its seat
b. Place a large container at the end of the hose. Drain the water into the container by pulling out the plug at the end of the hose. When the container is full, block the inlet of the hose by replacing the plug. After the container is emptied, repeat the above procedure to drain the water in the machine completely.
c. When draining of water is finished, close the end by the plug again and fix the hose in its place.
d. Turn the pump filter to take it out.
4. Clean any residues inside the filter as well as fibers, if any, around the pump impeller region.
5. Install the filter.
6. If the filter cap is composed of two pieces, close the filter cap by pressing on the tab. If it is one piece, seat the tabs in the lower part into their places first, and then press the upper part to close.

5 Troubleshooting

Problem	Reason	Solution
Programme does not start after closing the door.	Start / Pause / Cancel button was not pressed.	• *Press the Start / Pause / Cancel button.
	It may be difficult to close the loading door in case of excessive loading.	• Reduce the amount of laundry and make sure that the loading door is closed properly.
Programme cannot be started or selected.	Washing machine has switched to self protection mode due to a supply problem (line voltage, water pressure, etc.).	• To cancel the programme, turn the Programme Selection knob to select another programme. Previous programme will be cancelled. (See "Cancelling the programme")
Water in the machine.	Some water might have remained in the product due to the quality control processes in the production.	• This is not a failure; water is not harmful to the machine.
The machine enters standby mode after the programme starts or it does not take in water.	Tap is turned off.	• Turn on the taps.
	Water inlet hose is bent.	• Flatten the hose.
	Water inlet filter is clogged.	• Clean the filter.
	Loading door may be open.	• Close the door.
	The water connection may be wrong or water may be cut off (When the water is cut off, washing or rinsing LEDs flash).	• Check the water connection. If the water is cut off, press the Start/Pause key after the water has been supplied again to resume the operation from standby mode.
Machine does not drain water.	Water drain hose might be clogged or twisted.	• Clean or flatten the hose.
	Pump filter is clogged.	• Clean the pump filter.
Machine vibrates or makes noise.	Machine might be standing unbalanced.	• Adjust the feet to level the machine.
	A hard substance might have entered into the pump filter.	• Clean the pump filter.
	Transportation safety bolts are not removed.	• Remove the transportation safety bolts.
	Laundry quantity in the machine might be too little.	• Add more laundry to the machine.
	Machine might be overloaded with laundry.	• Take out some of the laundry from the machine or distribute the load by hand to balance it homogenously in the machine.
	Machine might be leaning on a rigid item.	• Make sure that the machine is not leaning on anything.
There is water leaking from the bottom of the washing machine.	Water drain hose might be clogged or twisted.	• Clean or flatten the hose.
	Pump filter is clogged.	• Clean the pump filter.
Machine stopped shortly after the programme started.	Machine might have stopped temporarily due to low voltage.	• It will resume running when the voltage restores to the normal level.
Machine directly discharges the water it takes in.	Draining hose might not be at adequate height.	• Connect the water draining hose as described in the operation manual.
No water can be seen in the machine during washing.	The water level is not visible from outside of the washing machine.	• This is not a failure.

Problem	Reason	Solution
Loading door cannot be opened.	Door lock is activated because of the water level in the machine.	• Drain the water by running the Pump or Spin programme.
	Machine is heating up the water or it is at the spinning cycle.	• Wait until the programme completes.
	Child lock is engaged. Door lock will be deactivated a couple of minutes after the programme has come to an end.	• Wait for a couple of minutes for deactivation of the door lock.
	Loading door may be stuck because of the pressure it is subjected to.	• Grab the handle and push and pull the loading door to release and open it.
Washing takes longer time than specified in the manual.(*)	Water pressure is low.	• Machine waits until taking in adequate amount of water to prevent poor washing quality due to the decreased amount of water. Therefore, the washing time extends.
	Voltage might be low.	• Washing time is prolonged to avoid poor washing results when the supply voltage is low.
	Input temperature of water might be low.	• Required time to heat up the water extends in cold seasons. Also, washing time can be lengthened to avoid poor washing results.
	Number of rinses and/or amount of rinse water might have increased.	• Machine increases the amount of rinse water when good rinsing is needed and adds an extra rinsing step if necessary.
	Excessive foam might have occurred and automatic foam absorption system might have been activated due to too much detergent usage.	• Use recommended amount of detergent.
Programme time does not countdown. (On models with display) (*)	Timer may stop during water intake.	• Timer indicator will not countdown until the machine takes in adequate amount of water. The machine will wait until there is sufficient amount of water to avoid poor washing results due to lack of water. Timer indicator will resume countdown after this.
	Timer may stop during heating step.	• Timer indicator will not countdown until the machine reaches the selected temperature.
	Timer may stop during spinning step.	• Automatic unbalanced load detection system might be activated due to the unbalanced distribution of the laundry in the drum.
Programme time does not countdown. (*)	There might be unbalanced load in the machine.	• Automatic unbalanced load detection system might be activated due to the unbalanced distribution of the laundry in the drum.
Machine does not switch to spinning step. (*)	There might be unbalanced load in the machine.	• Automatic unbalanced load detection system might be activated due to the unbalanced distribution of the laundry in the drum.
	The machine will not spin if water is not drained completely.	• Check the filter and the draining hose.
	Excessive foam might have occurred and automatic foam absorption system might have been activated due to too much detergent usage.	• Use recommended amount of detergent.

Problem	Reason	Solution
Washing performance is poor: Laundry turns grey. (**)	Insufficient amount of detergent has been used over a long period of time.	• Use the recommended amount of detergent appropriate for water hardness and the laundry.
	Washing was made at low temperatures for a long time.	• Select the proper temperature for the laundry to be washed.
	Insufficient amount of detergent is used with hard water.	• Using insufficient amount of detergent with hard water causes the soil to stick on the cloth and this turns the cloth into grey in time. It is difficult to eliminate graying once it happens. Use the recommended amount of detergent appropriate for water hardness and the laundry.
	Too much detergent is used.	• Use the recommended amount of detergent appropriate for water hardness and the laundry.
Washing performance is poor: Stains persist or the laundry is not whitened. (**)	Insufficient amount of detergent is used.	• Use the recommended amount of detergent appropriate for water hardness and the laundry.
	Excessive laundry was loaded in.	• Do not load the machine in excess. Load with amounts recommended in the "Programme and consumption table".
	Wrong programme and temperature were selected.	• Select the proper programme and temperature for the laundry to be washed.
	Wrong type of detergent is used.	• Use original detergent appropriate for the machine.
	Too much detergent is used.	• Put the detergent in the correct compartment. Do not mix the bleaching agent and the detergent with each other.
Washing performance is poor: Oily stains appeared on the laundry. (**)	Regular drum cleaning is not applied.	• Clean the drum regularly. For this, please see 4.7.2.
Washing performance is poor: Clothes smell unpleasantly. (**)	Odours and bacteria layers are formed on the drum as a result of continuous washing at lower temperatures and/or in short programmes.	• Leave the detergent drawer as well as the loading door of the machine ajar after each washing. Thus, a humid environment favorable for bacteria cannot occur in the machine.
Colour of the clothes faded. (**)	Excessive laundry was loaded in.	• Do not load the machine in excess.
	Detergent in use is damp.	• Keep detergents closed in an environment free of humidity and do not expose them to excessive temperatures.
	A higher temperature is selected.	• Select the proper programme and temperature according to the type and soiling degree of the laundry.

Problem	Reason	Solution
It does not rinse well.	The amount, brand and storage conditions of the detergent used are inappropriate.	• Use a detergent appropriate for the washing machine and your laundry. Keep detergents closed in an environment free of humidity and do not expose them to excessive temperatures.
	Detergent is put in the wrong compartment.	• If detergent is put in the prewash compartment although prewash cycle is not selected, machine can take this detergent during rinsing or softener step. Put the detergent in the correct compartment.
	Pump filter is clogged.	• Check the filter.
	Drain hose is folded.	• Check the drain hose.
Laundry became stiff after washing. (**)	Insufficient amount of detergent is used.	• Using insufficient amount of detergent for the water hardness can cause the laundry to become stiff in time. Use appropriate amount of detergent according to the water hardness.
	Detergent is put in the wrong compartment.	• If detergent is put in the prewash compartment although prewash cycle is not selected, machine can take this detergent during rinsing or softener step. Put the detergent in the correct compartment.
	Detergent might be mixed with the softener.	• Do not mix the softener with detergent. Wash and clean the dispenser with hot water.
Laundry does not smell like the softener. (**)	Detergent is put in the wrong compartment.	• If detergent is put in the prewash compartment although prewash cycle is not selected, machine can take this detergent during rinsing or softener step. Wash and clean the dispenser with hot water. Put the detergent in the correct compartment.
	Detergent might be mixed with the softener.	• Do not mix the softener with detergent. Wash and clean the dispenser with hot water.

Problem	Reason	Solution
Detergent residue in the detergent drawer. (**)	Detergent is put in wet drawer.	• Dry the detergent drawer before putting in detergent.
	Detergent has gotten damp.	• Keep detergents closed in an environment free of humidity and do not expose them to excessive temperatures.
	Water pressure is low.	• Check the water pressure.
	The detergent in the main wash compartment got wet while taking in the prewash water. Holes of the detergent compartment are blocked.	• Check the holes and clean if they are clogged.
	There is a problem with the detergent drawer valves.	• Call the Authorised Service Agent.
	Detergent might be mixed with the softener.	• Do not mix the softener with detergent. Wash and clean the dispenser with hot water.
	Regular drum cleaning is not applied.	• Clean the drum regularly. For this, please see 4.7.2.
Too much foam forms in the machine. (**)	Improper detergents for the washing machine are being used.	• Use detergents appropriate for the washing machine.
	Excessive amount of detergent is used.	• Use only sufficient amount of detergent.
	Detergent was stored under improper conditions.	• Store detergent in a closed and dry location. Do not store in excessively hot places.
	Some meshed laundry such as tulle may foam too much because of their texture.	• Use smaller amounts of detergent for this type of item.
	Detergent is put in the wrong compartment.	• Put the detergent in the correct compartment.
	Softener is being taken early.	• There may be problem in the valves or in the detergent dispenser. Call the Authorised Service Agent.
Foam is overflowing from the detergent drawer.	Too much detergent is used.	• Mix 1 tablespoonful softener and ½ l water and pour into the main wash compartment of the detergent drawer.
		• Put detergent into the machine suitable for the programmes and maximum loads indicated in the "Programme and consumption table". When you use additional chemicals (stain removers, bleachs and etc), reduce the amount of detergent.
Laundry remains wet at the end of the programme. (*)	Excessive foam might have occurred and automatic foam absorption system might have been activated due to too much detergent usage.	• Use recommended amount of detergent.

(*) Machine does not switch to spinning step when the laundry is not evenly distributed in the drum to prevent any damage to the machine and to its surrounding environment. Laundry should be rearranged and re-spun.

(**) Regular drum cleaning is not applied. Clean the drum regularly. See 4.7.2



CAUTION: If you cannot eliminate the problem although you follow the instructions in this section, consult your dealer or the Authorised Service Agent. Never try to repair a nonfunctional product yourself.

5 BUILT-IN INSTALLATION

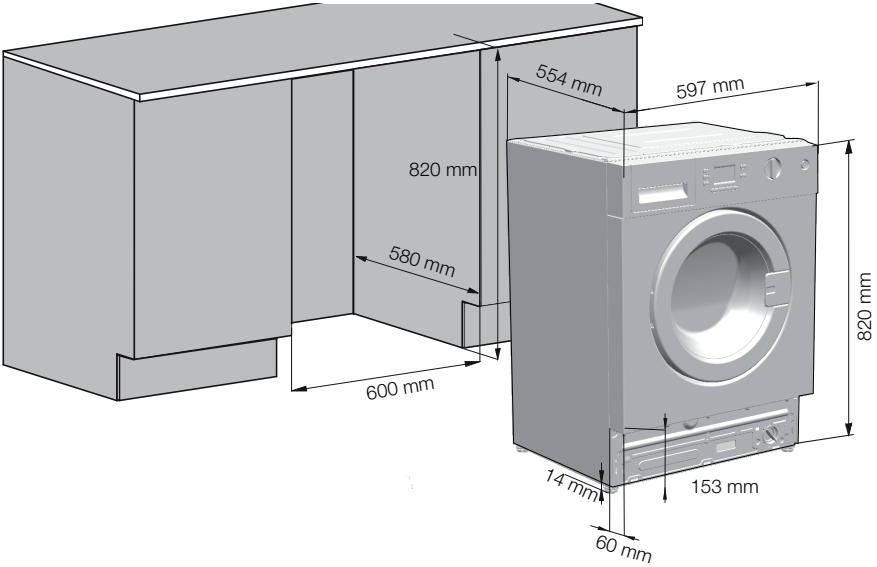

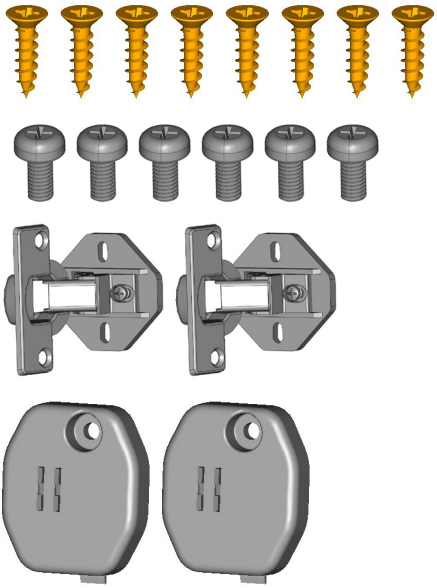

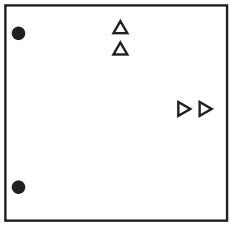

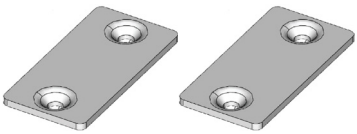

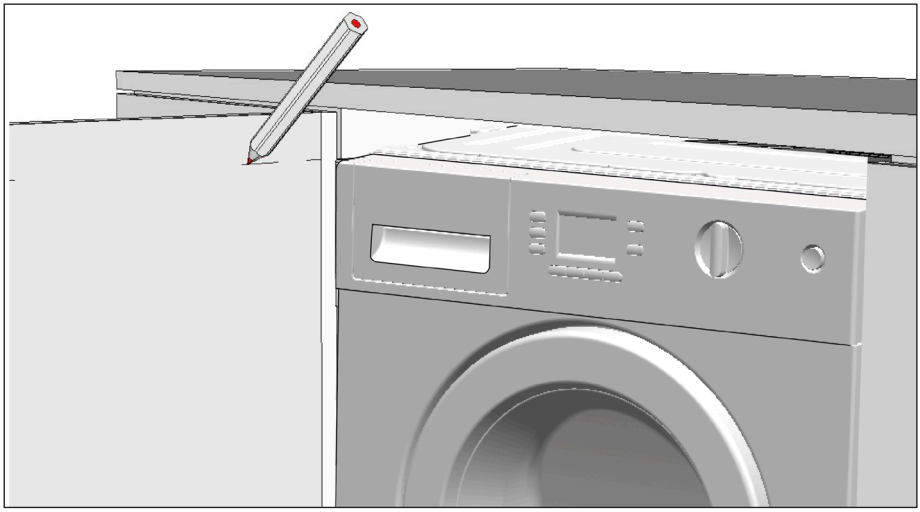

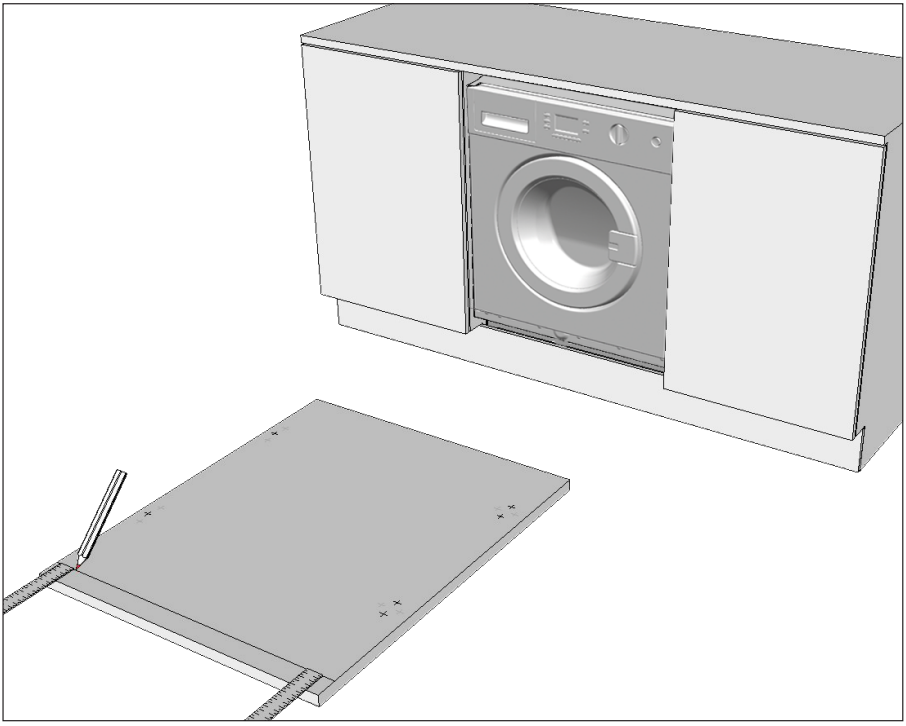

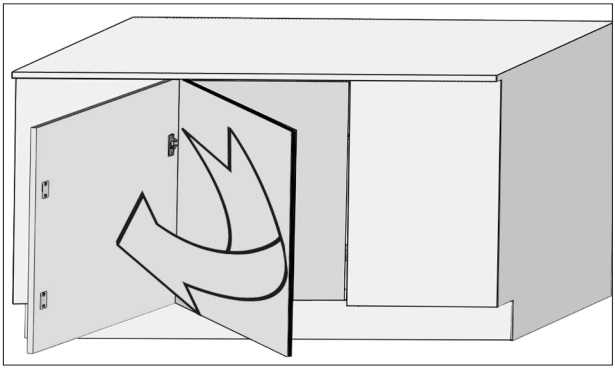

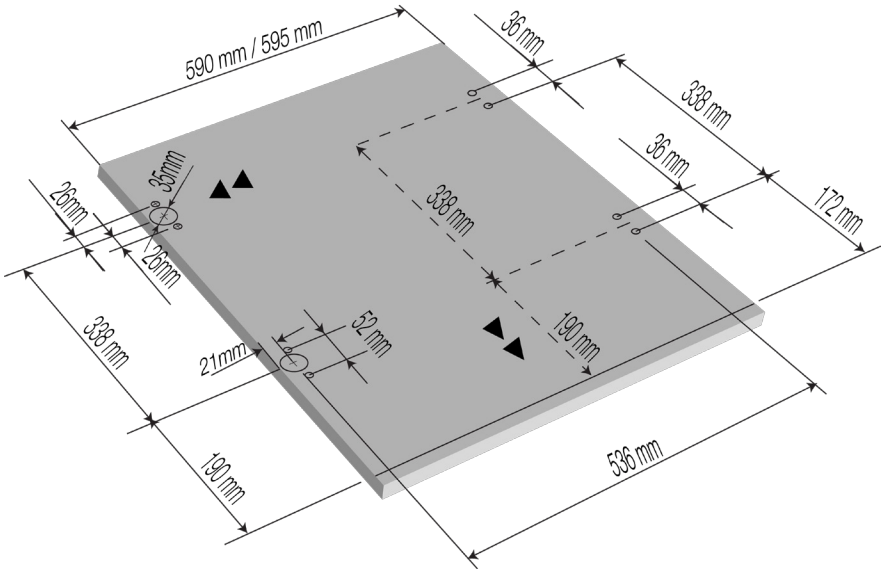
590 mm / 595 mm
36mm
338 mm
36mm
172 mm
35mm
28mm
26mm
338 mm
52 mm
21mm
190 mm
190 mm
596 mm

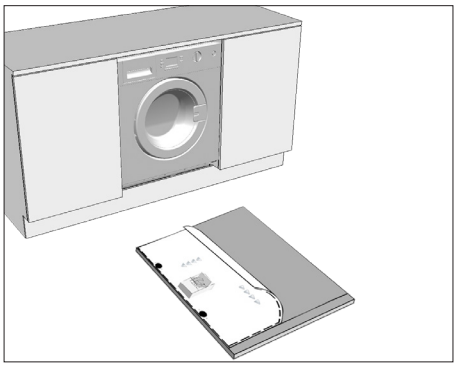

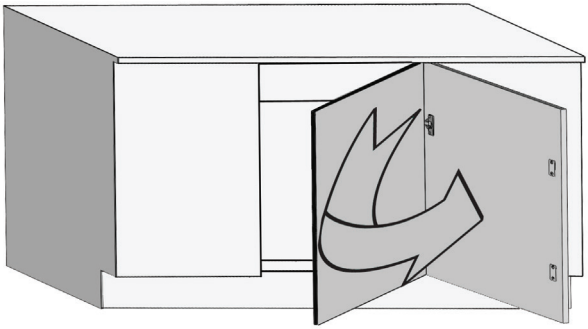

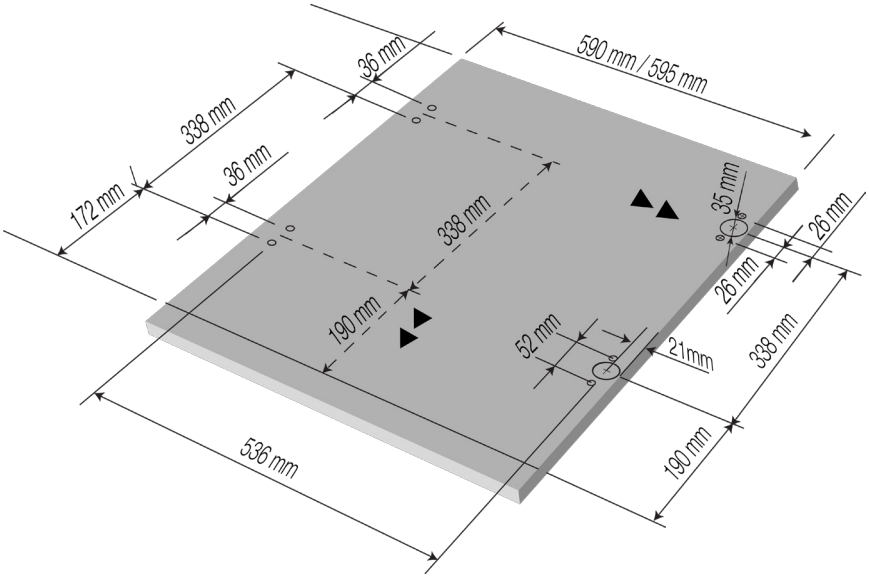
590 mm / 595 mm
36 mm
338 mm
36 mm
172 mm
338 mm
35 mm
26 mm
26 mm
190 mm
52 mm
21mm
338 mm
536 mm
190 mm

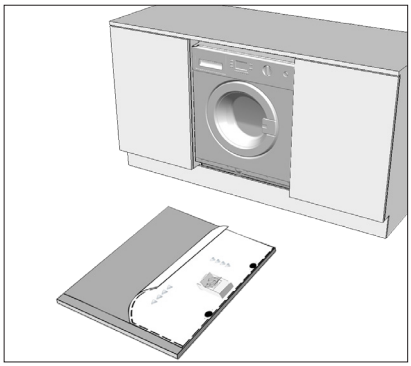

IF THE CABINET DOOR OPENS TO RIGHT

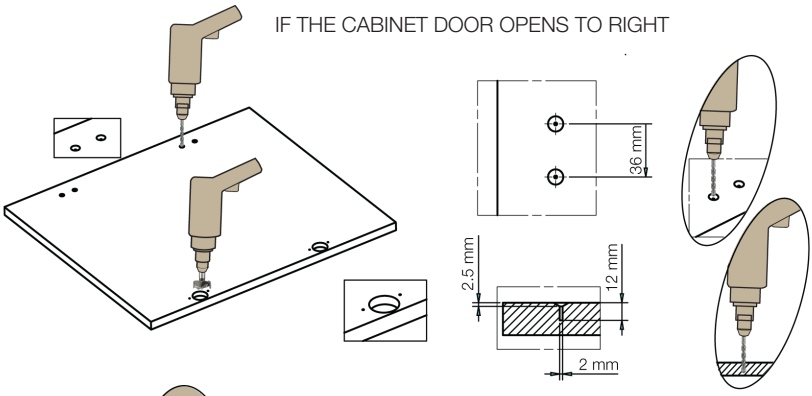

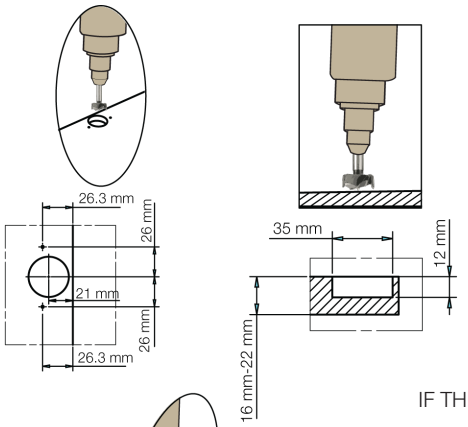

IF THE CABINET DOOR OPENS TO LEFT

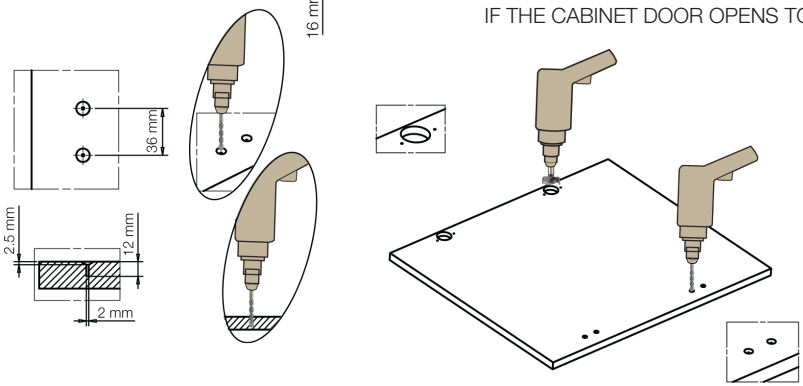

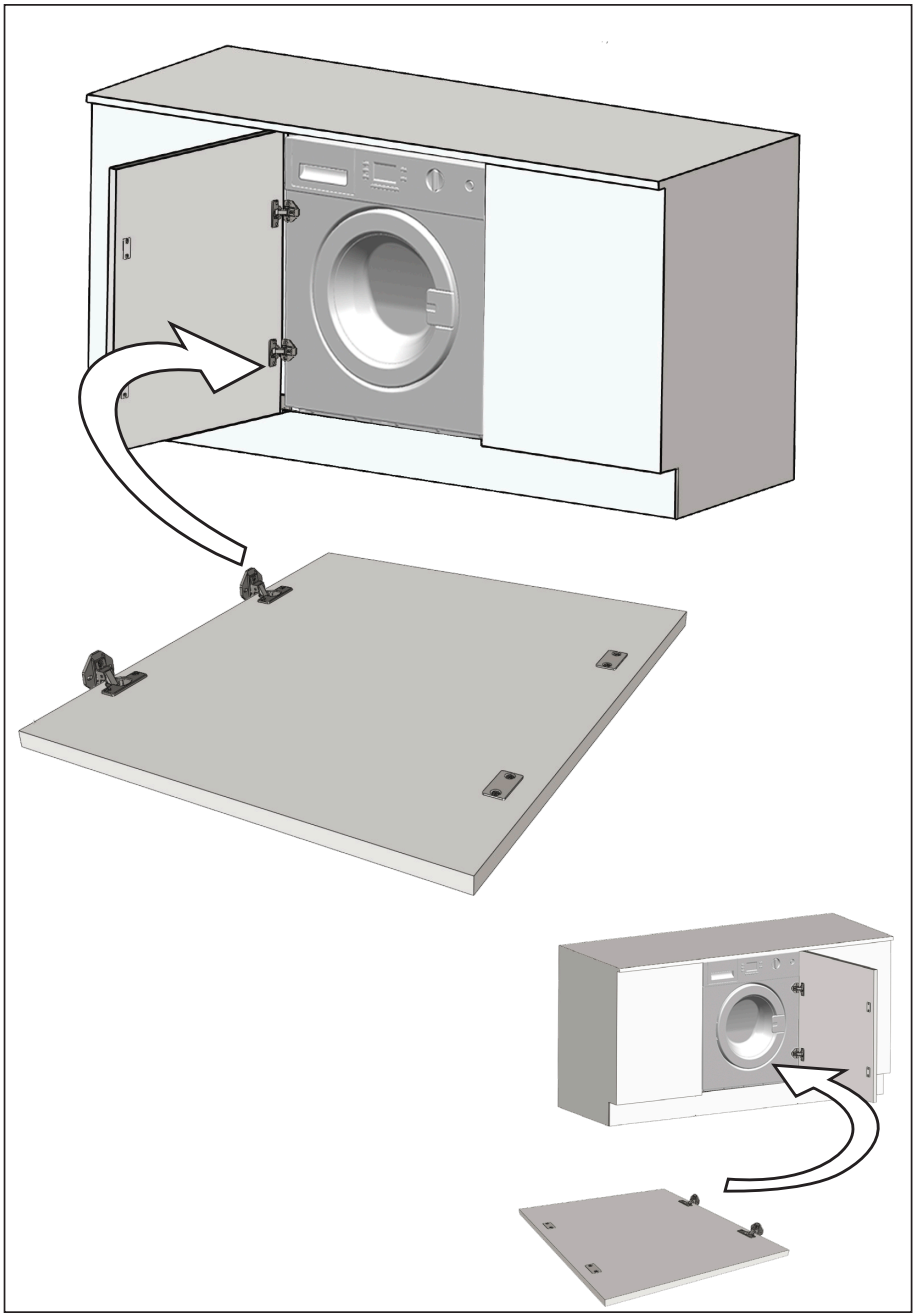

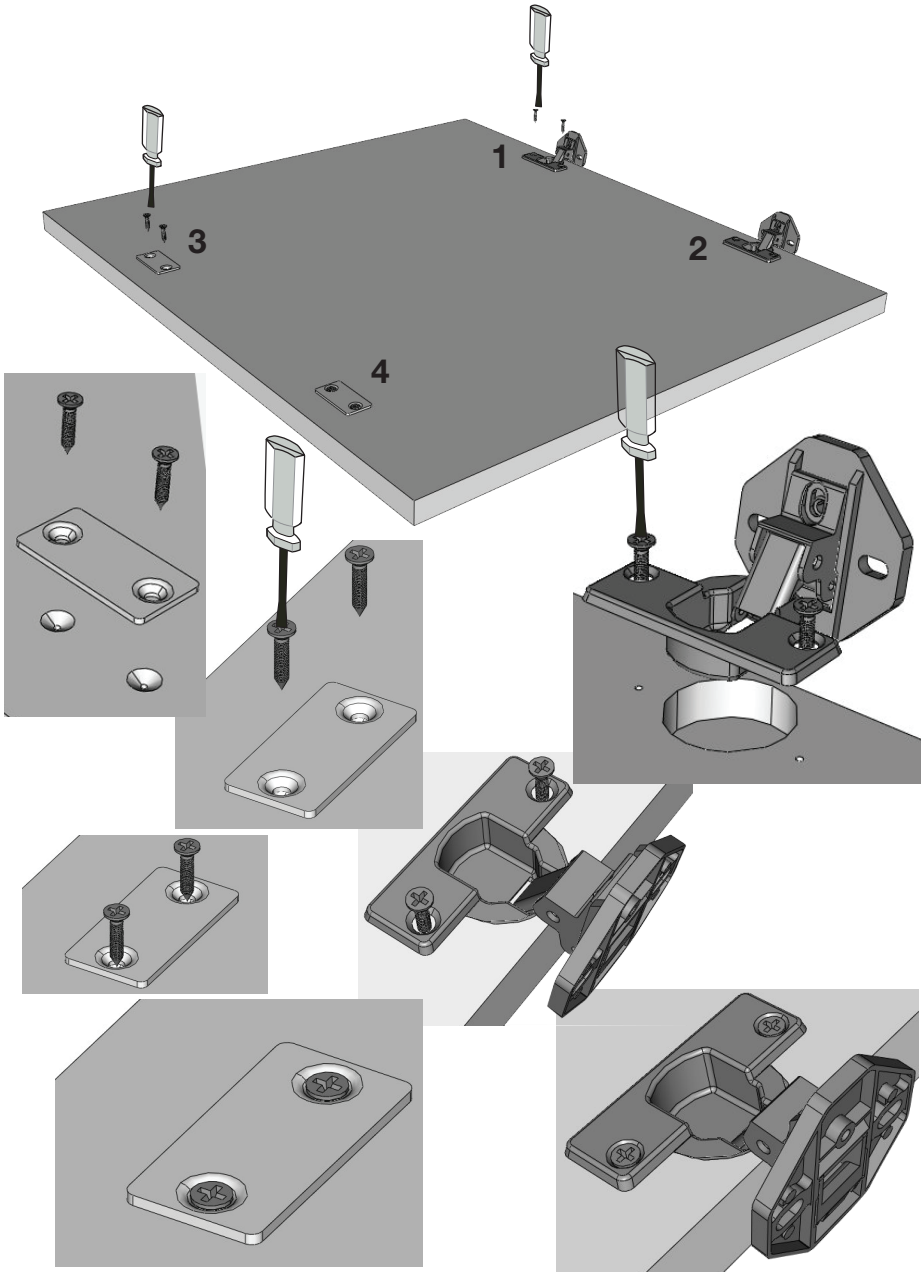
1
2
3
4



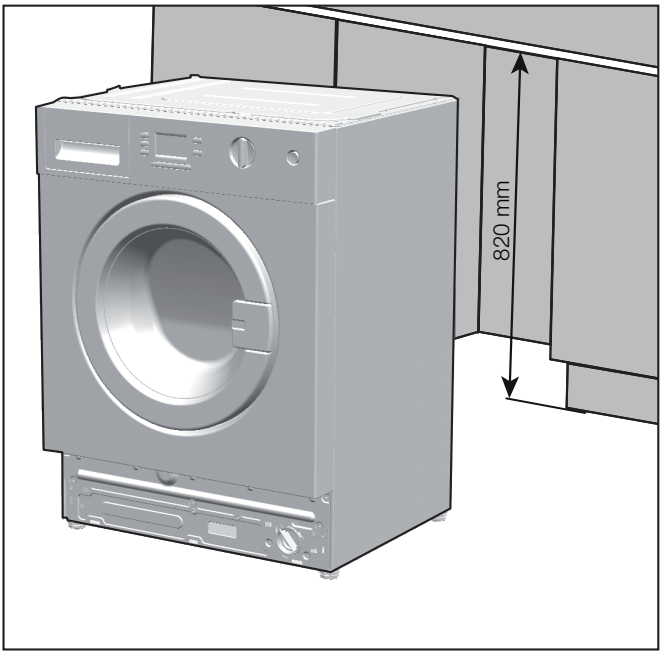
820 mm

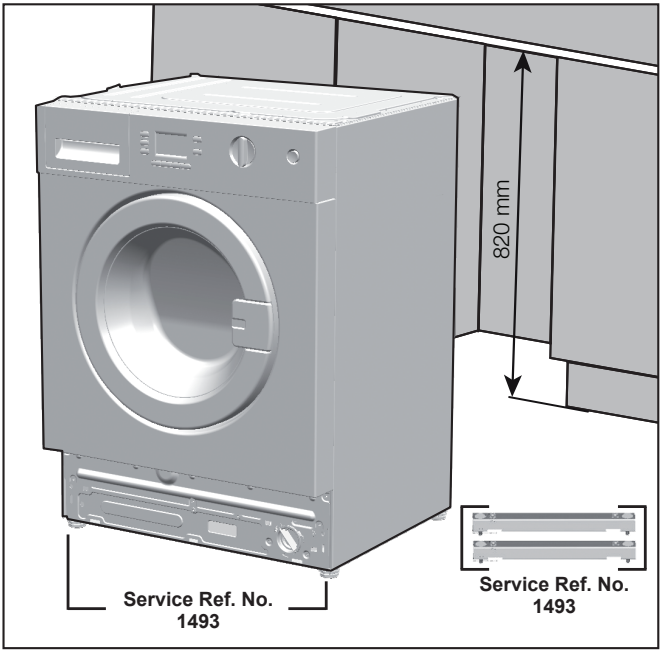
820 mm
Service Ref. No.
1493
Service Ref. No.
1493

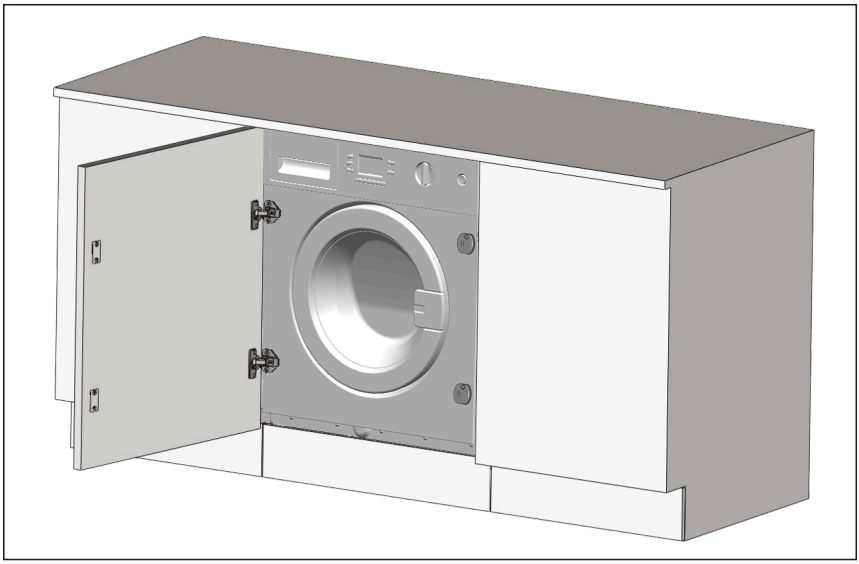

Service

Please keep your purchase receipt or other proof of purchase in a safe place; you will need to have it should the product require attention under guarantee.
You should also complete the details below; it will help us assist you when requesting service. (The model number is printed on the Instruction Booklet and the serial number is printed on the Rating Label affixed to the appliance)

Model No:
Serial No:
Retailer:
Date of purchase:

For service under guarantee simply telephone the appropriate number below

UK Mainland & Northern Ireland

Fridges & Freezers	0345 600 4903 or 0845 600 4903
Electric Cookers	0345 600 4902 or 0845 600 4902
Gas & Dual Fuel Cookers	0345 600 4905 or 0845 600 4905

Washing Machines & Tumble Dryers
0345 600 4906 or 0845 600 4906

Republic of Ireland

All Refrigeration, 01 862 3411
All Cookers
Washing Machines & Dishwashers
Before requesting service please check the trouble-shooting guide in the Operating Instructions as a charge may be levied where no fault is found even though your product may still be under guarantee.

Service once the manufacturers guarantee has expired.

If you have purchased an extended guarantee please refer to the instructions contained within the extended guarantee agreement document. Otherwise please call the appropriate number above where service can be obtained at a charge.
Should you experience any difficulty in obtaining service please contact the Beko Customer Help-Line.
Tel: 0845 600 4911
e-mail:service@beko.co.uk

Guarantee

Washing Machine

Your new Beko product is guaranteed against the cost of breakdown repairs for twelve months from the date of the original purchase.

What is covered?

- Repairs necessary as a result of faulty materials, defective components or manufacturing defect.
- The cost of functional replacement parts, but excluding consumable items.
- The labour costs of a Beko approved repairer to carry out the repair.

What is not covered?

- Transit, delivery or accidental damage or misuse and abuse.
- Cabinet or appearance parts, including knobs, flaps, handles or container lids.
- Accessories or consumable items including but not limited to, ice trays, scrapers, cutlery baskets, filters and light bulbs.
- Repairs required as a result of unauthorised repair or inexpert installation that fails to meet the requirements contained in the user instruction book.
- Repairs to products used on commercial or non-residential household premises.
- Loss of frozen food in freezers or fridge/freezers. (Food loss insurance is often included within your household contents insurance policy, or may be available separately from your retailer).

Important notes.

- Your Beko product is designed and built for domestic household use only.
- The guarantee will be void if the product is installed or used in commercial or non-residential domestic household premises.
- The product must be correctly installed, located and operated in accordance with the instructions contained in the User Instructions Booklet provided.
- Professional installation by a qualified Electrical Domestic Appliance Installer is recommended for all Washing Machines, Dishwashers and Electric Cookers
- Gas Cookers must only be installed by a Gas Safe (or BORD GAIS) registered Gas Installer.
- The guarantee is given only within the boundaries of the United Kingdom and the Republic of Ireland.
- The guarantee is applicable only to new products and is not transferable if the product is resold.
- Beko disclaims any liability for incidental or consequential damages.
- The guarantee does not in anyway diminish your statutory or legal rights.

Should you experience any difficulty in obtaining service please contact the Beko Customer Help-Line.
Tel: 0845 600 4911
e-mail:service@beko.co.uk

www.beko.com