Refrigerator

Instruction of use

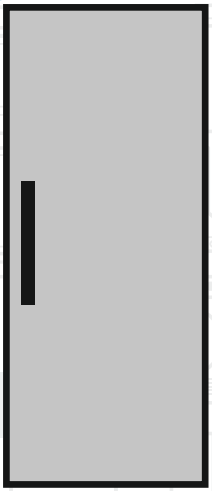

LSP1577W

EN

beko

Please read these instructions first before using your appliance

Thank you for choosing a Beko appliance.
Please take some time to read this user manual before using your appliance, to ensure you know how to safely operate the controls and functions.
Carefully follow all unpacking and installation instructions to ensure the appliance is correctly connected and fitted prior to use.
Please write your product model and serial number on the last page of this user manual, and store in a safe location close to the appliance for easy future reference.
This user manual may also be applicable for several other models. Differences between models will be listed.
If you have any questions or concerns, please call our contact centre or find help and information online at www.beko.co.uk.

Explanation of symbols used throughout this User Manual

 - The terminal in the plug is marked with the symbol.

 - Important information or useful usage tips.

 - Symbol for waste electrical and electronic equipment.

CONTENTS

1 Your refrigerator 4

2 Warnings 5

Electrical requirements....6
Warning! This appliance must be earthed....6
Energy saving tips 7
Compliance with WEEE Directive and Disposing of the Waste Product: 7
Compliance with RoHS directive: 7
Package information....7

3 Installation 8

Disposing of the packaging 8
Disposing of your old refrigerator 8
Placing and Installation 8
Transportation instructions....8
Replacing the interior light bulb....9
Installation instructions....9
Reversing the door 10

4 Before operating 11

Final Check 11

5 Using your refrigerator 12

Setting the operating temperature 12
Defrosting.... 12
Suggested arrangement of food in the appliance....13

6 Maintenance and cleaning 14

7 Do's and Don'ts 15

Problem solving 15

Standard guarantee terms and conditions....16

Built-in appliances guarantee terms and conditions....17

How to obtain service....18

1 Your refrigerator

Congratulations on your choice of a **Beko** quality Appliance which has been designed to give you service for many years.

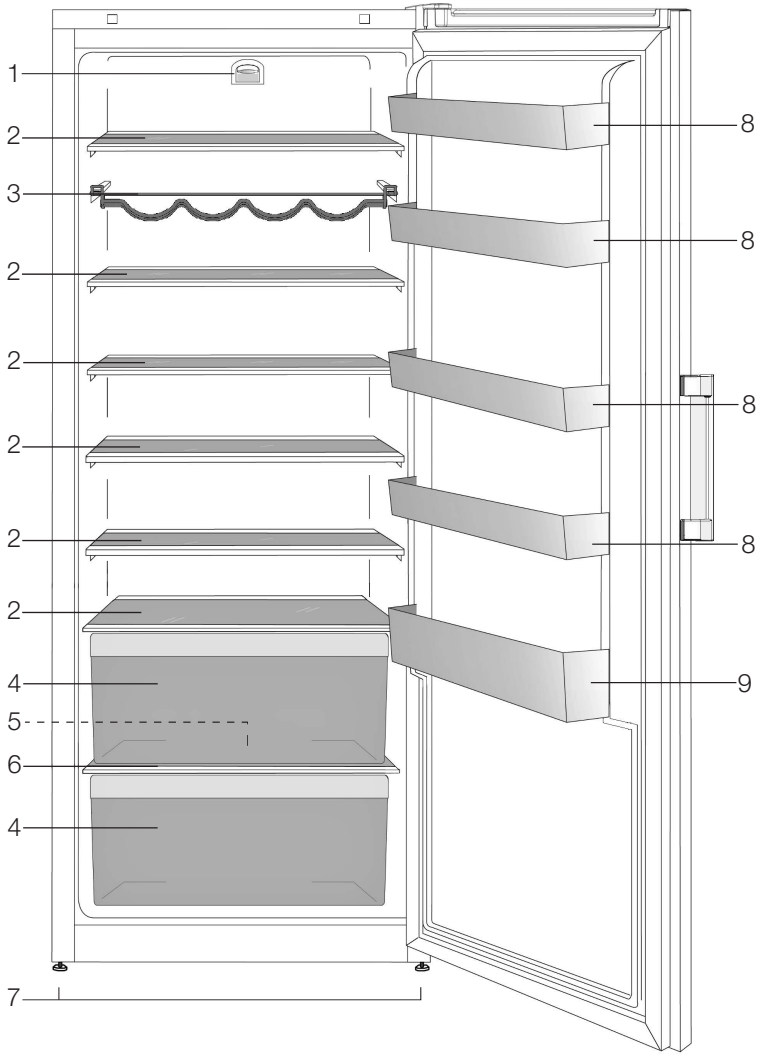

1. Thermostat control and interior light
2. Movable shelves
3. Wine rack
4. Vegetable drawers
5. Defrost water collection channel - drain tube
6. Crisper cover
7. Front feet
8. Adjustable door shelves
9. Bottle shelf

Gjhvsft uibu ublf qmbdf jo uijt jotusvdujpo nbovbm bsf tdif nbujd boe nbz opu dpssftqpoe fybdumz xjui zpvs qspevdu/ Jg uif tvclfdu qbsut bsf opu jodmvefe jo uif qspevdu zpv ibwf qvsdibtfe, uifo ju jt wbmje gps puifs npefmt/

2 Warnings

- Do not connect your appliance to the electricity supply until all packing and transit protectors have been removed.
- If transported horizontally leave to stand upright for at least **4** hours before switching on to allow compressor oil to settle.
- If you are discarding an old refrigerator with a lock or latch fitted to the door, disable the lock/latch, ensure that it is left in a safe condition to prevent the entrapment of young children.
- This fridge must only be used for its intended purpose i.e. the storing and cooling of edible foodstuff.
- Do not dispose of the appliance on a fire. At **Beko**, the care and protection of our environment is an ongoing commitment. This appliance which is among the latest range introduced is particularly environment friendly. Your appliance contains non CFC / HFC natural substances in the cooling system (called R600a) and in the insulation (called cyclopentane) which are potentially flammable if exposed to fire. Therefore, take care not to damage, the cooling circuit / pipes of the appliance in transportation and in use. In case of damage do not expose the appliance to fire or potential ignition source and immediately ventilate the room where the appliance is situated.
- We suggest you contact your local authority for disposal information and facilities available.
- See 'Installation instructions' on page **9** for information on suitable location.
- To obtain the best possible performance and trouble free operation from your appliance it is very important to carefully read these instructions.
- On delivery, check to make sure that the product is not damaged and that all the parts and accessories are in perfect condition.
- Ensure that the plug remains readily accessible. Do not use multiple adapter or extension cable.
- Failure to observe these instructions may invalidate your right to free service during the guarantee period.
- Keep ventilation openings, in the appliance enclosure or in the built-in structure, clear of obstruction.
- Do not use mechanical devices or other means to accelerate the defrosting process, other than those recommended by the manufacturer.
- Do not damage the refrigerant circuit.
- Do not use electrical appliances inside the food storage compartments of the appliance, unless they are of the type recommended by the manufacturer.
- We suggest you keep these instructions in a safe place for easy reference.
- This appliance can be used by children aged from 8 years and above and persons with reduced physical, sensory or mental capabilities or lack of experience and knowledge if they have been given supervision or instruction concerning use of the appliance in a safe way and understand the hazards involved. Children shall not play with the appliance. Cleaning and user maintenance shall not be made by children without supervision.
- Children should be supervised to ensure that they do not play with the appliance.

Electrical requirements

Before you insert the plug into the wall socket make sure that the voltage and the frequency shown on the rating plate inside the appliance corresponds to your electricity supply.
Rating label is on the left hand side of fridge inner liner.
We recommend that this appliance be connected to the mains supply via a suitable switched and fused socket.
The appliance must be positioned so that the plug is accessible. **WARNING:** When positioning the appliance ensure the supply cord is not trapped or damaged.
Should the mains lead of the appliance become damaged or should it need replacing at any time, it must be replaced by a special purpose made mains lead which can only be obtained from a **Beko** authorised service agent.

Warning! This appliance must be earthed

If the fitted moulded plug is not suitable for your socket, then the plug should be cut off and an appropriate plug fitted. Destroy the old plug which is cut off as a plug with bared cord could cause a shock hazard if inserted into a socket elsewhere in the house.
The moulded plug on this appliance incorporates a 13 A fuse. Should the fuse need to be replaced an ASTABEAB approved BS 1362 fuse of the same rating must be used. Do not forget to refit the fuse cover. In the event of losing the fuse cover the plug must not be used until a replacement fuse cover has been fitted.
Colour of the replacement fuse cover must be the same colour as that visible on the pin face of the plug.
Fuse covers are available from any good electrical store.

Important! Fitting A Different Plug

As the colours of the wires in the mains lead of this appliance may not correspond with the coloured markings identifying the terminals in your plug proceed as follows: (see diagram).

1. Connect the green-yellow or green (Earth) wire to the terminal in the plug marked ‘E’ or with the symbol ⏚ or coloured green and yellow or green.
2. Connect the blue (Neutral) wire to the terminal in the plug marked ‘N’ or coloured black.
3. Connect the brown (Live) wire to the terminal in the plug marked ‘L’ or coloured red.

With alternative plugs a 13 A fuse must be fitted either in the plug or adaptor or in the main fuse box. If in doubt contact a qualified electrician

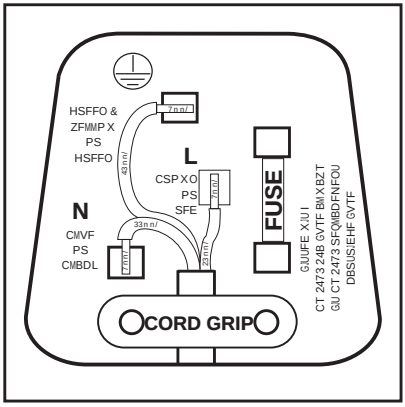

Energy saving tips

1. Ensure your appliance is installed in a well ventilated area.
2. Ensure the time between buying chilled/frozen food and placing them in your appliance is kept at minimum, particularly in summer. We recommend you use a cool bag or a special carrier bag to carry perishable food.
3. Do not leave the door of your appliance open longer than necessary and ensure they are closed properly after each opening.
4. Defrost frozen food in the fridge, so that frozen food acts as an ice pack to assist cooling in the fridge.

Compliance with WEEE Directive and Disposing of the Waste Product:

This product complies with EU WEEE Directive (2012/19/EU). This product bears a classification symbol for waste electrical and electronic equipment (WEEE). This product has been manufactured with high quality parts and materials which can be reused and are suitable for recycling. Do not dispose of the waste product with normal domestic and other wastes at the end of its service life. Take it to the collection center for the recycling of electrical and electronic equipment. Please consult your local authorities to learn about these collection centers.

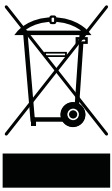

Compliance with RoHS directive:

The product you have purchased complies with EU RoHS Directive (2011/65/EU). It does not contain harmful and prohibited materials specified in the Directive.

Package information

Packaging materials of the product are manufactured from recyclable materials in accordance with our National Environment Regulations. Do not dispose of the packaging materials together with the domestic or other wastes. Take them to the packaging material collection points designated by the local authorities.

3 Installation

Disposing of the packaging

The packing materials may be dangerous for children. Keep the packing materials out of the reach of children or dispose of them by classifying them in accordance with the waste instructions. Do not dispose of them along with the normal household waste.
The packing of your refrigerator is produced from recyclable materials.

Disposing of your old refrigerator

Dispose of your old refrigerator without giving any harm to the environment.
• You may consult your authorised dealer or waste collection center of your municipality about the disposal of your refrigerator.
Before disposing of your refrigerator, cut off the electric plug and, if there are any locks on the door, make them inoperable in order to protect children against any danger.

Placing and Installation

1. Install your refrigerator to a place that allows ease of use.
2. Keep your refrigerator away from heat sources, humid places and direct sunlight.
3. There must be appropriate air ventilation around your refrigerator in order to achieve an efficient operation.
4. Place your refrigerator on an even floor surface to prevent jolts.
5. Do not keep your refrigerator in ambient temperatures under 10°C.

WARNING: Do not locate extension sockets or charging transformers/ power supplies or Lithium-Iron battery operated products adjacent to the compressor as they could overheat.

Transportation instructions

1. The appliance should be transported only in a vertical upright position. The packing as supplied must be intact during transportation.
2. If during the course of transport the appliance has to be transported horizontally, it must only be laid on its right hand side when standing in the front of the appliance. After bringing it to upright position, it must not be operated for at least **4** hours to allow the system to settle.
3. Failure to comply with the above instructions could result in damage occurring to the appliance. The manufacturer will not be held responsible if these instructions are disregarded.
4. The appliance must be protected against rain, moisture and other atmospheric influences.
5. When positioning your appliance take care not to damage your flooring, pipes, wall coverings etc. Do not move the appliance by pulling by the door or handle.
6. Empty any water in the drain tray before moving. See section 'Defrosting' and 'Maintenance and cleaning' for further information.
7. Make sure that the defrost water pipe at the back of the product is fixed to the plastic evaporating pan on the top of the compressor, to avoid defrost water spillage on the floor.

IMPORTANT: Care must be taken while cleaning / carrying the appliance to avoid touching the bottom of the condenser metal wires at the back of the appliance as you might injure your fingers and hands.
Do not attempt to sit or stand on top of your appliance as it is not designed for such use. You could injure yourself or damage the appliance.

"**IMPORTANT:** Make sure that mains cable is not caught under the appliance during and after carrying / moving the appliance, to avoid the mains cable becoming cut or damaged."
Do not allow children to play with the appliance or tamper with the controls. **Beko** declines to accept any liability should the instructions not be followed.

Replacing the interior light bulb

To change the Bulb/LED used for illumination of your refrigerator, call your Authorised Service. The lamp(s) used in this appliance is not suitable for household room illumination. The intended purpose of this lamp is to assist the user to place foodstuffs in the refrigerator in a safe and comfortable way. The lamps used in this appliance have to withstand extreme physical conditions such as temperatures below -20°C (only chest and upright freezer).

Installation instructions

1. The space in the room where the appliance is installed must not be smaller than 10 cubic metres.

ⓘ If the ambient temperature is below 0°C, the food in the fridge will freeze. So, we recommend you don't use the appliance in such low ambient conditions.

2. Do not place the appliance near cookers, radiators or in direct sunlight as this will cause your appliance to work harder. If installed next to a source of heat or freezer, maintain the following minimum side clearances:

From Cookers	50 mm (2")
From Radiators	300 mm (12")
From Freezers	25 mm (1")

3. Refer to "Maintenance and cleaning" section to prepare your appliance for use.

4. Attach 2 plastic wedges as illustrated below. Plastic wedges are intended to keep the distance which will ensure the air circulation between your refrigerator and the wall. (The picture is drawn up as a representation and it is not identical with your product).

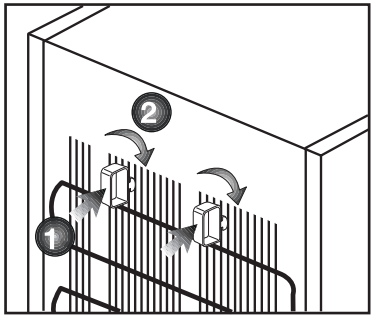

5. A special receptacle is supplied to store the mains plug during transit. The receptacle is fixed at the back of the cabinet, on the side of the compressor (see diagram). Gently remove the plug from the receptacle. Never pull the mains cord, you may damage the appliance. In the case of transportation, ensure you locate the plug in the receptacle provided to avoid transit damage.

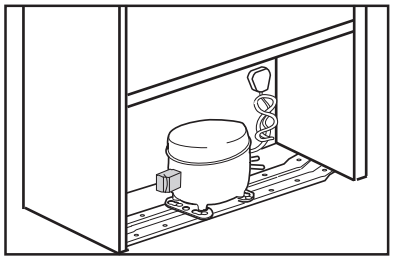

6. The appliance should be located on a smooth surface. The two front feet can be adjusted as required. To ensure that, your appliance is standing upright adjust the two front feet by turning clockwise or anti-clockwise, until the product is in firm contact with the floor. Correct adjustment of feet avoids excessive vibration and noise.

Reversing the door

Proceed in numerical order.

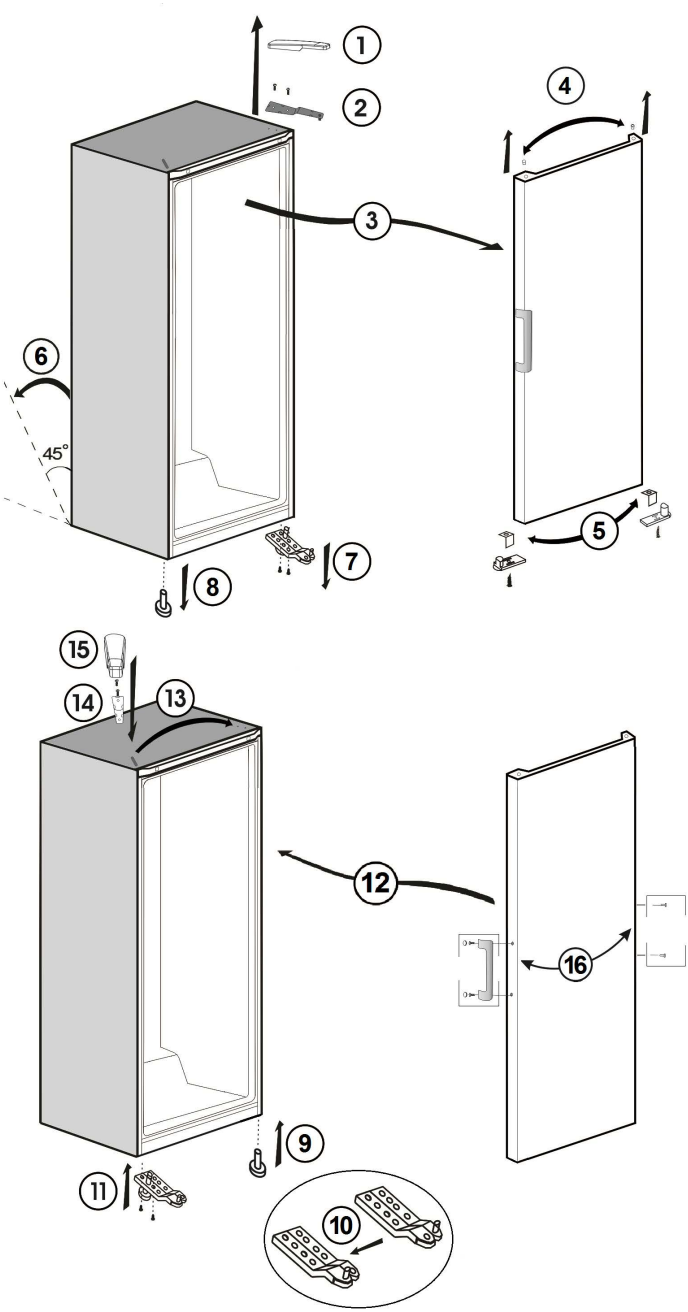

1. Remove the plastic cover of the top hinge.
2. Unscrew the bolts and remove the top hinge while holding the door.
3. Remove door carefully off the bottom hinge and stand door upright a safe place.
4. Reposition the hinge bushing and the tap on the door.
5. Unscrew and reposition the hinge bushing from door.
6. Carefully tilt the appliance on its back. You may need somebody to help you.
7. Take off lower hinge.
8. Unscrew the screw level.
9. Screw the screw level.
10. Reposition the lower hinge pin.
11. Take on lower hinge.
12. Locate the door to the bottom hinge and attach to the cabinet.
13. Remove and reposition the plastic cover on top of the cabinet.
14. Locate the top hinge on the door, fit on top of the cabinet and screw the bolts.
15. Fit the plastic cover of the top hinge.
16. Unscrew and reposition the handle from the door.

4 Before operating

Final Check

Before you start using the appliance check that:

1. The feet have been adjusted for perfect levelling.

2. The interior is dry and air can circulate freely at the rear of the cabinet.

3. Clean the interior as recommended under “Maintenance and cleaning”.

4. Insert the plug into the wall socket and switch on the electricity supply.

• When the door is open the fridge interior light will come on.

5. You will hear a noise as the compressor starts up. The liquid and gases sealed within the refrigeration system may also give rise to noise, whether the compressor is running or not which is quite normal.

6. Front edges of the cabinet may feel warm. This is normal. These areas are designed to be warm to avoid condensation.

7. “Do not load the appliance immediately it is switched on. Wait until the correct storage temperature has been reached. We recommend that you check the temperature with an accurate thermometer.

5 Using your refrigerator

Setting the operating temperature

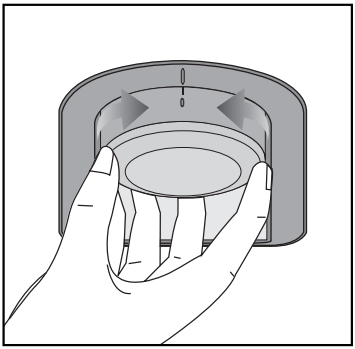

The operating temperature is regulated by the temperature control.

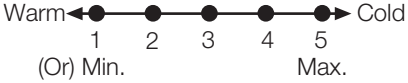

1 = Lowest cooling setting (Warmest setting)
5 = Highest cooling setting (Coldest setting)
(Or)
Min. = Lowest cooling setting
(Warmest setting)
Max. = Highest cooling setting
(Coldest setting)

The average temperature inside the fridge should be around +5°C.

Please choose the setting according to the desired temperature.

Please note that there will be different temperatures in the cooling area. The coldest region is immediately above the vegetable compartment.

The interior temperature also depends on ambient temperature, the frequency with which the door is opened and the amount of foods kept inside.

Frequently opening the door causes the interior temperature to rise. For this reason, it is recommended to close the door again as soon as possible after use.

Defrosting

The appliance defrosts automatically.
The defrosting water runs to the drain tube via a collection container at the back of the appliance (1) (see diagram). During defrosting water droplets may form at the back of the fridge where concealed evaporator is located. Some droplets may remain on the liner and refreeze when defrosting is completed. Do not use pointed or sharp edged objects such as knives, forks to remove the droplets which have frozen. If at any time the defrost water does not drain from the collection channel, check to ensure that no food particles have blocked the drain tube. The drain tube can be cleared by pushing the special plastic plunger provided down the drain tube (2).

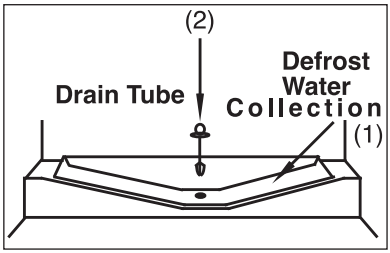

Suggested arrangement of food in the appliance

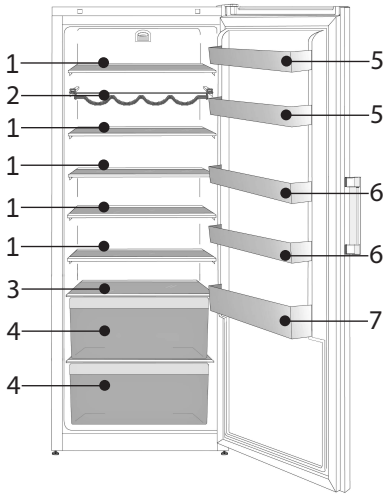

Arrangement examples (see diagram)
1. Baked, chilled cooked food, dairy products, cans.
2. Wine bottles
3. Meat, sausages, cold cuts, cans.
4. Fruit, vegetables, salads.
5. Butter, cheese, eggs.
6. Small bottles, cans, tubes.
7. Tall, large bottles, beverages.

The following guidelines and recommendations are suggested to obtain the best results and storage hygiene.
1. Appliance is for the short term storage of fresh food and drinks.
2. Cooked dishes must be stored in airtight covered containers.
3. Fresh wrapped produce can be placed on the shelf. Fresh fruit and vegetables should be cleaned and stored in the crisper bins.
4. Bottles can be placed in the door section.
5. To store raw meat, wrap in polythene bags and place on the lowest shelf. Do not allow to come into contact with cooked food to avoid contamination. For safety, only store raw meat for two to three days.
6. Keep the food packed wrapped or covered. Allow hot food and beverages to cool before placing them in the fridge. Do not store explosive substances. High proof alcohol must be stored upright in sealed containers. Left over canned food should not be stored in the can.
7. Some fruit and vegetables suffer damage if kept at temperatures near 0°C. Therefore wrap pineapples, melons, cucumbers, tomatoes and similar produce in polythene bags.
8. Place chilled cooked food and similar food near the rear of the fridge inner liner where the cold wall is located.
9. Shelves, racks, crisper bins, drawers, flaps, bottle grippers are all removable.
10. Do not leave frozen food at room temperature to thaw; the best way to defrost food is to put it in the fridge to thaw slowly. Make sure you avoid defrosting food or food juices drip onto other food.
11. For hygiene reasons, always wrap food using a suitable packaging material before storing in your appliance to avoid contact with the appliance surface.

Warnings!
Never store products that contain inflammable propellant gas (e.g. dispensers, spray cans etc.) or explosive substances.
Don't cover the shelves with any protective materials, which may obstruct air circulation.
Do not allow children to play with the appliance or tamper with the controls.

Warning:
Do not use any copper pot, dish inside the cabinet!
Do not load any food without package!

6 Maintenance and cleaning

** We recommend that you switch off the appliance at the socket outlet and pull out the mains plug before cleaning.

** Never use any sharp abrasive instrument, soap, household cleaner, detergent and wax polish for cleaning.

** Use lukewarm water to clean the cabinet of the appliance and wipe it dry.

** Use a damp cloth wrung out in a solution of one teaspoon of bicarbonate of soda to one pint of water to clean the interior and wipe it dry.

** Make sure that no water enters the lamp housing.

** If the appliance is not going to be used for a long period of time switch it off, remove all food, clean it and leave the door ajar.

** Any dust that gathers on the condenser, which is located at the back of the appliance, should be removed once a year with a vacuum cleaner.

** Check door seals regularly to ensure they are clean and free from food particles.

** Removal of door tray.

• To remove door racks, remove all the contents and then simply push the door rack upwards from the base.

** Make sure that the special plastic container (drain tray) at the back of the appliance which collects defrost water is clean at all times. If you want to remove the tray to clean it follow the instructions below:

• Switch off at the socket outlet and pull out the mains plug.
• Push the lug down with the tip of a screw driver & pull out with a jerk movement.
• Clean the drain tray and wipe it dry.
• Reassemble reversing the sequence and operations.

7 Do's and Don'ts

Do- Clean your appliance regularly (see "Maintenance and cleaning").

Do- Keep raw meat and poultry below cooked food and dairy products.

Do- Take off any unusable leaves on vegetables and wipe off any soil.

Do- Leave lettuce, cabbage, parsley and cauliflower on the stem.

Do- Wrap cheese firstly in greaseproof paper and then in a polythene bag excluding as much air as possible. For best results take out of the appliance an hour before eating.

Do- Wrap raw meat and poultry loosely in polythene or aluminium foil. This prevents drying.

Do- Wrap fish and offal in polythene bags.

Do- Wrap food which have a strong odour or can dry out in polythene bags, aluminium foil or place in an airtight container.

Do- Wrap bread well to keep it fresh.

Do- Chill white wines, beer, lager and mineral water before serving.

Do- Keep food for as short a time as possible and adhere to "Best Before", "Use by" etc. dates.

Do- Defrost food in the fridge compartment.

Don't- Store bananas in your fridge.

Don't- Store melon in your fridge. It can be chilled for short periods as long as it is wrapped to avoid it flavouring other food.

Don't- Store poisonous or any dangerous substances in your appliance. It has been designed for the storage of edible foodstuffs only.

Don't- Consume food which has been stored for an excessive time in the appliance.

Don't- Store cooked and fresh food together in the same container. They should be packaged and stored separately.

Don't- Let defrosting food or food juices drip onto food.

Don't- Leave the door open for long periods as this will make the appliance more costly to run and cause excessive ice formation.

Don't- Put hot food into the appliance. Let it cool down first.

Don't- Try to keep frozen food which has thawed, it should be eaten within 24 hours or cooked and refrozen.

Don't- Leave frozen food at room temperature to thaw; the best way to defrost food is to put it in the fridge to thaw slowly. Make sure you avoid defrosting food or food juices drip onto other food.

Problem solving

If the appliance does not operate when switched on, check whether:

• The plug is inserted properly in the socket and that the power supply is on. (To check the power supply to the socket, plug in another appliance).

• The fuse has blown/circuit breaker has tripped/main distribution switch has been turned off.

• The temperature control has been set correctly.

• New plug is wired correctly if you have changed the fitted moulded plug If the appliance is still not operating after the above checks, please refer to the section on "HOW TO OBTAIN SERVICE".

• Please ensure that above checks have been made as a charge will be made if no fault is found.

BEKO UK AND IRELAND STANDARD MANUFACTURER GUARANTEE TERMS AND CONDITIONS

Your new Beko product is guaranteed against faulty materials, defective components or manufacturing defects.

The standard guarantee starts from the date of original purchase of the product, and lasts for a period of twelve (12) months unless Beko plc (the "Manufacturer") agrees to extend the guarantee for the product in writing.
If you have purchased an American style Fridge freezer, the standard guarantee starts from the date of original purchase of the product, and lasts for a period of twenty four (24) months unless Beko plc (the "Manufacturer") agrees to extend the guarantee for the product in writing.

If you have any questions about the guarantee on your product (including how long it is valid), please contact your retailer or our contact centre on **0333 207 9710** (UK and Northern Ireland) or **01 862 3411** (Republic of Ireland).
This guarantee does not in any way diminish or affect your statutory rights in connection with the product. This guarantee is in addition to your statutory rights as a consumer. If you have any questions about these rights, please contact the retailer from which you purchased the product. In certain circumstances, it is possible that your statutory rights may offer additional or higher levels of protection than those offered under the terms of this guarantee.

What is covered by this guarantee?

- Repairs to the product required as a result of faulty materials, defective components or manufacturing defects.
- Functional replacement parts to repair a product.
- The costs of a Beko Approved Engineer to carry out the repair.

What is not covered?

- Transit and delivery damage.
- Cabinet or appearance parts, including but not limited to control knobs, flaps and handles.
- Accessories and/or consumable items including but not limited to ice trays, scrapers, cutlery baskets, filters and light bulbs.
- Repairs necessary as a direct or indirect result of:
    - Accidental damage, misuse or abuse of a product.
    - An attempted repair of a product by anyone other than a Beko Approved Engineer (the "Engineer").
    - Installation or use of a product where such installation or use fails to meet the requirements contained in this guarantee or the User Instructions Booklet.
- Repairs to a product operated at any time on commercial or non-residential household premises (unless we have previously agreed to the installation environment).

This guarantee is limited to the cost of repairing the product. To the extent permitted by law, the Manufacturer does not accept and will not be held liable for any financial loss incurred in connection with the failure of any product to operate in accordance with the expected standards. Such financial loss includes but is not limited to loss arising from:

- Time taken off work.
- Damaged food, clothing or other items.
- Meals taken at restaurants or from takeaways.
- General compensation for inconvenience.

Important Notes

1. Your product is designed and built for domestic household use only.
2. The guarantee will automatically be void if the product is installed or is used in commercial or non-residential domestic household premises, unless we have previously agreed to the installation environment.
3. The product must be correctly installed, located and operated in accordance with the instructions contained in the User Instructions Booklet provided with your product.
4. Professional installation by a qualified Electrical Domestic Appliance Installer is recommended for all Washing Machines, Dishwashers and Electric Cookers (as incorrect installation may result in you having to pay for the cost of repairing the product).
5. Gas Cookers must be professionally installed by a Gas Safe (or Gas Networks Ireland for Republic of Ireland) registered gas installer.

6. This guarantee is given in respect of products purchased and used within the United Kingdom and the Republic of Ireland.
7. This guarantee is effective from the initial date of purchase of a new product from an authorised retailer and will be void if the product is resold.
8. This guarantee does not apply to graded sales (where the product is purchased as a “second”).
9. Possession of a copy of these terms and conditions does not necessarily mean that a product has the benefit of this guarantee. If you have any questions, please call our Call Centre on the number set out above.
10. The Manufacturer reserves the right to terminate the guarantee if its staff or representatives are subjected to physical or verbal abuse in the course of carrying out their duties.
11. Optional extras, where available (i.e. extendable feet) are supplied on a chargeable basis only.

Does Beko offer replacements?

This is a repair-only guarantee. On occasion, the Manufacturer may at its sole discretion, replace your product with a new product instead of carrying out a repair. Where a replacement is offered, this would normally be an identical model but when this is not possible, a model of similar specification will be provided. The Manufacturer will cover the costs and arrange for the delivery of the new product and for the return of the old product. Any costs related to disconnecting the faulty product and installing the replacement product will not be borne by the Manufacturer unless previously agreed to in writing. The original guarantee will continue to apply to the replacement product; the new product will not come with a new guarantee.

When will the repair take place?

Our Engineers work Monday to Friday 9.00am to 5.00pm. Appointments outside these hours may be possible at the sole discretion of the Manufacturer but cannot be guaranteed. Whilst our Engineers will endeavour to minimize inconvenience and to meet requests for specific timed appointments, this cannot be guaranteed. We will not be liable for delays or if it is unable to carry out a repair because a convenient appointment cannot be arranged.

Will there be any charge for the repairs?

It is your responsibility to provide evidence to the Engineer that your product is covered by this guarantee with a proof of purchase. The Manufacturer reserves the right to charge for the reasonable cost of any service call if:

- You cannot provide evidence that your product is covered by this guarantee.
- Where a service call has been made and the engineer finds that there is no fault with your product.
- That your product has not been installed or operated in accordance with the User Instructions Booklet.
- That the fault was caused by something other than faulty materials, defective components or manufacturing defects.
- For missed appointments.

Payment of these costs are due immediately upon the Engineer providing you with an invoice. The Manufacturer reserves the right to terminate the guarantee if you fail to pay the costs for the service call in a timely manner.

If you are a resident of the United Kingdom, this guarantee will be governed by English law and subject to the English Courts, save where you live in another part of the United Kingdom, in which case the law and courts of that location will apply.

If you are resident in the Republic of Ireland, this guarantee will be governed by Irish law and the Irish courts will have jurisdiction.

This guarantee is provided by Beko plc. Beko House, 1 Greenhill Crescent, Watford, Hertfordshire. WD18 8QU. Beko plc is registered in England and Wales with company registration number 02415578.

BEKO UK AND IRELAND BUILT-IN APPLIANCES GUARANTEE TERMS AND CONDITIONS

If you have purchased a built-in or integrated appliance, and registered it within 90 days of purchase by completing the online registration form, then the standard 12 month guarantee will be extended to 24 months, under the same terms and conditions as detailed in our Standard Guarantee Terms and Conditions.

HOW TO OBTAIN SERVICE FOR YOUR APPLIANCE

Please keep your purchase receipt or other proof of purchase details in a safe place; you will need to have this documentation available should the product require attention under guarantee.

Please take a few moments to complete the details below, as you will need this information when you call us, or to use our online services. When you call us you may be required to input your serial number into your telephone keypad. For help please visit beko.co.uk/support/model-finder.

- The product model number is printed on the Operating Instruction Booklet / User guide.
- The product model and serial number is printed on the Rating Label affixed to the appliance.
- The Retailer (Purchased from) and Date of purchase will be printed on your purchase receipt or other proof of purchase paperwork.

Recording of these details alone will not count as proof of purchase. A valid proof of purchase is required for requesting service under guarantee.

Model number	Serial number	Purchased from	Date of purchase

For service under guarantee or for product advice please call our Contact centre

Before requesting service please check the troubleshooting guide in the Operating Instructions booklet, as a charge may be levied where no fault is found, and even though your product may still be under guarantee.

After arranging service the area around the product must be easily accessible to the Engineer, without the need for cabinets or furniture to be removed or moved.

It is your responsibility to ensure our Engineers have a clean and safe environment to carry out any repairs.

Please have your Model number and Serial number available when you call us, as you may be required to input your serial number into your telephone keypad during your call.

UK Mainland & Northern Ireland:

0333 207 9710

Landline or mobile calls to 0333 numbers cost no more than calls to geographic numbers 01 or 02, and are charged at the basic rate. Calls from landlines and mobiles are included in free call packages but please check with your telephone service provider for exact call charges.

Republic of Ireland:

01 862 3411

Service once the manufacturers guarantee has expired

If you have purchased an extended guarantee please refer to the instructions contained within the extended guarantee agreement document, otherwise please call us using the appropriate number above, where service can be obtained at a charge.

Should you experience any difficulty in obtaining service please call us on **0333 207 9710** or **01 862 3411**.

Contact us though our website

Send us a secure message through our online contact us form. Please visit our website, click Contact Us and choose a product support topic from the list of options. Complete the required details and click send message.

Product registrations

For UK registrations please visit beko.co.uk/register and for the Republic of Ireland visit beko.ie/register.

Beko plc
Beko House
1 Greenhill Crescent
Watford
Hertfordshire
WD18 8QU
Tel: 0845 6004911
Fax: 0845 6004922
e-mail: service@beko.co.uk
website: www.beko.co.uk

CE

www.beko.com

4578336542/AB
EN