SAMSUNG

INSTALL GUIDE

UHD TV

HG43NT690U HG50NT690U HG55NT690U
HG65NT690U HG75NT690U

Thank you for purchasing this Samsung product.
To receive more complete service, please register your product at www.samsung.com
Model _____ Serial No. _____

Before Reading This Install Guide

This TV model is designed for hotels or the other hospitality businesses, supports a variety of special functions, and lets you limit some user (guest) controls.

> Figures and illustrations in this Install Guide are provided for reference only and may differ from the actual product appearance. Product design and specifications may change without notice.

Operational Modes

This TV has two modes: **Interactive** and **Standalone** mode.

- **Interactive** mode: In this mode, the TV communicates with and is fully or partially controlled by a connected Set Back Box (SBB) or Set Top Box (STB) provided by a hospitality System Integration (SI) vendor. When the TV is initially plugged in, it sends a command that attempts to identify the SSB or STB connected to it. If the TV identifies the SBB or STB and the SBB or STB identifies the TV, the TV gives full control to the SBB or STB.
- **Standalone** mode: In this mode, the TV works alone without an external SBB or the STB.

The TV has a **Hotel Option** menu that lets you easily set its various hospitality functions. Please see page 28.
The menu also lets you activate or de-activate some TV and hospitality functions so you can create your optimal hospitality configuration.

Still image warning

Avoid displaying still images (such as jpeg picture files) or still image elements (such as TV channel logos, panorama or 4:3 format images, stock or news bars or crawls) on the screen. Displaying still pictures continually can cause uneven screen wear, which will affect image quality. To reduce the chance that this effect will occur, please follow the recommendations below:

- Avoid displaying the same TV channel for long periods.
- Always try to display a full screen image.
- Reduce brightness and contrast to help prevent the occurrence of after-images.
- Use all TV features designed to reduce image retention and screen burn-in.

Warning! Important Safety Instructions

Please read the Safety Instructions before using your TV.
Refer to the table below for an explanation of symbols which may be on your Samsung product.

<table>
<tr><td colspan="2">CAUTION

RISK OF ELECTRIC SHOCK. DO NOT OPEN.</td><td></td><td>Class II product: This symbol indicates that a safety connection to electrical earth (ground) is not required. If this symbol is not present on a product with a power cord, the product MUST have a reliable connection to protective earth (ground).</td></tr>
<tr><td colspan="2">CAUTION: TO REDUCE THE RISK OF ELECTRIC SHOCK, DO NOT REMOVE COVER (OR BACK). THERE ARE NO USER SERVICEABLE PARTS INSIDE. REFER ALL SERVICING TO QUALIFIED PERSONNEL.</td><td></td><td>AC voltage: Rated voltage marked with this symbol is AC voltage.</td></tr>
<tr><td></td><td>This symbol indicates that high voltage is present inside. It is dangerous to make any kind of contact with any internal part of this product.</td><td></td><td>DC voltage: Rated voltage marked with this symbol is DC voltage.</td></tr>
<tr><td></td><td>This symbol indicates that this product has included important literature concerning operation and maintenance.</td><td></td><td>Caution. Consult instructions for use: This symbol instructs the user to consult the user manual for further safety related information.</td></tr>
</table>

- The slots and openings in the cabinet and in the back or bottom are provided for necessary ventilation. To ensure reliable operation of this apparatus and to protect it from overheating, these slots and openings must never be blocked or covered.
  - Do not place this apparatus in a confined space, such as a bookcase or built-in cabinet, unless proper ventilation is provided.
  - Do not place this apparatus near or over a radiator or heat register, or where it is exposed to direct sunlight.
  - Do not place vessels (vases etc.) containing water on this apparatus, as this can result in a fire or electric shock.
- Do not expose this apparatus to rain or place it near water (near a bathtub, washbowl, kitchen sink, or laundry tub, in a wet basement, or near a swimming pool, etc.). If this apparatus accidentally gets wet, unplug it and contact an authorized dealer immediately.
- This apparatus uses batteries. In your community, there might be environmental regulations that require you to dispose of these batteries properly. Please contact your local authorities for disposal or recycling information.
- Do not overload wall outlets, extension cords, or adaptors beyond their capacity, since this can result in fire or electric shock.
- Power-supply cords should be placed so that they are not likely to be walked on or pinched by items placed upon or against them. Pay particular attention to cords at the plug end, at wall outlets, and at the point where they exit from the appliance.
- To protect this apparatus from a lightning storm, or when left unattended and unused for long periods of time, unplug it from the wall outlet and disconnect the antenna or cable system. This will prevent damage to the set due to lightning and power line surges.

- Before connecting the AC power cord to the DC adaptor outlet, make sure that the voltage designation of the DC adaptor corresponds to the local electrical supply.
- Never insert anything metallic into the open parts of this apparatus. This may cause a danger of electric shock.
- To avoid electric shock, never touch the inside of this apparatus. Only a qualified technician should open this apparatus.
- Be sure to plug in the power cord until it is firmly seated. When unplugging the power cord from a wall outlet, always pull on the power cord's plug. Never unplug it by pulling on the power cord. Do not touch the power cord with wet hands.
- If this apparatus does not operate normally - in particular, if there are any unusual sounds or smells coming from it - unplug it immediately and contact an authorized dealer or service center.
- Be sure to pull the power plug out of the outlet if the TV is to remain unused or if you are to leave the house for an extended period of time (especially when children, elderly, or disabled people will be left alone in the house).
  - Accumulated dust can cause an electric shock, an electric leakage, or a fire by causing the power cord to generate sparks and heat or by causing the insulation to deteriorate.
- Be sure to contact an authorized Samsung service center for information if you intend to install your TV in a location with heavy dust, high or low temperatures, high humidity, chemical substances, or where it will operate 24 hours a day such as in an airport, a train station, etc. Failure to do so may lead to serious damage to your TV.
- Use only a properly grounded plug and wall outlet.
  - An improper ground may cause electric shock or equipment damage. (Class l Equipment only.)
- To turn off this apparatus completely, disconnect it from the wall outlet. To ensure you can unplug this apparatus quickly if necessary, make sure that the wall outlet and power plug are readily accessible.
- Store the accessories (batteries, etc.) in a location safely out of the reach of children.
- Do not drop or strike the product. If the product is damaged, disconnect the power cord and contact a Samsung service center.
- To clean this apparatus, unplug the power cord from the wall outlet and wipe the product with a soft, dry cloth. Do not use any chemicals such as wax, benzene, alcohol, thinners, insecticide, air fresheners, lubricants, or detergents. These chemicals can damage the appearance of the TV or erase the printing on the product.
- Do not expose this apparatus to dripping or splashing.
- Do not dispose of batteries in a fire.
- Do not short-circuit, disassemble, or overheat the batteries.
- CAUTION: There is danger of an explosion if you replace the batteries used in the remote with the wrong type of battery. Replace only with the same or equivalent type.
- WARNING - TO PREVENT THE SPREAD OF FIRE, KEEP CANDLES AND OTHER ITEMS WITH OPEN FLAMES AWAY FROM THIS PRODUCT AT ALL TIMES.
- Use care when touching the TV after it has been on for some time. Some parts can be warm to the touch.



Contents

Before Reading This Install Guide 2
Warning! Important Safety Instructions 3

01 What's in the Box?

02 TV Installation
Assembling the swivel (43”-55”) 8
Installing the LED TV Stand 9
Installing the wall mount kit 12
Securing the TV to the Wall 13
Wall Mount Kit Specifications (VESA) 14
Providing proper ventilation for your TV 14

03 The Remote Control
About the Buttons on the Remote Control 15
Installing batteries into the remote control (Battery size: AAA) 16

04 Initial Setup
Using the TV Controller 18

05 The Connection Panel

06 Connections
Connecting to your Internet network 21
Connecting the TV to an SBB or STB 23
Connecting the Bathroom Speakers 25
Connecting the RJP (Remote Jack Pack) 26

07 Setting the Hotel Option Menus
Hotel Option menu items 29
Welcome Message 39
Hotel Logo 39
USB Cloning 40
Settings Cloned in the Hotel Option Menu 42
Setting Auto Initialize 45
Updating the TV’s Software 48

08 Using a Multi Code Remocon

09 Setting the Soundbar
Samsung Soundbar and Hospitality TV 50

10 Editing Channels
Channel Bank Editor (Smoovie TV Only) 51
Using Channel Editor 52

11 Anti-theft Kensington Lock

12 Specifications and Other Information
Specifications 56
Environmental Considerations 57
Decreasing power consumption 57
Supported Resolutions for UHD Input Signals 58
Display Resolution 58
Read Before Using the Internet Function 60
Dimensions 61
Licenses 65

01 What's in the Box?

Make sure the following items are included with your TV. If any items are missing, contact your dealer.



Remote Control & Batteries (AAA x 2)



Power Cord



Data Cable (depending on the model) (BN39-00865B, BN39-01011E)



Quick Setup Guide / Regulatory Guide



(43”-55”)

Hotel Mount Kit



(43”-55”)

Cable Guide

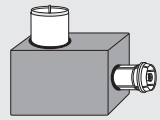

Antenna adapter (Not available in some locations)

- The items’ colors and shapes may vary depending on the models.
- Cables not included can be purchased separately.
- Check for any accessories hidden behind or in the packing materials when opening the box.

The screen can be damaged from direct pressure when handled incorrectly. As shown in the figure, make sure to grip the edges of the screen when you lift the TV.

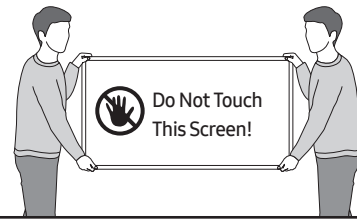

02 TV Installation

Assembling the swivel (43"-55")

WARNING: If you configure the TV to swivel, you must attach it securely to the floor, a desk, a dresser top, etc. as described in the installation instructions.

The LED TVs have swivel stands. You can configure these stands so that the TVs swivel 20 degrees left and right, 60 degrees left and right, or 90 degrees left and right using the BRACKET HOLDER SWIVEL.

- This function is not available on the HG65NT690U, HG75NT690U model.

* The product ships with its stand's swivel angle set to 20°.

* 20° swivel

To configure the TV so that it swivels 20° left and right, insert the prong on the bottom of the stand through the curved hole in the Bracket Holder Swivel marked 20°. Then, fix the Bracket Holder Swivel to the stand using the three supplied screws as shown below.

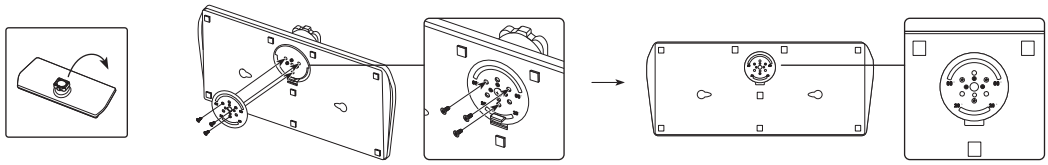

60° swivel

To configure the TV so that it swivels 60° left and right, insert the prong on the bottom of the stand through the curved hole in the Bracket Holder Swivel marked 60°. Then, fix the Bracket Holder Swivel to the stand using the three supplied screws as shown below.

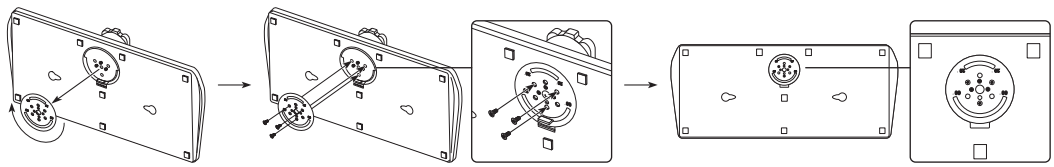

90° swivel

To configure the TV so that it swivels 90° left and right, remove the Bracket Holder Swivel, and then screw the three supplied screws into the stand as shown below.

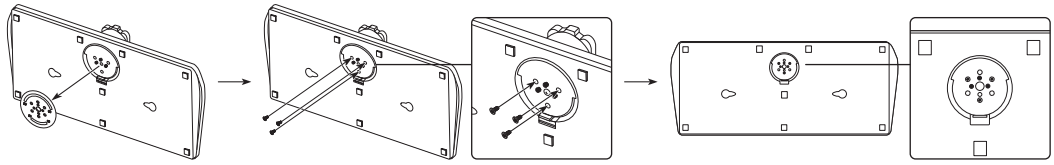

Installing the LED TV Stand

Assembling the Stand and Components (43”-55”)

When installing the stand, use the provided components and parts.

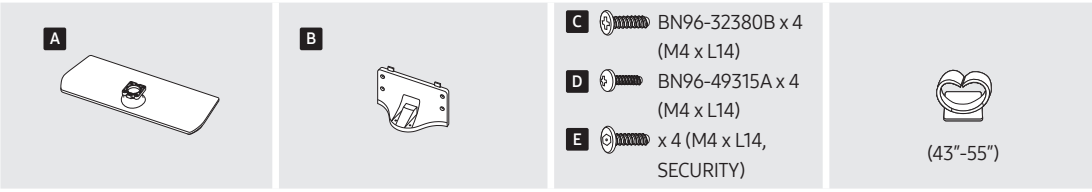

Stand | Guide Stand | Screws | Cable Guide

1

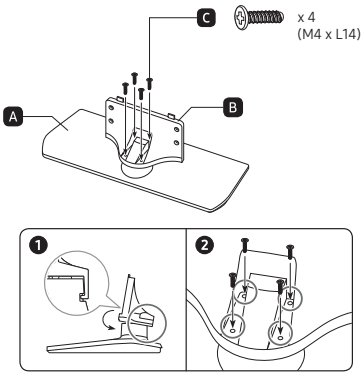

2

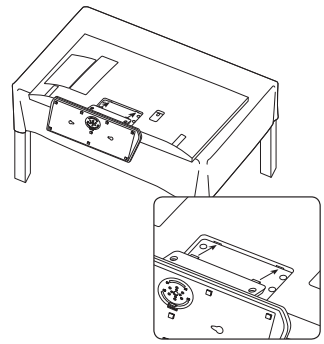

- Place a soft cloth over the table to protect the TV, and then place the TV so that its screen faces down toward the table surface.
- Insert the Stand Guide into the slot on the bottom of the TV.
- Slide and assemble it to the end line in the direction of arrow.

3

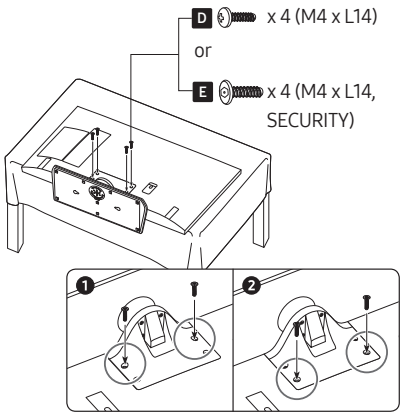

Tight the bottom screw first, and upper screw last.

- Progress the assembly of screw in the manual’s order.

4

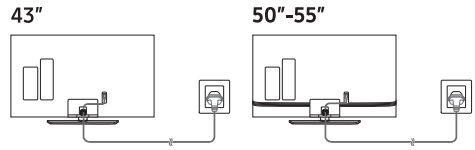

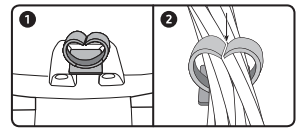

NOTE

- Make sure to distinguish between the front and back of each component when assembling them.
- Make sure that at least two persons lift and move the TV.

Assembling the Stand and Components (65”-75”)

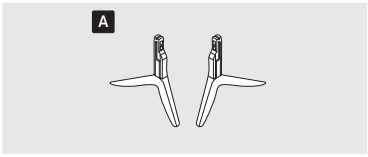

Stand



Cable Guide

1

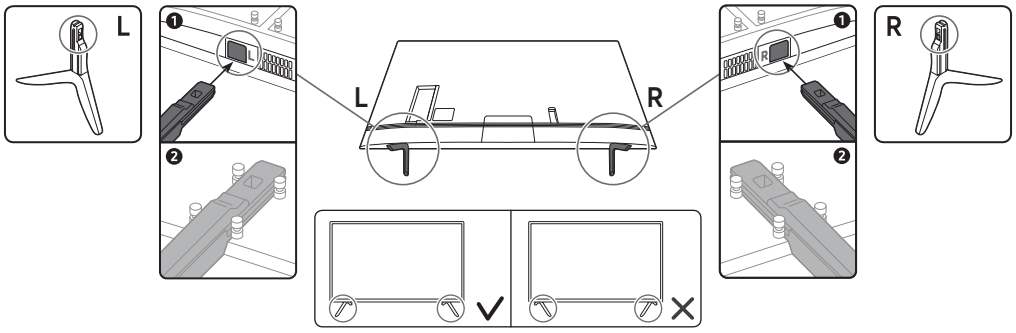

2

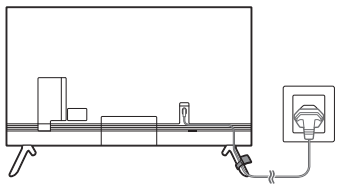

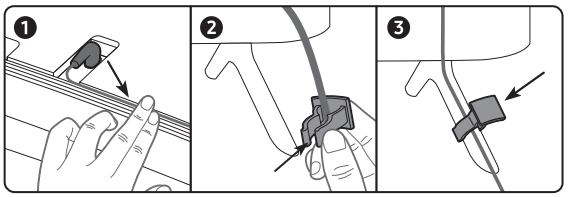

NOTE

- Make sure to distinguish between the front and back of each component when assembling them.
- Make sure that at least two persons lift and move the TV.

Assembling the Hotel Mount Kit (43″-55″)



Short Bolt x 2 | Long Bolt x 2 | Washer x 2 | Nut x 2

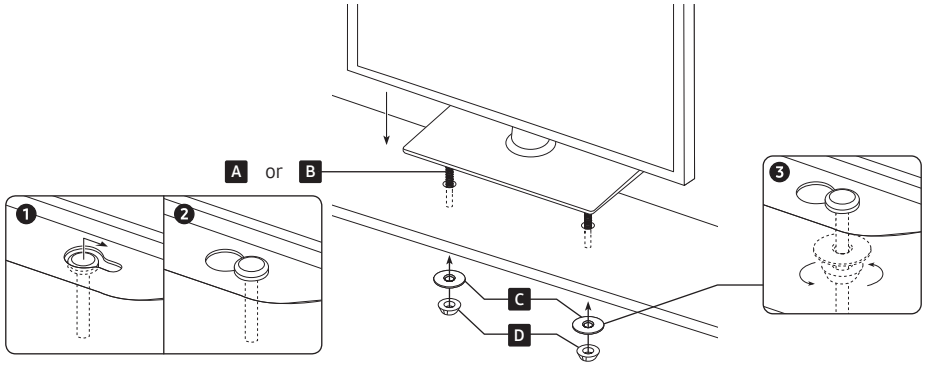

⚠ Affix the stand to a flat surface such as a dresser top, desk top, or entertainment center as shown.

WARNING: To prevent injury, you must attach this TV securely to the floor, a table, a dresser top, etc. with the Hotel Mount Kit as described in these instructions.

Installing the wall mount kit

You can mount the TV on the wall using a wall mount kit (sold separately).

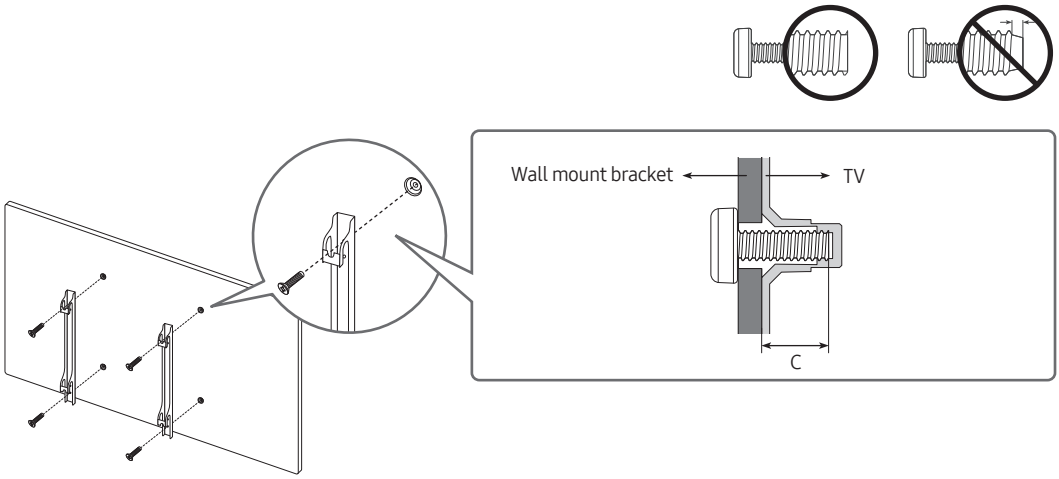

- The Product shape may differ depending on the model.

The wall mount kit (sold separately) allows you to mount the TV on a wall.

For detailed information on installing the wall mount, see the instructions provided with the wall mount. Contact a technician for assistance when installing the wall mount bracket. Samsung Electronics is not responsible for any damage to the product or injury to yourself or others if you select to install the TV on your own.

Securing the TV to the Wall

Caution: Pulling, pushing, or climbing on the TV may cause the TV to fall. In particular, ensure your children do not hang on or destabilize the TV. This action may cause the TV to tip over, causing serious injuries or death. Follow all safety precautions provided in the Safety Flyer included with your TV. For added stability and safety, you can purchase and install the anti-fall device.

Preventing the TV from falling

1. Using the appropriate screws, firmly fasten a set of brackets to the wall. Confirm that the screws are firmly attached to the wall.
   - You may need additional material such as wall anchors depending on the type of wall.
2. Using the appropriately sized screws, firmly fasten a set of brackets to the TV.
   - For the screw specifications, refer to the standard screw part in the table under "Wall Mount Kit Specifications (VESA)."
3. Connect the brackets fixed to the TV and the brackets fixed to the wall with a durable, heavy-duty string, and then tie the string tightly.
   - Install the TV near the wall so that it does not fall backwards.
   - Connect the string so that the brackets fixed to the wall are at the same height as or lower than the brackets fixed to the TV.

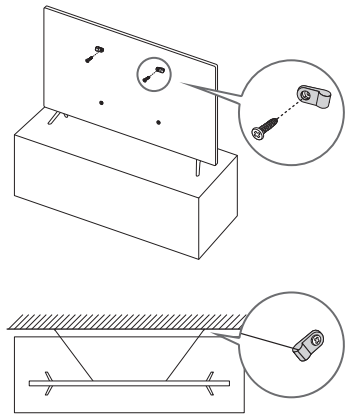

- The product color and shape may vary depending on the model.

Wall Mount Kit Specifications (VESA)

Install your wall mount on a solid wall perpendicular to the floor. If you are attaching the wall mount to building materials other than plaster board, contact your nearest dealer. If installed on a ceiling or slanted wall, the TV may fall and cause severe personal injury.

- The wall mount kit is not supplied, but sold separately.
- NOTE
  - Standard dimensions for wall mount kits are shown in the table below.
  - Samsung wall mount kits contain a detailed installation manual. All parts necessary for assembly are provided.
  - Do not use screws that do not comply with the VESA standard screw specifications.
  - Do not use screws that are longer than the standard dimension or do not comply with the VESA standard screw specifications. Screws that are too long may cause damage to the inside of the TV set.
  - For wall mounts that do not comply with the VESA standard screw specifications, the length of the screws may differ depending on the wall mount specifications.
  - Do not fasten the screws too firmly. This may damage the product or cause the product to fall, leading to personal injury. Samsung is not liable for these kinds of accidents.
  - Samsung is not liable for product damage or personal injury when a non-VESA or non-specified wall mount is used or the consumer fails to follow the product installation instructions.
  - Do not mount the TV at more than a 15 degree tilt.
  - Always have two people mount the TV onto a wall.

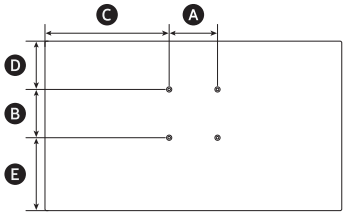

TV size in inches	VESA screw hole specs (A * B) in millimeters	C	D	E	C (mm)	Standard Screw	Quantity
43	200 x 200	379.3	90.4	262.0	20-22	M8	4
50		455.7	148.7	292.3			
55		512.7	205.2	298.9			
65	400 x 300	522.5	225.1	303.0			
75	400 x 400	633.9	230.9	324.2			

Do not install your wall mount kit while your TV is turned on. This may result in personal injury from electric shock.

Providing proper ventilation for your TV

When you install your TV, maintain a distance of at least 4 inches (10 cm) between the TV and other objects (walls, cabinet sides, etc.) to ensure proper ventilation. Failing to maintain proper ventilation may result in a fire or a problem with the product caused by an increase in its internal temperature.

- When you install your TV with a stand or a wall mount, we strongly recommend you use parts provided by Samsung Electronics only. Using parts provided by another manufacturer may cause difficulties with the product or result in injury caused by the product falling.

03 The Remote Control

About the Buttons on the Remote Control

- The images, buttons, and functions of the remote control may differ depending on the model.
- The remote control has Braille points on the **Power**, **Channel**, **Volume**, and **Select** buttons and can be used by visually impaired persons.
- If you use the remote control that comes with your TV to control another TV, some functions may not operate normally.

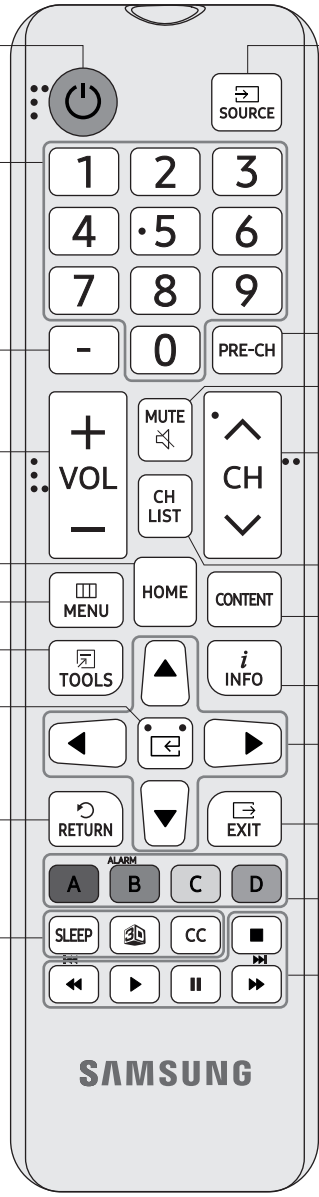

Turns the TV on and off.

Displays and selects the available video sources.

Gives direct access to channels.

Selects additional digital channels being broadcast by the same digital station. For example, to select channel '54-3', press '54', then press '-' and '3'.

Returns to the previous channel.

Turns the sound on and off.

Adjusts the volume.

Changes channels.

Launches **Home Menu**.

Launches the **Channel List**.

Displays the main on-screen menu.

Launches the **APPS**.

Quickly select frequently used functions. (Not available)

Displays information on the TV screen.

(Select)
Press this button to select or run a focused item.

Moves the cursor, selects the onscreen menu items, and changes the values seen on the TV's menu.

Returns to the previous menu.

Exits the menu.

SLEEP
Sets the Sleep Timer.

Use these buttons according to the directions on the TV screen.
B: Enter the hour your want the TV to turn on.

Turns the 3D function on or off. (Not available)

CC
When pressed the button, the **Accessibility Shortcuts** menu appears.

Use these buttons with a specific feature, according to the directions on the TV's screen.

Installing batteries into the remote control (Battery size: AAA)

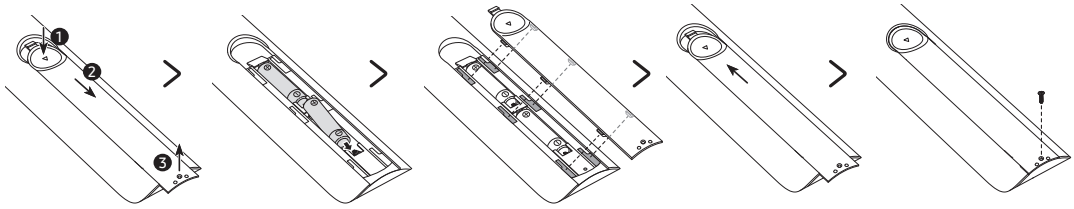

Match the polarity of the batteries to the symbols in the battery compartment.

- Use the remote control within 23 feet of the TV.
- Bright light may affect the performance of the remote control. Avoid using near bright fluorescent lights or neon signs.
- The color and shape of the remote may vary depending on the model.

04 Initial Setup

When you turn on your TV for the first time, it immediately starts the Initial Setup. Follow the instructions displayed on the screen and configure the TV's basic settings to suit your viewing environment.
If you already completed the Initial Setup, run the Initial Setup again using the following menu.

- **Hotel Option** (MUTE > 1 > 1 > 9 > **Select**) > **System** > **TV Reset**

If you select **TV Reset**, the TV resets all values to their factory defaults. When the TV turns off, press the **POWER** button on the remote control to turn on the TV. The TV starts the Initial Setup.

- The image on your TV may differ from the image below depending on the model and geographical area.

1	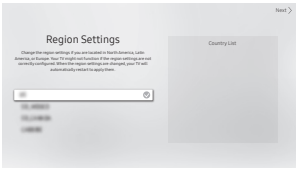	**Select the region settings** • Before select region, refer to the country list information on the right. • If you select the incorrect region, execute **TV Reset** again after the Initial Setup is completed. • If the region is changed, the TV automatically turns off and on.
2	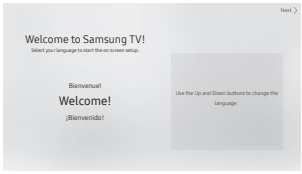	**Selecting your language** You can change the menu language.
3	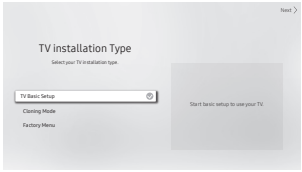	**Selecting your TV installation type** • **TV Basic Setup**: Select to proceed to the next step to set the basic options for using your TV. • **Cloning Mode**: Copy the system settings from the USB or server to the TV. • **Factory Menu**: End Initial Setup and go to **Hotel Option** menu directly. • If you select the incorrect **TV installation type**, execute **TV Reset** again after the Initial Setup is completed.
4	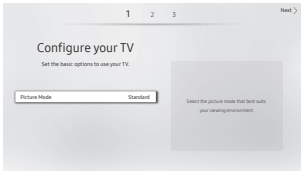	**Setting basic options for using your TV** • **Picture Mode**: You can select the picture mode that provides the best viewing experience.
5		**Scanning Channel** • After channel sanning is completed, select **Next** or press the right directional button on the remote control. • When the RF cable is not connected, this step is skipped.

6	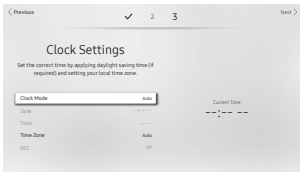	**Setting the current time** • If the TV will be tuned to digital broadcast channels, and these channels transmit date and time information, set the **Clock Mode** to **Auto**. The TV will set the date and time automatically. • If the TV will not be tuned to digital broadcast channels, set the **Clock Mode** to **Manual**, and then set the date and time on the TV manually. • Set **DST** (Daylight Saving Time) to **On** or **Off** to apply to the TV. • Select your time zone on the map that appears.
7	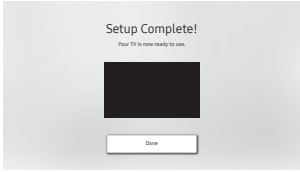	**Setup complete** Select the **Done** button to complete the Initial Setup. Then **Hotel Option** menu appears. Press **POWER** button on the remote control to exit.

Using the TV Controller

You can turn on the TV with the **TV Controller** button at the bottom of the TV, and then use the **Control menu**. The **Control menu** appears when the **TV Controller** is pressed while the TV is On. For more information about its usage, refer to the figure below.

- The screen may dim if the protective film on the SAMSUNG logo or the bottom of the TV is not detached. Please remove the protective film.

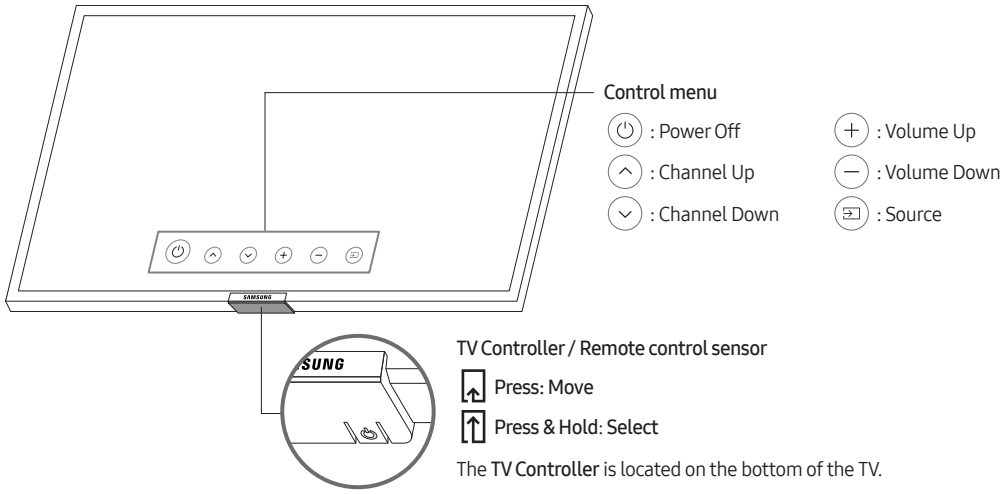

05 The Connection Panel

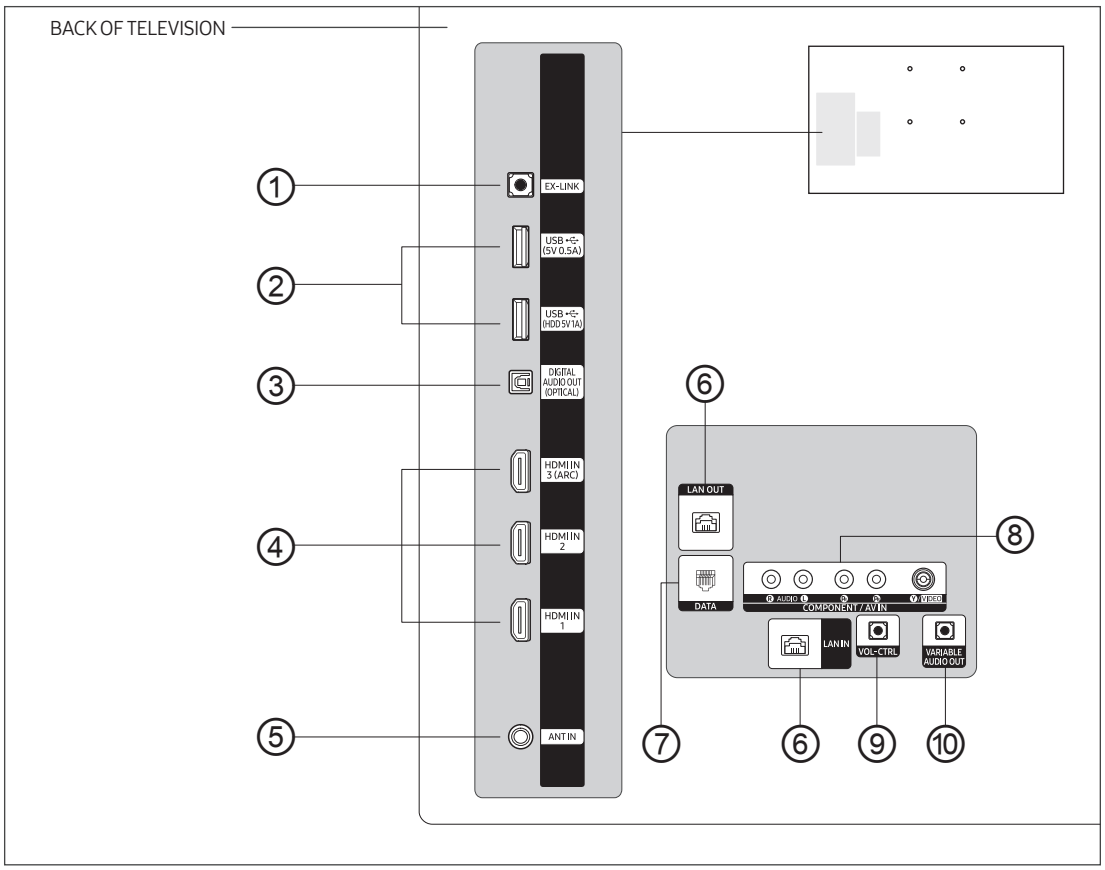

- Whenever you connect an external device to your TV, make sure that power on the TV and the device is turned off.
- When connecting an external device, match the color of the connection terminal to the cable.

① EX-LINK

Connect this port to the port on the optional RJP (Remote Jack Pack). This will allow you to connect external devices (Camcoder, PC, DVD players etc.) easily.

② USB (5V 0.5A), USB (HDD 5V 1A)

– Connector for software upgrades and Media Play, etc.
– Service connection.

③ DIGITAL AUDIO OUT (OPTICAL)

Connects to a Digital Audio component.

④ HDMI IN 1, 2, 3 (ARC)

Connects to the HDMI jack of a device with an HDMI output.

- No separate sound connection is needed for an HDMI to HDMI connection. HDMI connections carry both audio and video.
- It is recommended that the external device of the HDMI 1.3 or 1.4 version will be used with this TV. If you meet the compatible problem like no sound or the abnormal screen or etc with the device of the HDMI 1.2 version, contact to the Samsung customer care center.

⑤ ANT IN

- To view television channels correctly, the TV must receive a signal from one of the following sources:
- An outdoor antenna / A cable television system

⑥ LAN IN / LAN OUT

Connect to a wired LAN using CAT 7 (*STP type) cable.

* Shielded Twisted Pair

⑦ DATA

- Used to support data communication between the TV and the SBB or STB.
- Connects using RJ-12 TV type plugs.

⑧ COMPONENT IN / AV IN

- Use to connect to Component video / audio devices such as DVD players and AV (Composite) devices such as VCRs.
- Connect audio cables to **R-AUDIO-L** on your TV and the other ends to corresponding audio out ports on AV (Composite) devices.
- Connect component video cables (not supplied) to the component ports (**PR**, **PB**, **Y**) on your TV and the other ends to corresponding component video out ports on a DVD player. Match the colors on the ports and cables.
- If you want to connect both a set-top box and a DVD player, you should connect the set-top box to the DVD and connect the DVD to the component ports (PR, PB, Y) on your TV.
- The PR, PB and Y ports on your component devices (DVD) are sometimes labeled **R-Y**, **B-Y** and **Y** or **Cr**, **Cb** and **Y**.
- For AV (Composite), connect RCA audio cables (not supplied) to **R-AUDIO-L** on your TV set and the other ends to corresponding audio out ports on an external device.
- When your are connecting a AV (Composite) device to **AV IN [Y/Video]**, connect the video cable (yellow) to the **AV IN [Y/VIDEO]** port (green/yellow).

⑨ VOL-CTRL

Used to control the volume of the Bathroom speaker. Connect the Volume Control Box on the Bathroom Wall and the **VOL-CTRL** port.

⑩ VARIABLE AUDIO OUT

Used for the audio output to the Bathroom speaker. Connect the Wall Speakers on the Bathroom Wall and the **VARIABLE AUDIO OUT** port.

06 Connections

Connecting to your Internet network

You can set up your TV so that it can access the SMART TV applications through your local area network (LAN) using a wired or wireless connection.

- After you have physically connected your TV to your network, you must configure the network connection to complete the process. You can configure the connection after the Initial Setup process, through the TV's menu (**Hotel Option** > **Network** > **Netwotk Setup**).

Establishing a wireless Internet connection

Connect the TV to the Internet using a standard wireless router or modem.

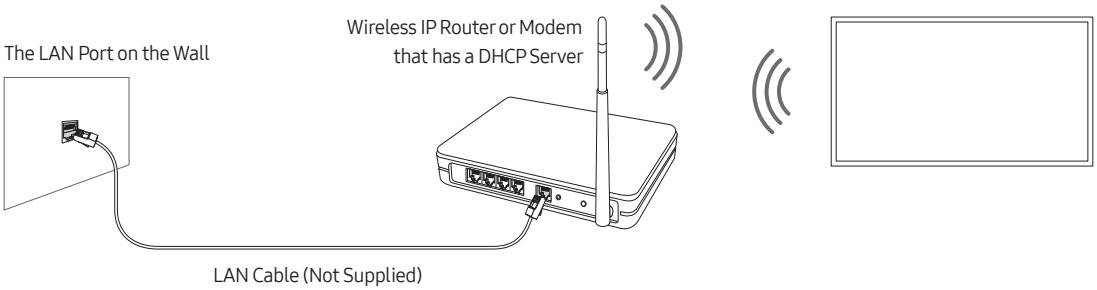

- This Smart TV supports the IEEE 802.11a/b/g /n communication protocols. Samsung recommends using IEEE 802.11n. Otherwise, when you play video over a network connection, the video may not play smoothly.
- To use a wireless network, the TV must be connected to a wireless router or modem. If the wireless router supports DHCP, the TV can use a DHCP or static IP address to connect to the wireless network.
- Select a channel that is not currently in use for the wireless router. If the channel set for the wireless router is currently being used by another device, the result is usually interference and/or a communications failure.
- Most wireless networks have an optional security system. To enable a wireless network's security system, you need to create a security key using characters and numbers, and then enter that key into the router through its menu. You then must enter this security key into any other devices you want to connect to the wireless network.

Network Security Protocols

The TV only supports the following wireless network security protocols:

- Authentication Modes: WEP, WPAPSK, WPA2PSK
- Encryption Types: WEP, TKIP, AES

In compliance with the newest Wi-Fi certification specifications, Samsung TVs do not support WEP or TKIP security encryption in networks running in the 802.11n mode.

If the wireless router supports WPS (Wi-Fi Protected Setup), you can connect the TV to your network using PBC (Push Button Configuration) or a PIN (Personal Identification Number). WPS automatically configures the SSID and WPA key settings.

Your Smart TV cannot connect to uncertified wireless routers.

Establishing a wired Internet connection

There are three main ways to connect your TV to your network using cable, depending on your network setup. They are illustrated below:

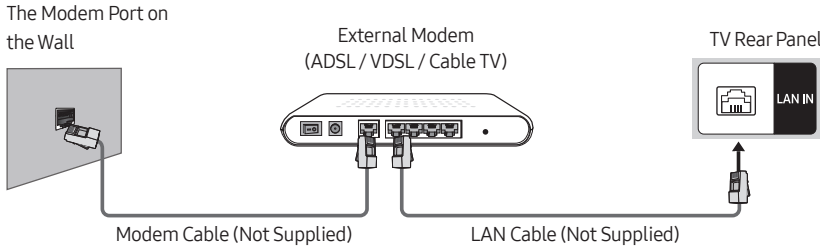

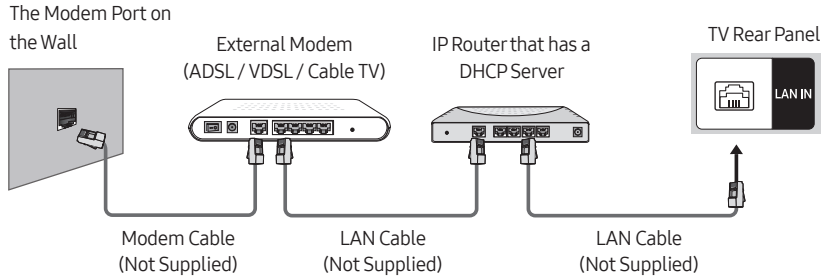

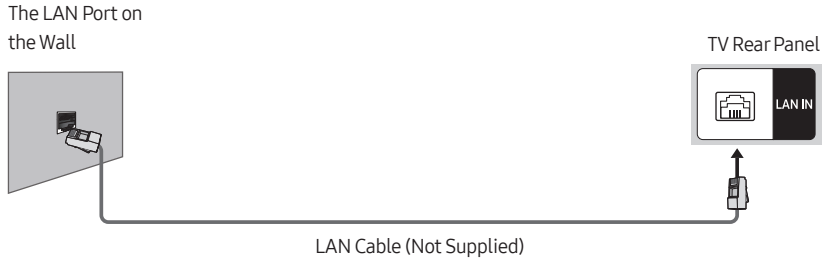

- The TV will not be able to connect to the Internet if your network speed is below 10 Mbps. (The TV does not support network speeds below 10Mbps.)
- Use CAT 7 (*STP type) cable for the connection.
  * Shielded Twisted Pair

Connecting the TV to an SBB or STB

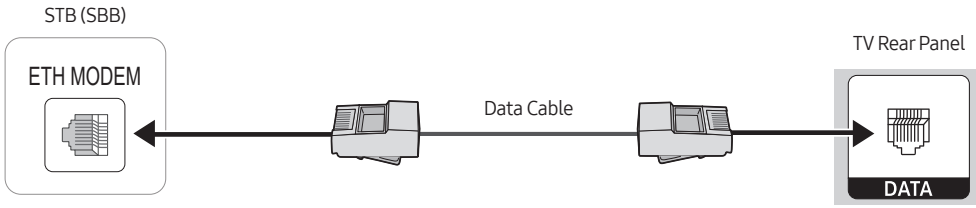

Connect the DATA port of the TV to the **ETH MODEM** port of the STB (SBB) with the Data cable.

- The **ETH MODEM** port name that you connect the Data Cable to may differ depending on the SBB or STB type.
- The remote control IR signal need to meet the following specification to use IR pass through function.
  IR signal reciever specification
  - Band pass filter center frequency: 37.9 ㎑
  - Carrier Frequency, Duty 50%
  - Minimum Burst Length (tburst): 12 pulses (316 us)
  - Minimum Gap Time Between the burst (tburst gap): 16 pulses (422 us)
  - Minimum Gap Time between the data commands (tpause): 25 ㎳

List of Hospitality SI Vendors and Compatible Data Cables Supplied with the TV

- Confirm you are using the correct data cable for your SI vendor. Refer to the code label on the data cables.
- Contact your nearest dealer or your SI Vendor to buy the data cable not included in the TV.

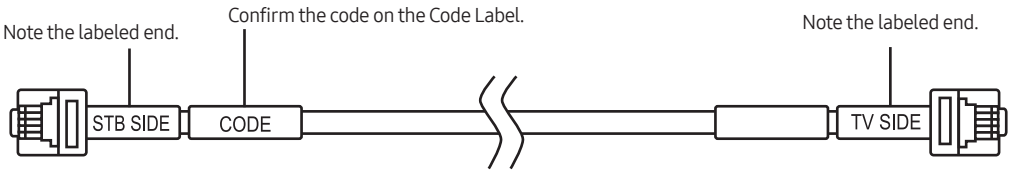

SI Vendor	Cable code	Pin assign	Remark
Samsung OCC Enseo Guest-Tek	BN39-00865B	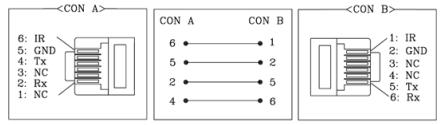	Provided
NXTV	BN39-01011B	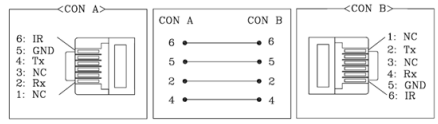	
nStreams	BN39-01110A	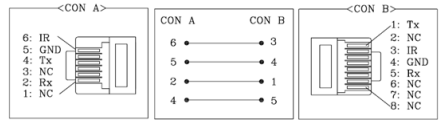	
Sonifi	BN39-01011E	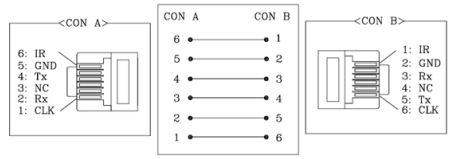	Provided

- Operation Specification of Data Cable(RJ12) : TTL

Connecting the Bathroom Speakers

You can connect the Bathroom Speakers using the following method.

Connecting through the Variable Output (available without an external amplifier)

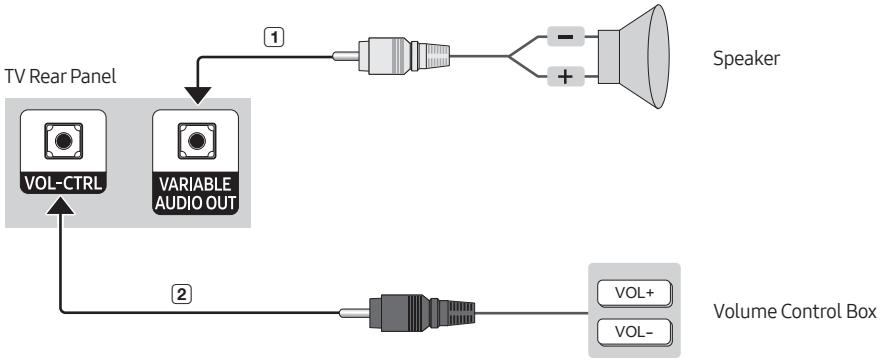

- The rear panel may differ depending on the model.

1 Connect the **VARIABLE AUDIO OUT** port of the TV to the Bathroom Wall Speakers of the hotel.

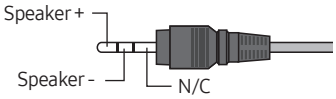

2 Connect the **VOL-CTRL** port of the TV to the Volume Control Box Switch port on the Bathroom Wall of the hotel.

- The maximum speaker output is 4W, 8Ω.
- The **VARIABLE AUDIO OUT** port supports **MONO** sound out only.

- Installing the Volume Control Box
  - If you configure the Volume Control Box as shown in the figure, you can control the volume of the bathroom speakers.
  - The port that connects the Volume Control Box to the TV is a 3.5mm normal Phone jack.
  - Volume Control Box switch is a Tact switch.
- Setting the Sub AMP Mode
  - **0**: Turns the Sub AMP function off (PWM off).
  - **1**: Determines the Sub volume according to the TV speaker sound volume. The TV speaker sound and **VARIABLE AUDIO OUT** volume are determined according to the **Power On Volume Num**, the **Min Volume**, and the **Max Volume** values in the **Hotel Option** menu.
  - **2**: Determines the volume according to the Volume Control Box setting.
- **VOL-CTRL** Port Specifications
  - **Speaker Wire**: Use speaker cable no more than 82 feet (25m) in length.

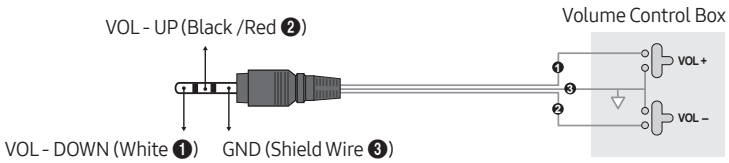

Connecting the RJP (Remote Jack Pack)

Connect the input jacks on the TV to the RJP. The RJP lets guests connect audio and video sources to the TV.

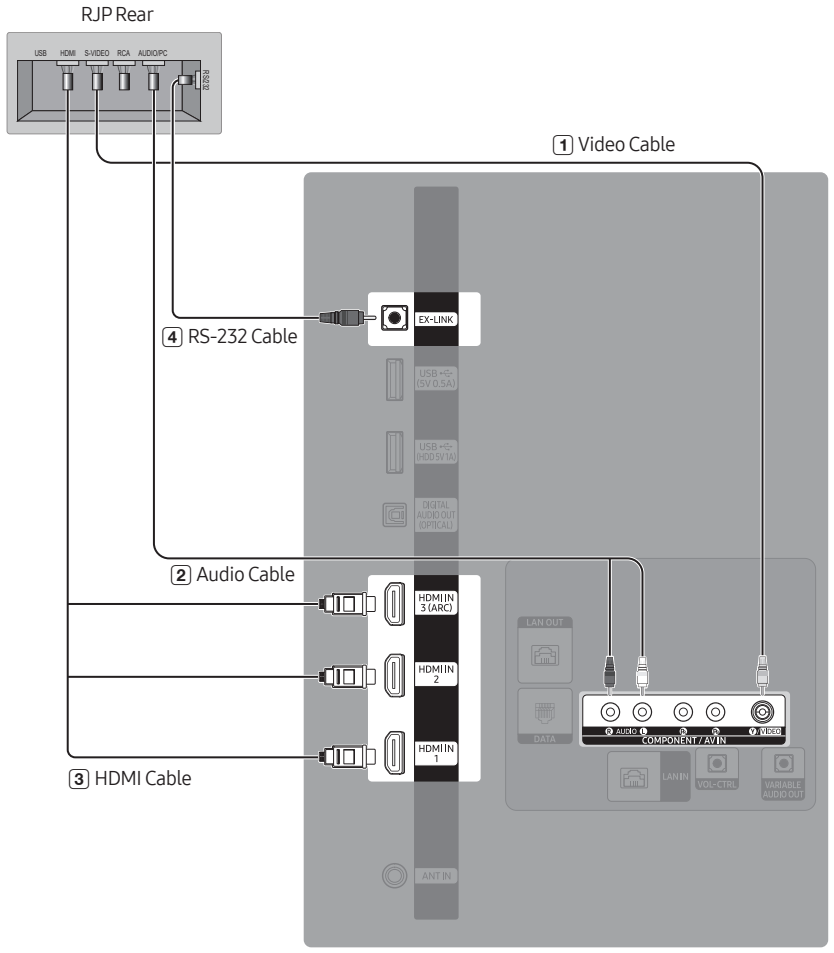

- The rear panel may differ depending on the model.

1 Connect the **AV IN [Y/VIDEO]** port of the TV to the S-VIDEO port of the RJP.

2 Connect the **[R-AUDIO-L]** port of the TV to the AUDIO/PC port of the RJP.

3 Connect the **HDMI** port of the TV to the HDMI port of the RJP.

4 Connect the **EX-LINK** port of the TV to the RS/232 port of the RJP.

– This Samsung TV is compatible with the TeleAdapt TA-7610 RJP only.

- **RJP (Remote Jack Pack)**: The RJP is a hardware module that has various audio and video inputs (A/V video, A/V audio, PC and HDMI) and corresponding outputs. The corresponding outputs are connected from the RJP to the TV. The RJP communicates with the TV via RS232. The RJP communicates with the TV by sending messages regarding active or inactive sources.
  - A group of **Hotel Option** menu items let you assign numbered priorities to the jacks of the RJP. **1** is the highest priority and **2** is the lowest. When a guest connects external sources to the RJP jacks, the TV will automatically switch between sources based on the priority you have assigned them in the **Hotel Option** menu. For example, lets say AV is set to **1** and HDMI to **2**. If a guest has attached a device to the HDMI jack, and then plugs a device into the AV jack, the TV automatically switches to the device plugged into the AV jack (the jack with the higher priority). Note that a guest can also switch between devices manually by pushing a button on the RJP.
- To reset the RJP to its factory default state, press the AV and HDMI buttons simultaneously for 10 seconds. When all button LEDs blink 5 times, the RJP reset is complete.
- The RJP will automatically turn off any LEDs after 5 minutes to avoid unnecessary light pollution in the hotel room. The LEDs that were turned off will turn on again if the guest touches any of the buttons and the 5 minute timer will restart. If the guest then touches another source button, the TV will change to the selected source and the corresponding LED will be lit.
- After the RJP reset or the TV turns off/on, it takes approximately 10 seconds to establish communications between the TV and the RJP.
- The following table shows the approximate time in seconds it takes to switch from the TV to an input source, based on assigned or default priorities.
  - When no inputs are connected.

Source	To Connect
AV	2 sec
HDMI	3.9 sec

  - When two or more inputs are connected to the RJP and one of the input sources is disconnected and then reconnected.

Source	Disconnect	To Connect	Total
AV	4.5 sec	2 sec	6.5 sec
HDMI	3.9 sec	3.9 sec	7.8 sec

  - If the RJP has all its live sources (AV, PC, and HDMI) connected, AV has been assigned the highest priority, the RJP is in HDMI mode, and a guest removes and reconnects the AV source, the minimum time required to switch to the AV source is 6.5 seconds.
  - To play audio devices (Ipods, MP3 devices, etc.) through the RJP, you must turn **Music Mode AV** or **Music Mode Comp** in the **Hotel Option** menu on.
  - Music mode in the TA-7610 RJP is supported by the AV jack only. **HDMI Music Mode** is available for the Guestlink RJP only.

07 Setting the Hotel Option Menus

To access the **Hotel Option** menus, press **MUTE** > **1** > **1** > **9** > **Select** buttons on your remote control.
To control the TV functions in the **Hotel Option** menu, the TV has two modes, the **Standalone** mode and the **Interactive** mode. The menu items that differ between the modes are listed below. All other items appear in both modes.
Menu items in the **Standalone** mode only:

- **SI Vendor**: **Smoovie** / **SSCP**
- **Network** / **Home Menu** / **REACH Solution** / **H.Browser Solution** / **HMS** / **Virtual Standby** / **Room Number** and its submenus.

Menu items in the **Interactive** mode only:

- **SI Vendor**: Samsung and other vendors.

After a menu appears, follow these general directions to navigate and change values:

- Use the directional buttons on the remote control to move from menu item to menu item.
- Press the **Select** button on the remote control to select a menu item. The screen displays that menu item only.
- Press the left or right directional button to change a value. The right directional button increases numerical values. The left arrow button decreases numerical values.
- When the screen is displaying one menu item, you can press the up or down directional button to display the next or previous menu item.
- Press the **RETURN** or **MENU** button to exit the current menu item and go to a higher menu level or the main menu.
- To exit a **Hotel Option** menu, turn off the TV, and then turn it on again. Any changes you made are saved except SI (System Integration) vendor. For changes to SI vendor, you must turn the TV off, wait until the power indicator at the bottom of the TV glows steadily. And then unplug the TV, wait for the power indicator to go off, and then plug the TV in again.

To change menus between the **Interactive** mode and the **Standalone** mode, follow the steps below:

1. Highlight the **Hospitality Mode** menu item in the top left corner of the menu.
2. Press the **Select** button on the remote control. Only the **Hospitality Mode** menu item is displayed.
3. Press the left or right directional button to change the **Hospitality Mode** item from **Standalone** to **Interactive** or from **Interactive** to **Standalone**.
4. Press the **RETURN** or **MENU** button on the remote control. The entire menu re-appears with your selection displayed in the **Hospitality Mode** field.
   - After you have set the values in one TV, you can clone those values to multiple TVs.
   - For more information about the USB cloning refer to page 40.

Hotel Option menu items

To enter this menu, press the **MUTE** > **1** > **1** > **9** > **Select** buttons on the remote control in order.
To exit from this menu, turn off (or turn off and unplug the power cable if you have changed SI vendor) the TV, and then turn on again. Any changes you made are saved.

- The menu items may not be supported depending on the models and SI vendor.

Hotel Option menu Item		Description
Hospitality Mode		Select **Hospitality Mode**. • **Interactive**: TV works with an SI STB or SBB. • **Standalone**: TV works alone, without an SI STB or SBB.
SI Vendor		• **Interactive**: Samsung / OCC / MTI / Nstreams / Enseo / Cardinal / Guestek / SeaChange / MDC / Innvue • **Standalone**: OFF / Smoovie / SSCP
Power On	Power On Channel	Set the channel to display when the TV is turned on. • **User Defined**: Lets you set the channel number manually. See **Power On Channel Num** or **Power On Channel Type** below. • **Last Saved**: If you select this item, when the TV is turned on, it displays the channel it was displaying when it was turned off.
	Power On Channel Num	When the TV is turned on, it switches automatically to this channel.
	Power On Channel Type	Select the type of the channel will be displayed when the TV is turned on. **ATV** (analog air band), **DTV** (digital air band), **CATV** (analog cable band), **CDTV** (digital cable band), **IPTV** (IP channels).
	Power On Volume	• **User Defined**: Lets you set volume level manually. • **Last Saved**: When the TV is turned on, it returns to the volume that had been set when the power had been turned off.
	Power On Volume Num	The TV turns on with set volume level in **Standalone** mode.
	Min Volume	The minimum volume level the user can set in **Standalone** mode.
	Max Voume	The maximum volume level the user can set in **Standalone** mode.
	Power On Source	Select the input source to display when the TV is turned on.
	Power On Option	Determines the TV's state when power returns after a power failure or after you have unplugged the TV and then plugged it in again. • **Last Option**: Returns to its last power state. If it was in standby mode, it returns to standby mode. If it was on, it turns on. • **Power ON**: When the power returns, the TV turns on. • **Standby**: When the power returns, the TV enters the standby mode.

Hotel Option menu Item		Description
Channel	Channel Setup	Gives you direct, immediate access to some of the channel menu functions on the **Broadcasting** menu such as **Auto Program**, **Audio Options**, etc.
	Channel Editor	Lets you edit the channels stored in the TV's memory. • Change the channel numbers and names, manage genre and language groups and delete channels. • Apply the **Screen Off** to channels you select. The **Screen Off** blanks out the video from a channel and outputs only audio. • Lets you view information about each channel easily, without your having to display each channel directly.
	Channel Bank Editor	Edits channels, with 3 different Bank options. There are specific channels customers can enjoy, depending on the Bank card. • This function is only available when set to **Hospitality Mode**: **Standalone**, **SI Vendor**: **Smoovie**.
	Mixed Channel Map	Enables showing/browsing all antenna type (Air/Cable) channels at the same time. • **ON**: When set to on, guests can access the complete channel map irrespective of the selected antenna type. The **Channel List**/**Channel Editor** will also populate Air as well Cable type channels. • **OFF**: When set to off, guest can access the channel map corresponding to the selected antenna type (Air/Cable) only. The **Channel List**/**Channel Editor** will only show the selected antenna type channels.
	Dynamic SI	• **ON**: Do not check the DTV program channel number. • **OFF**: Check the DTV program channel number.
	MyChannel	Enable or disable the **My Channel** function. • This function is not available when set to **Hospitality Mode**: **Standalone**, **SI Vendor**: **Smoovie**.
Menu OSD	Picture Menu Lock	Enable or disable the **Picture** menu.
	Menu Display	• **ON**: The main menu is displayed. • **OFF**: The main menu is not displayed.
	Channel Menu Display	• **OFF**: **Broadcasting** menu is disable for guest. • **ON**: **Broadcasting** menu is enable for guest.
	Panel Button Lock	Turning the TV Controller button operations on or off. • **Unlock**: Unlocks TV Controller button. • **Lock**: Locks TV Controller button. • **OnlyPower**: Locks TV Controller button except the power off function.

Hotel Option menu Item		Description
Clock	Local Time	Select the way to update the clock data • **Standalone**: **Manual** / **Time Channel** • **Interactive**: **Manual** / **Auto** / **Time Channel** – **Manual**: The clock is set automatically from the DTV channel or manually by the user when the TV is in **Standalone** mode. – **Time Channel**: The clock is set from the selected channel.
	Timer Type	Enable or disable the alarm function. • **WakeUp**: Enable the alarm function to turn on the device at the specified time. • **OnOff**: Disable the alarm function and enable on or off timer.
	Time Channel Type	Select the type of the channel to update the clock data. • This function is only available when **Local Time** set to **Time Channel**.
	Time Channel Num	Select the number of the channel to update the clock data. • This function is only available when **Local Time** set to **Time Channel**.
	NTP Settings	To update TV time from server accessible over the same Network. Enable only when **H.Browser Solution** selected. • **Network Time Protocol**: Use/Don't Use • **Server URL**: URL of the server from which Time is to be updated. • **Time Zone**: Time Zone of the region.
Music Mode	Music Mode AV	Allows music output from an mp3/audio player connected to an AV input source on the TV. When set to on, you can hear sound from the player through the TV whether there is a video signal or not. Also mutes the video so the TV does not display a picture when a guest is playing music. The TV's backlight, however, remains on.
	Music Mode Comp	Allows music output from an mp3/audio player connected to an component input source on the TV. When on, you can hear sound from the player through the TV whether there is a video signal or not. Also mutes the video so the TV does not display a picture when a guest is playing music. The TV's backlight, however, remains on.
	Music Mode Backlight	When set to off, the TV's backlight is turned off entirely when a guest is playing music through the extenal device. (ex. DVD player, USB flash drive) To save energy, set to off. To play the music through the external device, press the **SOURCE** button on the remote control, and then select external device icon.

Hotel Option menu Item		Description
Remote Jack Pack	Priority AV	Lets you set the priority of the 7610 RJP AV jack. You can choose 1, 2, with 1 being the highest and 2 the lowest. The TV automatically displays the source with the higher priority. For example, lets say AV is set to 1 and HDMI is set to 2. If a guest has attached a device to the HDMI jack, and then plugs a device into the AV jack, the TV will automatically switch to the device plugged into the AV jack (the jack with the higher priority). Note that a guest can also switch devices manually by pushing a button on the 7610 RJP.
	Priority HDMI	Lets you set the priority of the 7610 RJP HDMI jack. You can choose 1, 2, with 1 being the highest and 2 the lowest. The TV automatically displays the source with the higher priority.
	HDMI Option	Select which HDMI source of the TV is connected to the RJP jack. (HDMI1/HDMI2/HDMI3)
	HDMI Music Mode	Allows music output from an mp3/audio player connected to an HDMI input source. When set to on, you can hear sound from the player through an HDMI input of the RJP whether there is a video signal or not. • This option is only compatible with the Guest link RJP.
External Source	USB Pop-up Screen	When USB is connected to the TV : • Default: A popup window appears. • Automatic: This enters the USB content menu automatically. • Disable: Neither the popup window nor the menu appears.
	External Source Banner	If set to on, the TV displays the External Source Banner (information) when you change the TV source to another external input, press the SOURCE button on the remote control, or turn on the TV. • ON: The External Source Banner (information) is displayed on the TV screen. • OFF: The External Source Banner (information) is not displayed on the TV screen.
	Auto Source	• ON: When an external input source is connected to the TV, the TV identifies the input source, and then automatically switches to that input source. • OFF: Auto Source function is disabled.
	Anynet+ Return Source	Select the source to return after stopping an Anynet+ (HDMI-CEC) connection. • This function is especially useful for the Guestlink RJP.

Hotel Option menu Item		Description
Bathroom Speaker	Sub Amp Mode	Determines the bathroom speaker sound AMP operation mode. • 0: Turns the bathroom speaker sound AMP function off (PWM off). • 1: The bathroom speaker sound volume follows the TV speaker sound volume identically. The bathroom speaker sound volume is controlled by the TV remote control or TV Controller button. • 2: The bathroom speaker sound volume is controlled by the bathroom speaker volume controller.
	Sub Amp Volume	The initial bathroom speaker sound volume after TV is turned on.
Eco Solution	Power Saving Mode	Adjusts the brightness of the TV to reduce power consumption. • OFF: Turns off the energy saving function. • Low: Sets the TV to low energy saving mode. • Medium: Sets the TV to medium energy saving mode. • High: Sets the TV to high energy saving mode.
Logo/ Message	Welcome Message	Displays the welcome message for 60 seconds when the TV turns on.
	Edit Welcome Message	Edits the welcome message.
	Hospitality Logo	Turns the Hospitality Logo function is set to OFF, BMP, AVI, BOTH. If the function is not set to OFF, the TV is turned on, the logo is displayed, before the signal from the initial source, for the amount of time set in Logo Display Time. • The DivX codec is not supported.
	Hospitality Logo DL	You can download the startup logo from the connected USB flash drive. Hospitality logo file requirements: • Image or video files only. • The image file is supported up to 2 MB. • The video file is supported up to 50 MB. • File can only be named "samsung_image.*," "samsung_video.*"
	Logo Display Time	Set the time displayed Hospitality Logo. (3/5/7 seconds).
Cloning	Clone TV to USB	Clone the current TV options to a USB memory device.
	Clone USB to TV	Clone the saved TV options on a USB memory device to the TV.
	Setting Auto Initialize	If you set Setting Auto Initialize to On, the TV menu items are restored again to their values cloned initially when the TV turns off and then on.

Hotel Option menu Item		Description
Network	Network Setup	If this item is entered into, **Network** menu is displayed. The **Network** menu is used for setting network like internet access. • **Network Status**: View the current network and Internet status. • **Cast**: Turns on or off the **Cast**. When **Cast** is set to on, your mobile devices can find the TV name in Wi-Fi connection list. – When the TV connected with wireless network, **Cast** is enabled. • **Security key**: Set a security key that you need to enter on other devices so they can connect to the TV. • **Open Network Settings**: Connect to an available network. – Input the generated security key into the device you want to connect. – If network does not operate normally,check the security key again. An incorrect security key may cause a malfunction. – **Cast** may not be available if it is not supported by the model. – Maximum number of devices that can be connected: 4 devices. – Bitrate: >10 Mbps/device. (The TV does not support network speeds below 10Mbps.) – The specifications above are based on our in-house testing. Actual performance may vary depending on your wired/wireless network environment.
	Apps ID Setting	The feature to set specific Hotel ID for installing the app of the correspoding hotel in the Hotel TV.
	Apps Setting	Enters Samsung Apps for managing current apps and installing new apps in the Hotel TV.
	Service Discovery	Can use this feature to enable the function like DLNA.
	LAN OUT	Enable/disable LAN Out. When enabled, the TV can work as a wired router for other network devices.
	VLAN ID	Create separate VLAN (Virtual Local Area Network) groups. A 3-digit number can be entered between 1 and 255 for the VLAN ID.
	Solution VLAN ID	When VLAN (Virtual Local Area Network) is used, set a VLAN ID to be assigned to a Solution (such as SYNC, H.Browser etc.).
	Device LAN ID	Set a VLAN (Virtual Local Area Network) ID to be assigned to external devices connected to the LAN OUT port.
	ARP Interval	Adjust the ARP (Address Resolution Protocol) interval value. • Setting value: 2 / 5 / 10 / 30 / 60 / 120 / 180 / 600 / 1800 / 3600 second (default: 60 sec)
System Manager		Gives you direct and immediate access to **System Manager** menu such as such as **Time**, **Language**, **Change PIN**, etc. **System Manager** allow you to adjust your TV's system and customize settings for your viewing environment.

Hotel Option menu Item		Description
Security	Factory Lock	Disable entry to **Hotel Option** menu. • **ON**: The password is needed before entering **Hotel Option** menu. • **OFF**: Disable this function.
	Password Popup	Enable or disable password input popup window. If this option is set to off, the TV will not display the password input popup window when entering the **Hotel Option** menu. If set to on, the password input popup window appears.
	Password Input	If this function is enabled, the password input popup window appears which asks for an 8-character security password. The admin must enter a password before applying or updating security preferences. After the correct password is entered, options such as **Password Setting**, **Password Reset** and **Security Mode** are available.
	Password Setting	User can change the password.
	Password Reset	Password is reset to "00000000."
	Security Mode	Provides password protected administrative fucntionality to enable or disable features of hospitality TV, such as **USB**, **HDMI**. To use this option, **Security Mode** set to on. After **Security Mode** set to on, options such as **USB**, **HDMI** are automatically enabled. **Clone USB to TV** and **TV Reset** will be disabled in the **Hotel Option** menu.
	USB	Enable or disable USB access. If this function is set to disable, access to USB media is blocked.
	HDMI	Enable or disable HDMI access. If this function is set to disable, Anynet, HDMI source, HDMI type external channels will not be accessible to the user.
DRM	DRM Mode	Configures DRM support. • **OFF**: Turns off DRM support. • **LYNK DRM**: Select to turn on S-LYNK DRM CAS support only. • **Pro:idiom**: Select when there are any Pro:Idiom channels. • **LYNK DRM**, **PI**: Select when there are **LYNK-DRM** and **Pro:Idiom** channels at the same time.
	PI AES Data	Displays the current state of Pro:Idiom AES. • This function is only available **DRM Mode** set to **Pro:idiom** or **LYNK DRM**, **PI**.

Hotel Option menu Item		Description
System	Self Diagnosis for TV	Enter **Self Diagnosis** Menu. • **Start Picture Test**: Use this test when you experience a problem with your TV's picture. • **Start Sound Test**: Use this test when you experience a problem with your TV's sound. • **Signal Information**: Show digital broadcasting signal information. • **Reset Smart Hub**: Reset the Smart Hub and Samsung account settings stored on your TV. • **Reset**: Restore all TV settings, excluding network settings, to the factory defaults. (Not available)
	Self Diagnosis for HTV	Lets you check the state of Pro:Idiom and its communication with the SI STB or SBB. If you have any problems with the Pro:idiom encryption channel or the communications with the SI STB or SBB, use this diagnosis function. If **PI DTV Channel Key Loss (Pro:Idiom DTV Channel Key Loss)** appears to have failed and the Pro:Idim encryption channel has failed to play content, first check the broadcasting systems related to Pro:Idiom encryption. If your broadcasting system does not have a problem, contact Samsung Service. If **STB SI Vendor Setting** appears to have failed and communication with the SI STB or SBB has failed, first check your SI STB or SBB. If your SI STB or SBB does not have a problem, contact to Samsung Service.
	Software Update	Lets you upgrade the TV Software with a USB flash dirve.
	Sound Bar Out	If the Samsung Sound Bar device is connected to this TV, this item lets you to select where the TV sound is outputted when the TV is turned on. • **ON**: When the TV is turned on, the TV sound is automatically outputted in the Sound Bar device only. • **OFF**: When the TV is turned on, the TV sound is automatically outputted in the TV speaker device.
	Contact Samsung	Display the web site of related Samsung service center, software version, and Mac address information.
	Standby LED	When the TV is in standby mode, you can configure the settings of the power indicator. • **ON**: The LED is on. • **OFF**: The LED is off.
	Boot Logo	To enable or disable displaying the Samsung logo when the TV turns on.
	TV Reset	Returns all settings on the TV to their factory defaults.

Hotel Option menu Item		Description
Home menu	Home Menu Display	Activate **Home Menu** in **Standalone** mode for user. • **ON**: **Home Menu** enabled. • **OFF**: **Home Menu** disabled. In Standalone mode, you can quickly access to various features such as **Source**, **Media Play** etc and settings such as **Picture Size**, **Language**, etc.
	Home Menu Editor	Edit and manage TV functions to be used from Home Menu.
	Home Menu Auto Start	This option allows you to set **Home Menu** as first screen for user. • **ON**: **Home Menu** is shown as first screen. • **OFF**: Do not show **Home Menu** as first screen.
REACH Solution	REACH RF Mode	Turn on or off the **REACH RF Mode**. When set to on, the TV can operate with the REACH Server (Modulator) through the RF cable.
	REACH IP Mode	You can turn on or off the **REACH IP Mode**. When set to on, the TV can operate with the REACH IP Server through the IP network.
	Server URL Setting	You can enter the address of REACH IP Server. (Example: http://192.168.1.2:443)
	REACH Channel	This is a DTV cable channel PTC number for receiving REACH data when the **REACH RF Mode** set to on. The value must be same as the value set on the REACH Server (Modulator).
	Group ID	You can set the TV's group ID to manage TVs in groups on the REACH Server (Modulator).
	REACH Update Time	You can set the specific time to receive and update REACH data from the REACH Server (Modulator). (Operates when the AC power cord is plugged in and the power is off.) • **OFF**: You can turn off the **REACH Update Time** function. • **12:00 am**: 12:00 am everyday • **2:00 am**: 2:00 am everyday • **12:00 pm**: 12:00 pm everyday • **2:00 pm**: 2:00 pm everyday
	REACH Update Immediate	When set to on, the TV will receive and update REACH data from the REACH Server (Modulator) right after the power is off. (Operates when the AC power cord is plugged in and the power is off.)
	REACH Config Version	Displays the TV configuration data version received from the REACH Server.

Hotel Option menu Item		Description
H.Browser Solution	H.Browser Mode	You can turn on or off the **H.Browser Mode** and run the **H.Browser Web App**.
	H.Browser Vendor	You can select the **H.Browser Vendor**.
	URL Launcher Setting	**H.Browser Solution** settings menu • **Install Web App**: Enter the H.Browser server URL where Web App and sssp_config.xml files are located. • **Uninstall**: You can delete the installed Web App. • **Timeout setting**: Set the timeout period for connecting to the URL. • **Developer Mode**: If you used Tizen Studio (SDK) for development, you can connect to the Host PC (which SDK is installed) to use the development tool.
HMS	HMS Mode	You can turn on or off the **HMS Mode**. When set to on, the TV can operate with the HMS server through the IP network.
	HMS Server URL Setting	You can enter the HMS server's address. (Example: http://192.168.1.2:8080)
	HMS Gateway Role	When there is one TV per room, set to **Master**. When there are more than one TVs per room, set the main TV to **Master** and the others to **Slave**.
	HMS HalfTicker Display	Set to on if you want to use the HalfTicker UI. When set to off, the HalfTicker UI will not be displayed. However, all the hot keys (except for room control key) on the HMS remote control will work normally without the **HalfTicker UI Display**.
Virtual Standby	Virtual Standby Mode	When the AC power cord is plugged in and the power is off, this option maintains the TV's important features even after the screen is off. • Electricity consumption may vary depending on the environment.
	Reboot Time	After the TV power is off (in **Virtual Standby Mode**) if there is no input from the user within the set **Reboot Time**, the TV will reboot and enter **Virtual Standby Mode** again.
Room Number		You can set the room number of the TV's location.

- Refer to the manual of each solution for details about functions and settings of the solutions such as REACH, HMS, and H.Browser.
- REACH (Remote Enhanced Active Control for Hospitality) is a professional, interactive remote controller that lets you deliver TV firmware updates, cloning data, channel mapping changes, REACH contents, and TICKER contents through RF cable to several hundred hospitality TVs simultaneously. The REACH functions are available only in **Standalone** mode. The REACH Server is sold separately. Refer to the REACH Server manual enclosed with the REACH Server product for more operating information.

Welcome Message

Hotel Option (MUTE > 1 > 1 > 9 > Select) > Logo/Message > Welcome Message

Welcome Message function displays a custom message on the TV every time it is turned on.

- Set **Welcome Message** to on to display the message when the TV is powered on.
- You can make the welcome message and edit it.
- You can edit the welcome message by using on screen keyboard in the **Edit Welcome Message** (**Hotel Option** > **Logo/Message** > **Edit Welcome Message**).
- Use the directional buttons on the remote control to enter the title and message, and select **Save**.

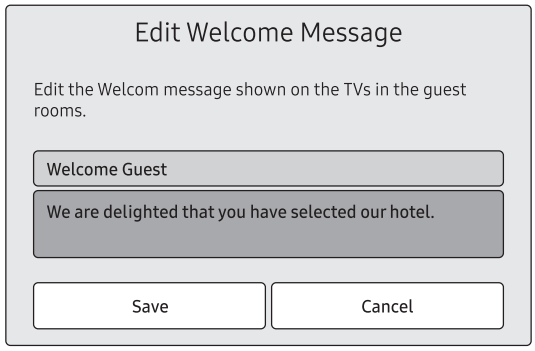

Hotel Logo

Hospitality Logo

Hotel Option (MUTE > 1 > 1 > 9 > Select) > Logo/Message > Hospitality Logo

Hospitality Logo function displays the Hotel's picture image when the TV is powered on.

- When you set **Hospitality Logo** to **AVI** / **BMP** / **BOTH**, **Hospitality Logo DL** and **Logo Display Time** are enabled.
- If there is a logo image stored in memory and the **Hospitality Logo** is **AVI** / **BMP** / **BOTH**, the logo image is displayed when the TV is turned on.
- The logo image is not displayed when set **Hospitality Logo** to off, even if the logo image has been loaded into the TV.

Logo Download

Hotel Option (MUTE > 1 > 1 > 9 > Select) > Logo/Message > Hospitality Logo DL

This option lets you download the logo image to the TV's memory from a USB device.

- The wait message appears while the image is being copied to the TV.
- The completed message appears when the copy operation finishes successfully.
- The failed message appears if the copy operation was unsuccessful.
- No USB appears if no USB device is connected.
- If there is no file to copy on the USB device or the file is in the wrong format, the message that there is no file appears.
- If message that there is no file appears and there is a logo file on the USB device, check the file format.
- Logo file format
  - TV Supports all file formats.
  - File name must be "samsung_image.*" and "samsung_video.*"
  - Maximum file size can be 50MB for Smart models.
  - The TV does not change the size or scale of the image.

USB Cloning

Hotel Option (MUTE > 1 > 1 > 9 > Select) > Cloning

The USB cloning function lets you download user-configured settings (**Picture**, **Sound**, **Channel**, and **Hotel Option**) from one TV to a USB device, and then upload these settings from the USB device to other TV sets. This lets you create a standard file of settings and distribute that standard file to all the TVs in your facility.

- After cloning, certain features are applied when the TV is turned on again.

Cloning TV to USB: Copies stored menu settings from a TV to a USB device

Hotel Option (MUTE > 1 > 1 > 9 > Select) > Cloning > Clone TV to USB

1. Insert a USB device into the USB port on the rear of the TV.
2. Enter the **Hotel Option** menu by pressing buttons in order. (MUTE > 1 > 1 > 9 > Select)
3. Press the up or down directional button to select **Clone TV to USB**, and press the **Select** button on the remote control.
4. The cloning message is displayed.

– The clone folder will be labeled **T-KTM2AKUCB**.

– The cloned values include the values on the guest side menu (**Brightness**, **Picture Size**, **Contrast**, etc.) and the **Hotel Option** menu.

Cloning USB to TV: Copies menu settings and channel data in a USB device to a TV

Shortcut: Turn the TV off, insert the USB device, turn the TV on, and then press the **Select** button on the remote control for 5 seconds.

To clone data to the TV using the Hotel Option menu, follow these steps:

1. Turn the TV off.
2. Insert the USB device into the USB port on the rear of the TV.
3. Turn the TV on.
4. Enter the **Hotel Option** menu by pressing buttons in order. (**MUTE** > **1** > **1** > **9** > **Select**)
5. Press the up or down directional button to select **Clone USB to TV**, and press the **Select** button on the remote control.
6. The message **Clone settings from USB to TV** is displayed. Press the **Select** button on the remote control.

– If there is no file to copy on the USB device or the message that there is no file apears, check the folder on your USB device.
– The folder name should be **T-KTM2AKUCB**.
– Tables that list the settings that are cloned in the **Hotel Option** menu begin on the next page.

Pre-condition for cloning (check point)

- Cloning should be done between same model (same SW version).
- Before cloning, all displays should be updated at the latest version (same SW version).

Settings Cloned in the Hotel Option Menu

- The menu items may not be supported depending on the models.

Menu Item		Sub Item	Cloned or not
Hospitality Mode		Standalone / Interactive	Yes
SI Vendor		Interactive mode : Samsung / OCC / MTI / Nstreams / Enseo / Cardinal / Guestek / SeaChange / MDC / Innvue Standalone mode : OFF / Smoovie / SSCP	Yes
Power On	Power On Channel	User Defined / Last Saved	Yes
	Power On Channel Num	***	Yes
	Power On Channel Type	ATV / DTV / CATV / CDTV / IPTV	Yes
	Power On Volume	User Defined / Last Saved	Yes
	Power On Volume Num	0~100	Yes
	Min Volume	0~100	Yes
	Max Volume	0~100	Yes
	Power On Source	TV / HDMI1 / HDMI2 / HDMI3 / AV / COMP / Last Saved	Yes
	Power On Option	Power On / Standby / Last Option	Yes
Channel	Channel Setup	—	No
	Channel Editor	—	No
	Channel Bank Editor	—	No
	Mixed Channel Map	ON / OFF	Yes
	Dynamic SI	ON / OFF	Yes
	MyChannel	ON / OFF	Yes
Menu OSD	Picture Menu Lock	ON / OFF	Yes
	Menu Display	ON / OFF	Yes
	Channel Menu Display	ON / OFF	Yes
	Panel Button Lock	Unlock / Lock / OnlyPower	Yes
Clock	Local Time	Standalone: Manual / Time Channel Interactive: Auto / Manual / Time Channel	Yes
	Timer Type	WakeUp / OnOff	Yes
	Time Channel Type	DTV / CDTV	Yes
	Time Channel Num	***	
	NTP Settings	***	No
Music Mode	Music Mode AV	ON / OFF	Yes
	Music Mode Comp.	ON / OFF	Yes
	Music Mode Backlight	ON / OFF	Yes
Remote Jack Pack	Priority AV	1~2	Yes
	Priority HDMI	1~2	Yes
	HDMI Option	HDMI1 / HDMI2 / HDMI3	Yes
	HDMI Music Mode	ON / OFF	Yes

Menu Item		Sub Item	Cloned or not
External Source	USB Pop-up Screen	Default / Automatic / Disable	Yes
	External Source Banner	ON / OFF	Yes
	Auto Source	ON / OFF	Yes
	Anynet+Return Source	Power On Src / Last Source / Each model source list (TV, HDMI1, HDMI2, etc.)	Yes
Bathroom Speaker	SubAmp Mode	0~2	Yes
	SubAmp Volume	0~32	Yes
Eco Solution	Power Saving Mode	OFF / Low / Medium / High	Yes
Logo / Message	Welcome Message	ON / OFF	Yes
	Edit Welcome Message	—	Yes
	Hospitality Logo	OFF / BMP / AVI / BOTH	Yes
	Hospitality Logo DL	—	Yes
	Logo Display Time	3 second / 5 second / 7 second	Yes
Cloning	Clone TV to USB	—	No
	Clone USB to TV	—	No
	Setting Auto Intialize	ON / OFF	Yes
Network	Network Setup	—	No
	Apps ID Setting	—	Yes
	Apps Setting	—	No
	Service Discovery	ON / OFF	Yes
	LAN OUT	ON / OFF	Yes
	VLAN ID	ON / OFF	Yes
	Solution VLAN ID	1~4094	Yes
	Device LAN ID	1~4094	Yes
	ARP Interval	2s / 5s / 10s / 30s / 60s / 120s / 180s / 600s / 1800s / 3600s	Yes
System Manager		—	No
Security	FactoryLock	ON / OFF	Yes
	Password Popup	ON / OFF	Yes
	Password Input	—	No
	Password Setting	—	Yes
	Password Reset	—	No
	Security Mode	ON / OFF	Yes
	USB	Enable / Disable	Yes
	HDMI	Enable / Disable	Yes
DRM	DRM Mode	OFF / LYNK DRM / Pro:idiom / LYNK DRM, PI	Yes
	PI AES Data	0xD279	No

Menu Item			Sub Item	Cloned or not
System	Self Diagnosis for TV		—	No
	Self Diagnosis for HTV	PI DTV Channel Key Loss	Sucess / Failure	
		STB SI Vendor Setting	Si Name Sucess / Failure	No
		Bathroom AMP	Sucess / Failure	
		RTC	Sucess / Failure	
	Software Update		—	No
	Sound Bar Out		ON / OFF	Yes
	Contact Samsung		—	No
	Standby LED		ON / OFF	Yes
	Boot Logo		ON / OFF	Yes
	TV Reset		—	No
Home Menu	Home Menu Display		ON / OFF	Yes
	Home Menu Editor		—	Yes
	Home Menu Auto Start		ON / OFF	Yes
REACH Solution	REACH RF Mode		ON / OFF	Yes
	REACH IP Mode		ON / OFF	Yes
	Server URL Setting		—	Yes
	REACH Channel		***	Yes
	Group ID		ALL, 1 - 511	No
	REACH Update Time		OFF / 12:00 am / 2:00 am / 12:00 pm / 2:00 pm	Yes
	REACH Update Immediate		ON / OFF	Yes
	REACH Config Version		—	No
H.Browser Solution	H.Browser Mode		ON / OFF	Yes
	H.Browser Vendor		Others / Sonifi	Yes
	URL Launcher Setting		—	Yes
HMS	HMS Mode		ON / OFF	Yes
	HMS Server URL Setting		—	Yes
	HMS Gateway Role		Master / Slave	Yes
	HMS HalfTicker Display		ON / OFF	Yes
Virtual Standby	Virtual Standby Mode		ON / OFF	Yes
	Reboot Time		OFF / 5 / 15 / 30 / 60	
Room Number			—	No

Setting Auto Initialize

Hotel Option (MUTE > 1 > 1 > 9 > Select) > Cloning > Setting Auto Initialize

When you clone settings from one TV to another, you clone both the guest side menu and hotel side menu settings: **Picture**, **Sound**, **Channel**, and **Hotel Option** menu. This lets you set nearly all of the menu values on your hospitality TVs to the same, standard settings. If you allow guests access to the guest side menus, for example the **Picture** menu, they can change the settings in those menus so they are no longer standard. If you set the **Setting Auto Initialize** function to on the TV automatically restores (initializes) any guest-side menu values to the cloned, standard values when the TV is turned off and then turned on again. Note that **Setting Auto Initialize** works on cloned guest side menu values only. Settings which have not been cloned are ignored.

The table below lists the settings that are restored to their cloned values when you set the **Setting Auto Initialize** function to on.

- The menu items may not be supported depending on the models.

Menu Item			
Picture	Picture Mode		
	Picture Size Settings	Picture Size	
		Fit to Screen	
		Zoom and Position	
	Expert Settings	Backlight	
		Brightness	
		Contrast	
		Sharpness	
		Color	
		Tint (G/R)	
		Apply Picture Settings	
		Digital Clean View	
		Auto Motion Plus Settings	Auto Motion Plus
			Judder Reduction
			LED Clear Motion
		Contrast Enhancer	
		Film Mode	
		Color Tone	

Menu Item				
Picture	Expert Settings	White Balance	2 Point	R-Gain
				G-Gain
				B-Gain
				R-Offset
				G-Offset
				B-Offset
			20 Point Settings	20 Point
				Interval
				Red
				Green
				Blue
		Gamma		
		HLG		
		ST.2084		
		BT.1886		
		RGB Only Mode		
		Color Space Settings	Color Space	
			Color	
			Red	
			Green	
			Blue	
Sound	Sound Output			
	Sound Mode			
	Expert Settings	Balance		
		Equalizer		
		HDMI Input Audio Format		
		Digital Output Audio Format		
		Audio Delay		
		Auto Volume		
		Sound Feedback		

Menu Item				
Broadcasting	Audio Options	Preferred Language		
General	System Manager	Time	Clock	Clock Mode
				DST
				Time Zone
			Sleep Timer	
		Language		
		Auto Protection Time		
	External Device Manager	Anynet+ (HDMI-CEC)		
		Game Mode		
		HDMI UHD Color		
		HDMI Black Level		
		Input Device Manager	Keyboard Language	
			Keyboard Type	
	Eco Solution	Ambient Light Detection		
		Minimum Backlight		
		Power Saving Mode		
		Motion Lighting		
		Auto Power Off		
	Accessibility	High Contrast		
		Grayscale		
		Enlarge		

Updating the TV’s Software

DO NOT turn off the TV’s power until the update is complete. The TV will turn off and on automatically after completing the software update. Video and audio settings will be reset to their defaults after a software update. We recommend you clone the TV's settings so that you can easily reset them after the upgrade.

- For more information about the USB cloning function, refer to page 40.

Updating through a USB device

To update the TV's software, follow these steps:

1. Insert a USB flash dirve containing the software update file into the USB port of the TV.
2. Run **Update Now**. (**MENU** > **Support** > **Software Update** > **Update Now**)
3. The TV displays a pop-up message that checks for the updated version.
4. Move the focus to **OK**, and then press the **Select** button on the remote control.

– Please be careful to not disconnect the power or remove the USB flash dirve while upgrades are being applied. The TV will turn off and turn on automatically after completing the SW upgrade. Please check the SW version after the upgrades are complete.

08 Using a Multi Code Remocon

A Multi Code Remocon is a special remote which is designed to control multiple TVs. This function is useful where there is more than one TV in a location.
You can control up to 10 TVs with a different ID code of each remote with no conflicts between the TVs. ID numbers are displayed on each TV's OSD.
The Initial ID code for each TV is **0**.

- You can set and reset the ID code in analog TV mode or PC mode. (Not available in DTV mode.)
- You can set the ID code to any digit from **0** to **9**.
- To set a TV's ID code, follow these steps:

1. Aim the remote at the TV, and then press the **MUTE** button and the **RETURN** button simultaneously for more than 7 seconds. When you stop pressing the buttons, the TV displays the current ID in the middle of the screen and a message appears.
2. Press the number on the remote you want to assign to the TV. The TV displays a message.
3. After you see the message, if you press **1**, the TV and Remote will be set to ID code **1**.

– The TV can then only be controlled by a remote which has the same ID code **1**.
– To reset the ID code, press the **MUTE** button and the **EXIT** button simultaneously for more than 7 seconds. When you stop pressing the buttons, the ID codes of the TV and Remote are reset to **0**.

09 Setting the Soundbar

Samsung Soundbar and Hospitality TV

- Samsung Soundbar and hospitality TVs support the HDMI ARC feature If you connect a compatible Samsung Soundbar to a compatible Samsung hospitality TV using a single HDMI cable, guests can listen to the TV's sound through the Soundbar.
- **Sound bar Out** in **Hotel Option** menu makes you control to where the TV sound is outputted when the TV is turned on.
  - **Hotel Option** (MUTE > 1 > 1 > 9 > **Select**) > **System** > **Sound Bar Out**
- If **Sound bar Out** set to on, the TV sound is automatically outputted in the Soundbar device only whenever TV is turned on.
- If **Sound bar Out** set to off, the TV sound is automatically outputted in the TV speaker only whenever TV is turned on.
- Use the Samsung Soundbar that supports the ARC function.

Setting the Soundbar to Hotel Mode

1. Set the following options in **Hotel Option** (MUTE > 1 > 1 > 9 > **Select**):
   - **System** > **Sound Bar Out** > **ON**
   - **Power On** > **Power On Volume** > **User Defined**
   - **Power On** > **Power On Volume Num** > set greater than **0**
   - **Power On** > **Max Volume** > set greater than **0**
2. Connect an HDMI cable from the HDMI out port of the Soundbar to the **HDMI IN (ARC)** port on the TV.
3. After the Soundbar is connected to the TV, when the TV turns on, the Soundbar automatically detects the TV, and then automatically switches to Hotel Mode.

Soundbar features in Hotel mode

- Power on / off is synchronized with the TV.
- HDMI-CEC defaults set to on
- Avaiable only through the HDMI out port.
- Disables the "Input mode" key on the VFD to prevent unexpected audio-source changes.
- Acquires adjustable **Power On** and **Max Volume** settings from the TV's **Hotel Option** menu. However Soundbar's **Power On Volume** and **Max Volume** values are set to half of **Power On Volume** and **Max Volume** settings in the TV's **Hotel Option** menu.
  - If the TV's **Power On Volume** = **20** and **Max Volume** = **90**, then Soundbar's **Power On Volume** = **10** and **Max Volume** = **45**.
- To use **Voice Guide** while an external device is connected to the **DIGITAL AUDIO OUT (OPTICAL)** or **HDMI IN (ARC)** terminal, be sure to select **PCM** or **Dolby Digital** at **MENU** > **Sound** > **Expert Settings** > **Digital Output Audio Format**.
  - The audio formats may differ depending on the external device.

10 Editing Channels

Channel Bank Editor (Smoovie TV Only)

Channel Bank Editor in conjunction with the SMOOVIE remote lets you control the channels guests have access to. **Channel Bank Editor** provides three Banks of channels and lets you select which channels will be available from each bank. SMOOVIE remotes have installable Bank Cards which correspond to the channel banks in the **Channel Bank Editor**. The remotes only allow access to channels in the channel bank that correspond to the installed card. Consequently, the channels a guest can access depend on the Bank Card installed in their SMOOVIE remote.

Setting the Channel Bank Editor under Standalone Mode

1. Press **MUTE** > **1** > **1** > **9** > **Select** buttons on the remote control to enter the **Hotel Option** menu.
2. Go to **SI vendor**, and then select **Smoovie**.
3. Go to **Channel** > **Channel Bank Editor**. Press the **Select** button on the remote control.
4. Enter the **Channel Bank Editor**. Edit the Channel Bank.
   - **Bank1** (Free channel): Select the channels that will be accessible when a remote doesn't have a card.
   - **Bank2** (Family Card - Green): Select the channels that will be accessible when a remote has a GREEN CARD.
   - **Bank3** (Adult Card - Red): Select the channels that will be accessible when a remote has a RED CARD.

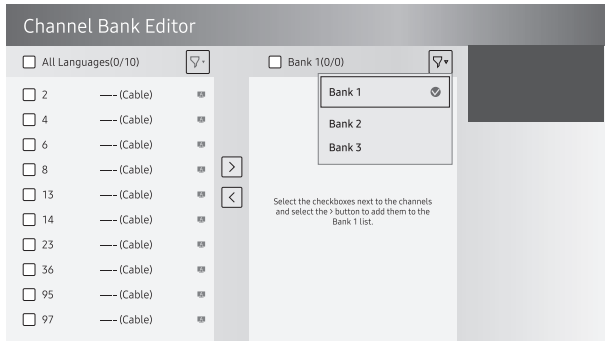

Information About SMOOVIE Remote Controls

- If you select **SMOOVIE** as the **SI vendor**, you should also use SMOOVIE remotes in your facility.
- Guests with remotes that do not have a card can only view channels from **Bank 1**.
- Guests using the numeric button on the remote control to change channels can only view channels from **Bank 1**.
- Guests with remotes that have Green or Red cards must use the channel up or down directional buttons to change channels.
- Guests can only see channels from the **Bank 1** channel list In the **Guide** or the **Channel List**.

Smoovie Set Up Sequence

1. Complete the Initial Setup.
2. The TV displays the **Hotel Option** menu.
   - If the Initial Setup is already done, enter the **Hotel Option** menu. (**MUTE** > **1** > **1** > **9** > **Select**)
3. Select the channel type. (**Power On** > **Power On Channel Type**)
   - **ATV** or **DTV** for Air
   - **CATV** or **CDTV** for cable
4. Select **Smoovie** in the **SI Vendor** menu.
5. Select **Channel Setup** (**Channel** > **Channel Setup**).
6. Select **Air** or **Cable**.
7. Set up channels in the **Channel Bank Editor** (**Channel** > **Channel Bank Editor**).
8. Turn off the TV, and then turn it on again. Then guests can use the TV.

Using Channel Editor

Hotel Option (**MUTE** > **1** > **1** > **9** > **Select**) > **Channel** > **Channel Editor**

Using **Channel Editor** you can edit the channels stored in the TV's memory.

- Change the channel numbers and names, edit the channel language and channel genre and delete channels.
  - This function is enabled when **My Channel** set to **On** in **Hotel Option** menu. (**Hotel Option** (**MUTE** > **1** > **1** > **9** > **Select**) > **Channel** > **My Channel**)
- Apply the **Screen Off** to channels you select. The **Screen Off** blanks out the video from a channel and outputs only the sound while displaying a screen off icon on the screen.
- **Channel Editor** also lets you view information about each channel easily, without your having to display each channel directly.

General Steps for Using the Channel Editor in Standalone Mode

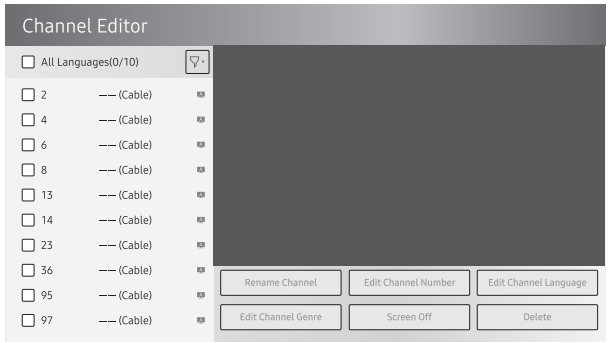

1. Run **Channel Setup** (**Channel** > **Channel Setup**) in the **Hotel Option** menu.
2. Enter **Channel Editor** (**Channel** > **Channel Editor**) in the **Hotel Option** menu.
3. On a piece of paper, compile a list of channels you want to have, arranged in the order you want.
4. Based on the list created in Step 3, rearrange the channels and edit the channel names.
5. Press the **EXIT** or **RETURN** button to exit.

Editing the Channel Number

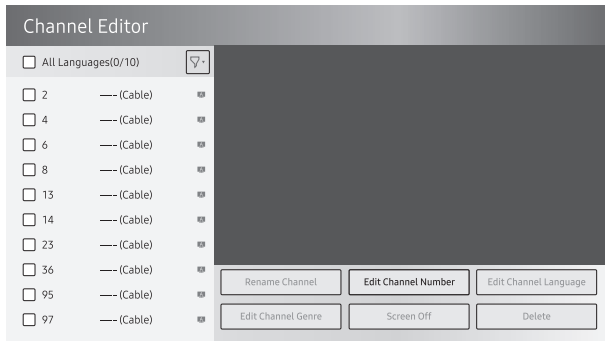

Change the channel number of a channel you select. To change a channel number, follow these steps:

1. Select a channel on the **Channel Edit** screen.
2. Use the directional buttons on the remote control, move the focus to **Edit Channel Number**, and **Select** button.
3. Use the up or down directional buttons on the remote control to change the channel number.
4. Select **OK** when done, and then press the **Select** button on the remote contorl.
   - When you change the channel number, the channel information is updated automatically.

Rename the Channel

Change the name of a channel you select. To change the name of a channel, follow these steps:

1. Select a channel on the **Channel Edit** screen.
2. Use the directional buttons on the remote control, move the focus to **Rename Channel**, and **Select** button.
3. Use the on-screen keyboard that appears to enter the new name for the channel. Use the directional buttons on the remote control, select a letter or number, and then press **Select** button. Repeat for each letter or number you want to select.
4. When finished, select **Done** on the bottom of the screen, and then press the **Select** button on the remote control.

Assigning the Channel Number to the external device

The external device source of the TV are displayed in the last page of the **Channel Editor** menu as shown below.

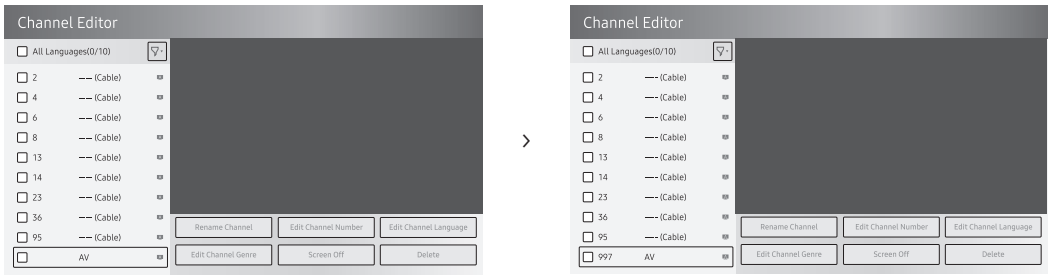

1. Select a external device source on the **Channel Edit** screen.
2. Use the directional buttons on the remote control, move the focus to **Edit Channel Number**, and **Select** button.
3. Use the up or down directional buttons on the remote control to assign the channel number.
4. Select **OK** when done, and then press the **Select** button on the remote contorl.

– Once you assign a channel number to an external device, you can enter the external device without opening the TV source menu.

11 Anti-theft Kensington Lock

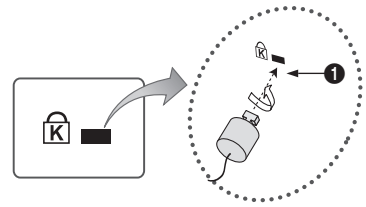

The Kensington Lock is a device you can use to physically fix a TV to a location when you use it in a public place. The appearance and locking method may differ from the illustration at right, depending on the manufacturer. Refer to the manual provided with the Kensington Lock for additional information on proper use.

- The Kensington Lock slot is only available on the HG43NT690U model.

The Kensington Lock is not supplied by Samsung.

- Please find the icon on the rear of the TV. A Kensington slot is beside the icon.

To lock the product, follow these steps:

1. Wrap the Kensington lock cable around a large, stationary object such as desk or chair.
2. Slide the end of the cable with the lock attached through the looped end of the Kensington lock cable.
3. Insert the locking device into the Kensington slot on the product ❶.
4. Lock the lock.

– These are general instructions. For exact instructions, see the User manual supplied with the locking device.
– The locking device has to be purchased separately.
– The location of the Kensington slot may be different depending on the TV model.

12 Specifications and Other Information

Specifications

Model Name	HG43NT690U	HG50NT690U
Display Resolution	3840 x 2160	3840 x 2160
Screen Size Diagonal Measured Diagonally	 43″ Class 42.5 inches	 50″ Class 49.5 inches
Sound (Output)	20 W	20 W
Stand Swivel (Left / Right)	20° / 60° / 90°	20° / 60° / 90°
Dimensions (W x H x D) Body With Stand	 37.9 x 22.0 x 2.3 inches (963.9 x 558.9 x 59.6 mm) 37.9 x 24.1 x 8.9 inches (963.9 x 610.9 x 226.5 mm)	 44.0 x 25.4 x 2.4 inches (1116.8 x 644.2 x 59.9 mm) 44.0 x 27.4 x 8.9 inches (1116.8 x 696.8 x 226.5 mm)
Weight Without Stand With Stand	 19.0 lbs (8.6 kg) 26.0 lbs (11.8 kg)	 26.2 lbs (11.9 kg) 33.3 lbs (15.1 kg)
Model Name	HG55NT690U	HG65NT690U
Display Resolution	3840 x 2160	3840 x 2160
Screen Size Diagonal Measured Diagonally	 55″ Class 54.6 inches	 65″ Class 64.5 inches
Sound (Output)	20 W	20 W
Stand Swivel (Left / Right)	20° / 60° / 90°	0°
Dimensions (W x H x D) Body With Stand	 48.4 x 27.8 x 2.4 inches (1230.5 x 707.2 x 59.9 mm) 48.4 x 29.9 x 8.9 inches (1230.5 x 759.8 x 226.5 mm)	 57.1 x 32.7 x 2.4 inches (1449.4 x 830.3 x 59.9 mm) 57.1 x 35.7 x 11.1 inches (1449.4 x 906.6 x 282.1 mm)
Weight Without Stand With Stand	 31.5 lbs (14.3 kg) 38.6 lbs (17.5 kg)	 46.5 lbs (21.1 kg) 47.2 lbs (21.4 kg)

Model Name	HG75NT690U
Display Resolution	3840 x 2160
Screen Size Diagonal Measured Diagonally	 75″ Class 74.5 inches
Sound (Output)	20 W
Stand Swivel (Left / Right)	0°
Dimensions (W x H x D) Body With Stand	 65.9 x 37.7 x 2.4 inches (1673.2 x 958.2 x 59.9 mm) 65.9 x 41.3 x 13.4 inches (1673.2 x 1047.9 x 341.1 mm)
Weight Without Stand With Stand	 68.1 lbs (30.9 kg) 69.0 lbs (31.3 kg)

Environmental Considerations

Operating Temperature	50°F to 104°F (10°C to 40°C)
Operating Humidity	10% to 80%, non-condensing
Storage Temperature	-4°F to 113°F (-20°C to 45°C)
Storage Humidity	5% to 95%, non-condensing

Notes

- This device is a Class B digital apparatus.
- Design and specifications are subject to change without prior notice.
- For information about the power supply, and more information about power consumption, refer to the information on the label attached to the product.
  - On most models, the label is attached to the back of the TV. (On some models, the label is inside the cover terminal.)
- Your TV and its accessories may look different than the product images presented in this manual, depending on the model.
- All drawings are not necessarily to scale. Some dimensions are subject to change without prior notice. Refer to the dimensions before installing your TV. Not responsible for typographical or printed errors.
- Recommended hours of use per day of this product is under 8 hours. If the product is used for longer than 8 hours a day, the warranty may be void.

Decreasing power consumption

When you shut the TV off, it enters Standby mode. In Standby mode, it continues to draw a small amount of power. To decrease power consumption, unplug the power cord when you don't intend to use the TV for a long time.

Supported Resolutions for UHD Input Signals

- Resolution: 3840 x 2160p, 4096 x 2160p
  - An HDMI connection with **HDMI UHD Color** set to **Off** supports up to UHD 50P/60P 4:2:0 input signals, while an HDMI connection with **HDMI UHD Color** set to **On** supports up to UHD 50P/60P 4:4:4 and 4:2:2 input signals.
  - **MENU** > **General** > **External Device Manager** > **HDMI UHD Color**

If HDMI UHD Color is set to Off

Frame rate (fps)	RGB	YCbCr 4:4:4	YCbCr 4:2:2	YCbCr 4:2:0
24 / 25 / 30	O	O	O	-
50 / 60	-	-	-	O

If HDMI UHD Color is set to On

Frame rate (fps)	RGB	YCbCr 4:4:4	YCbCr 4:2:2	YCbCr 4:2:0
24 / 25 / 30	O	O	O	-
50 / 60	O	O	O	O

Display Resolution

When you use your TV as a computer monitor, you can also select one of the standard resolutions listed in the Resolution column. The TV will automatically adjust to the resolution you choose.

Mode	Resolution	Display format	Horizontal frequency (KHz)	Vertical frequency (Hz)	Clock frequency (MHz)	Polarity (horizontal / vertical)
IBM	720 x 400	70 Hz	31.469	70.087	28.322	-/+
MAC	640 x 480	67 Hz	35.000	66.667	30.240	-/-
	832 x 624	75 Hz	49.726	74.551	57.284	-/-
	1152 x 870	75 Hz	68.681	75.062	100.000	-/-
VESA DMT	640 x 480	60 Hz	31.469	59.940	25.175	- / -
	640 x 480	72 Hz	37.861	72.809	31.500	- / -
	640 x 480	75 Hz	37.500	75.000	31.500	- / -
	800 x 600	60 Hz	37.879	60.317	40.000	+ / +
	800 x 600	72 Hz	48.077	72.188	50.000	+ / +
	800 x 600	75 Hz	46.875	75.000	49.500	+ / +
	1024 x 768	60 Hz	48.363	60.004	65.000	- / -
	1024 x 768	70 Hz	56.476	70.069	75.000	- / -
	1024 x 768	75 Hz	60.023	75.029	78.750	+ / +
	1152 x 864	75 Hz	67.500	75.000	108.000	+ / +
	1280 x 720	60 Hz	45.000	60.000	74.250	+ / +
	1280 x 800	60 Hz	49.702	59.810	83.500	- / +
	1280 x 1024	60 Hz	63.981	60.020	108.000	+ / +
	1280 x 1024	75 Hz	79.976	75.025	135.000	+ / +
	1366 x 768	60 Hz	47.712	59.790	85.500	+ / +
	1440 x 900	60 Hz	55.935	59.887	106.500	- / +
	1600 x 900RB	60 Hz	60.000	60.000	108.000	+ / +
	1680 x 1050	60 Hz	65.290	59.954	146.250	- / +
	1920 x 1080	60 Hz	67.500	60.000	148.500	+ / +
	1920 x 1200	60 Hz	74.556	59.885	193.250	- / +

Mode	Resolution	Display format	Horizontal frequency (KHz)	Vertical frequency (Hz)	Clock frequency (MHz)	Polarity (horizontal / vertical)
CEA-861	720(1440) x 576i	50 Hz	15.625	50.000	27.000	- / -
	720(1440) x 480i	60 Hz	15.734	59.940	27.000	- / -
	720 x 576	50 Hz	31.250	50.000	27.000	- / -
	720 x 480	60 Hz	31.469	59.940	27.000	- / -
	1280 x 720	50 Hz	37.500	50.000	74.250	+ / +
	1280 x 720	60 Hz	45.000	60.000	74.250	+ / +
	1920 x 1080i	50 Hz	28.125	50.000	74.250	+ / +
	1920 x 1080i	60 Hz	33.750	60.000	74.250	+ / +
	1920 x 1080	24 Hz	27.000	24.000	74.250	+ / +
	1920 x 1080	25 Hz	28.125	25.000	74.250	+ / +
	1920 x 1080	30 Hz	33.750	30.000	74.250	+ / +
	1920 x 1080	50 Hz	56.250	50.000	148.500	+ / +
	1920 x 1080	60 Hz	67.500	60.000	148.500	+ / +
	3840 x 2160	24 Hz	54.000	24.000	297.000	+ / +
	3840 x 2160	25 Hz	56.250	25.000	297.000	+ / +
	3840 x 2160	30 Hz	67.500	30.000	297.000	+ / +
	3840 x 2160	50 Hz	112.500	50.000	594.000	+ / +
	3840 x 2160	60 Hz	135.000	60.000	594.000	+ / +
	4096 x 2160	24 Hz	54.000	24.000	297.000	+ / +
	4096 x 2160	25 Hz	56.250	25.000	297.000	+ / +
	4096 x 2160	30 Hz	67.500	30.000	297.000	+ / +
	4096 x 2160	50 Hz	112.500	50.000	594.000	+ / +
	4096 x 2160	60 Hz	135.000	60.000	594.000	+ / +
HDMI	3840 x 2160	30 Hz	67.500	30.000	297.000	+ / +
	3840 x 2160	25 Hz	56.250	25.000	297.000	+ / +
	3840 x 2160	24 Hz	54.000	24.000	297.000	+ / +
	4096 x 2160	24 Hz	54.000	24.000	297.000	+ / +

- The interlaced mode is not supported.
- The set might operate abnormally if you select a non-standard video format.
- Separate and Composite modes are supported. SOG (Sync On Green) is not supported.

Read Before Using the Internet Function

Read this information before using the Internet function.

- File download is not supported.
- The **Internet** function may not be able to access certain websites, including websites operated by certain companies.
- The TV does not support playback of flash videos.
- E-commerce for online purchases is not supported.
- ActiveX is not supported.
- Only a limited number of fonts are supported. Certain symbols and characters may not be displayed properly.
- The response to remote commands and the resulting on-screen display may be delayed while a web page is loading.
- Loading a web page may be delayed or suspended completely depending on the status of the participating systems.
- Copy and paste operations are not supported.
- When composing an email or a simple message, certain functions such as the font size and color selection may not be available.
- There is a limit to the number of bookmarks and the size of the log file that can be saved.
- The number of windows that can be opened concurrently is limited.
- Web browsing speed will differ with the network environment.
- Browsing history is saved from latest to oldest, with the oldest entries being overwritten first.
- Depending on the types of video/audio codecs supported, you may not be able to play certain HTML 5 video and audio files.
- Video sources from PC-optimized streaming service providers may not play properly on our proprietary **Internet** browser.

Dimensions

Front view / Side view

The displayed image may differ from your TV, depending on the model.

- 43″

(Unit: inches)

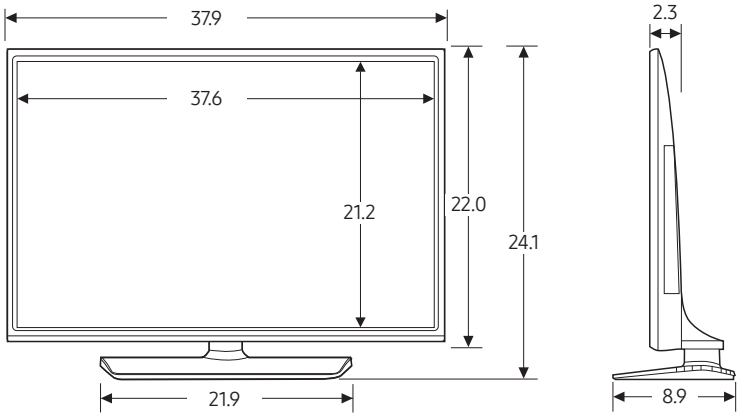

- 50″

(Unit: inches)

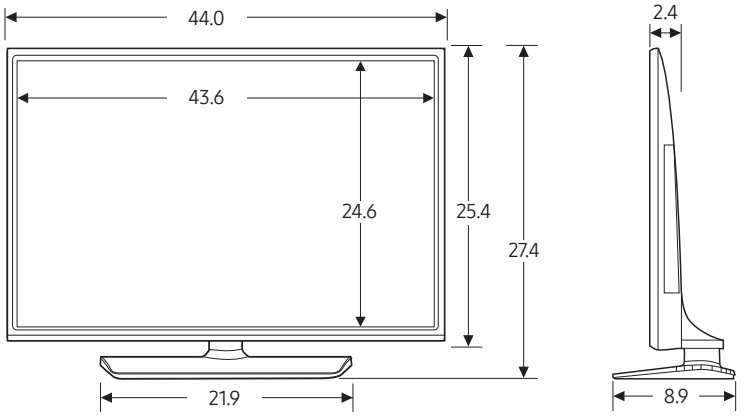

- 55″

(Unit: inches)

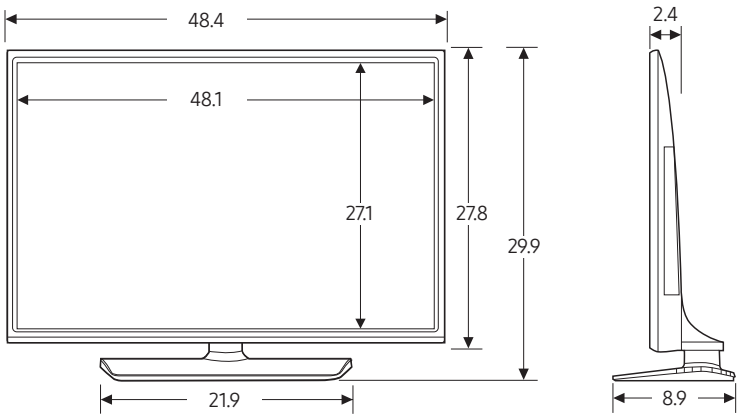

- 65″

(Unit: inches)

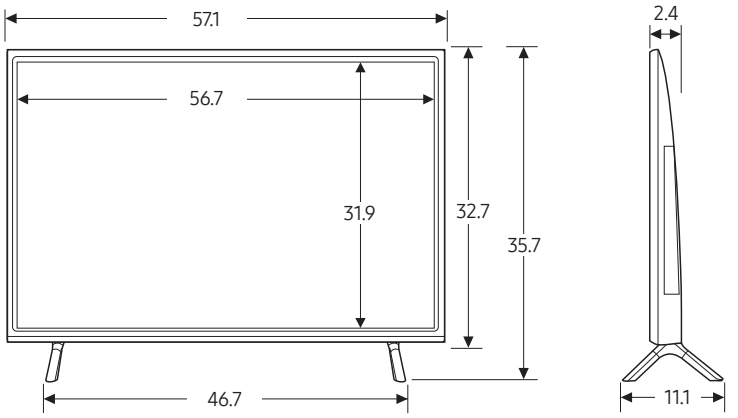

- 75″

(Unit: inches)

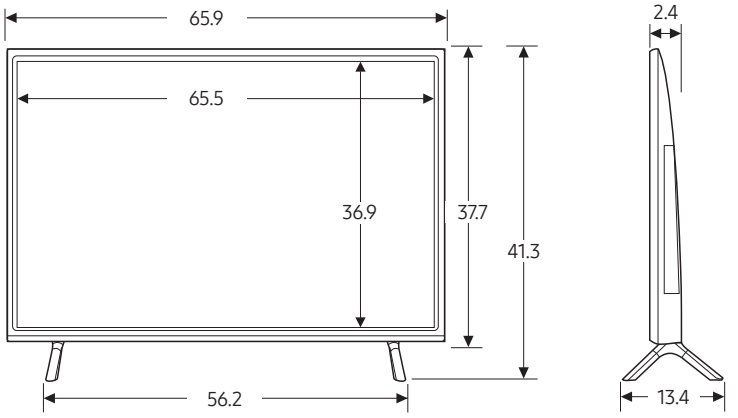

Jack panel detail / Rear view

Detailed dimensions can be checked at Displaysolutions.samsung.com.

Base Stand detail

The displayed image may differ from your TV, depending on the model.

- 43″

(Unit: inches)

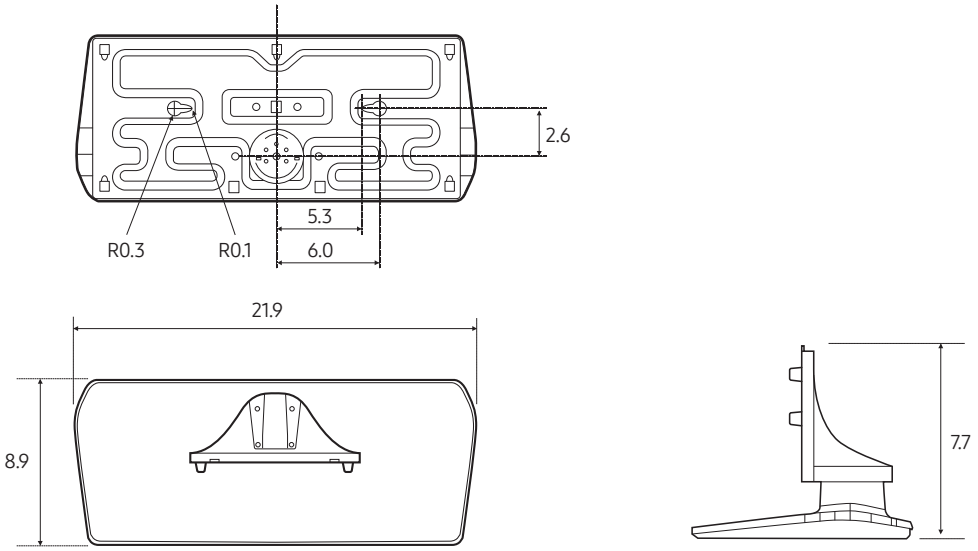

- 50″-55″

(Unit: inches)

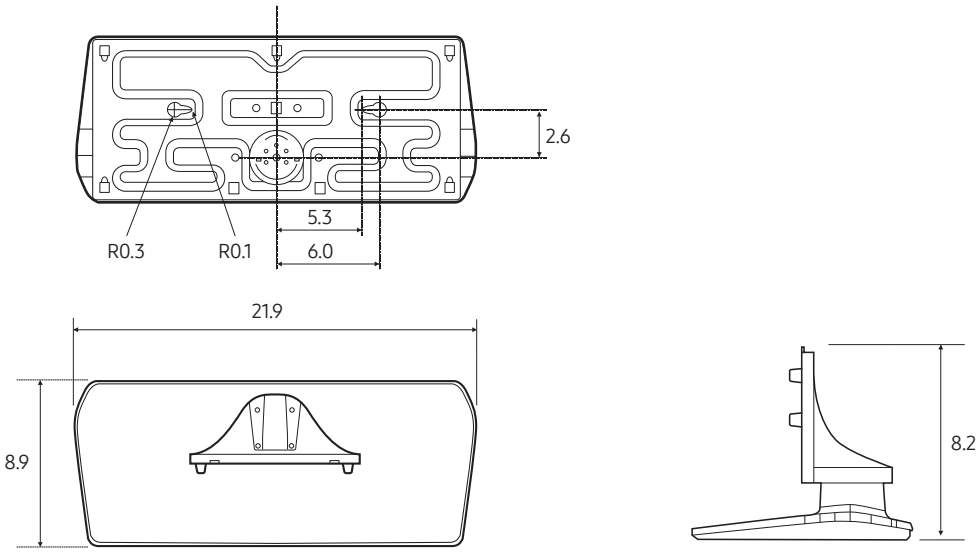

- 65″

(Unit: inches)

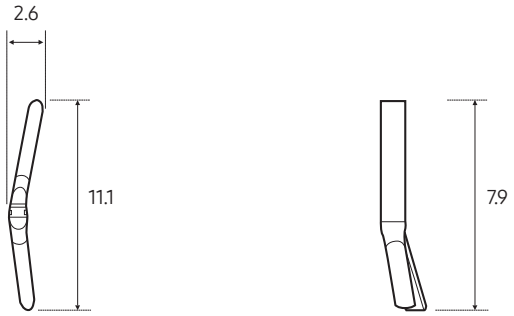

- 75″

(Unit: inches)

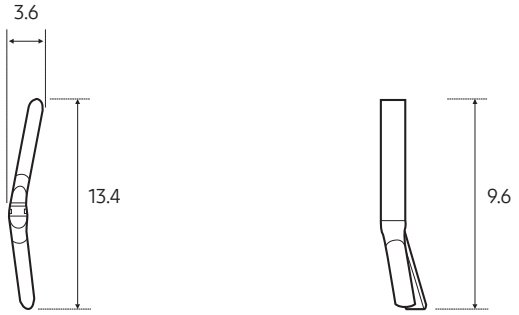

- NOTE: All drawings are not necessarily to scale. Some dimensions are subject to change without prior notice. Refer to the dimensions prior to performing installation of your TV. Not responsible for typographical or printed errors.

Licenses

DOLBY AUDIO™	Manufactured under license from Dolby Laboratories. Dolby, Dolby Audio, Pro Logic, and the double-D symbol are trademarks of Dolby Laboratories.
HEVC Advance™ Covered by Patents at patentlist.hevcadvance.com	THIS PRODUCT IS SOLD WITH A LIMITED LICENCE AND IS AUTHORISED TO BE USED ONLY IN CONNECTION WITH HEVC CONTENT THAT MEETS EACH OF THE THREE FOLLOWING QUALIFICATIONS: (1) HEVC CONTENT ONLY FOR PERSONAL USE; (2) HEVC CONTENT THAT IS NOT OFFERED FOR SALE; AND (3) HEVC CONTENT THAT IS CREATED BY THE OWNER OF THE PRODUCT. THIS PRODUCT MAY NOT BE USED IN CONNECTION WITH HEVC ENCODED CONTENT CREATED BY A THIRD PARTY, WHICH THE USER HAS ORDERED OR PURCHASED FROM A THIRD PARTY, UNLESS THE USER IS SEPARATELY GRANTED RIGHTS TO USE THE PRODUCT WITH SUCH CONTENT BY A LICENSED SELLER OF THE CONTENT. YOUR USE OF THIS PRODUCT IN CONNECTION WITH HEVC ENCODED CONTENT IS DEEMED ACCEPTANCE OF THE LIMITED AUTHORITY TO USE AS NOTED ABOVE.
HDMI™ HIGH-DEFINITION MULTIMEDIA INTERFACE	The terms HDMI and HDMI High-Definition Multimedia Interface, and the HDMI Logo are trademarks or registered trademarks of HDMI Licensing LLC in the United States and other countries.

Open Source License Notice

Open Source used in this product can be found on the following webpage. (http://opensource.samsung.com)

SAMSUNG

Contact SAMSUNG WORLD WIDE

If you have any questions or comments relating to Samsung products, please contact the Samsung service center.

Samsung Hospitality Hotline	1-866-sam4biz (US)
	1-800-749-0205 (CANADA)
	800-1488-747 (MEXICO)

Web site: http://www.samsung.com/us/business

© 2020 Samsung Electronics Co., Ltd. All rights reserved.

BN81-20342A-03