NMPRO-M21

SPECIFICATIONS

*Please note: The inch sizes stated are just an indication, combined with the weight and VESA sizes. The maximum weight and VESA size are absolute restrictions for the products and should not be exceeded.





NMPRO-M21

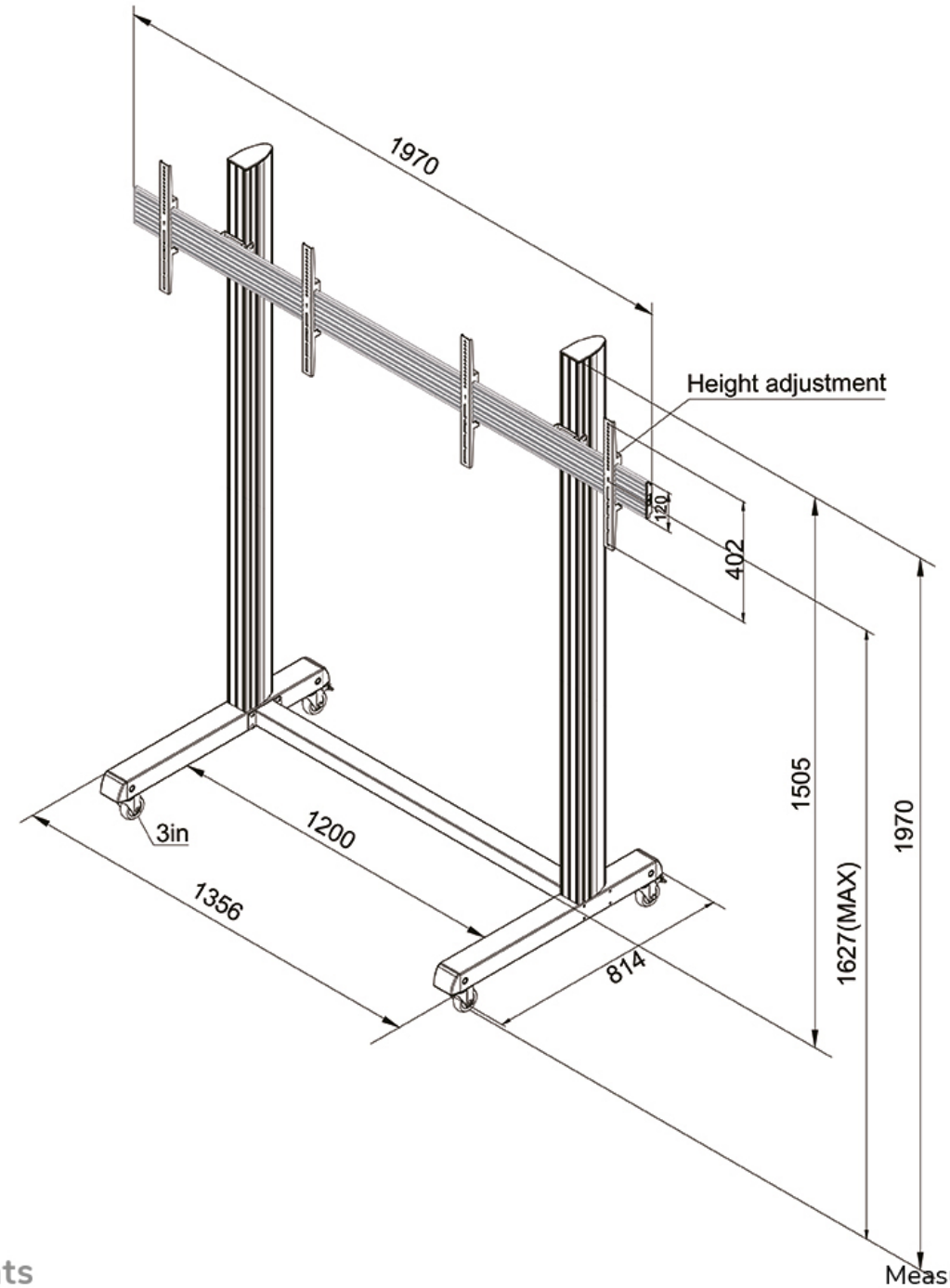
1970
Height adjustment
120
402
1505
1627(MAX)
1970
3in
1200
1356
814
Neomounts
Measuring unit: mm