WSFE 2B19 UK

12NC: 859991551950

GTIN (EAN) code: 8003437232862

Whirlpool
SENSING THE DIFFERENCE



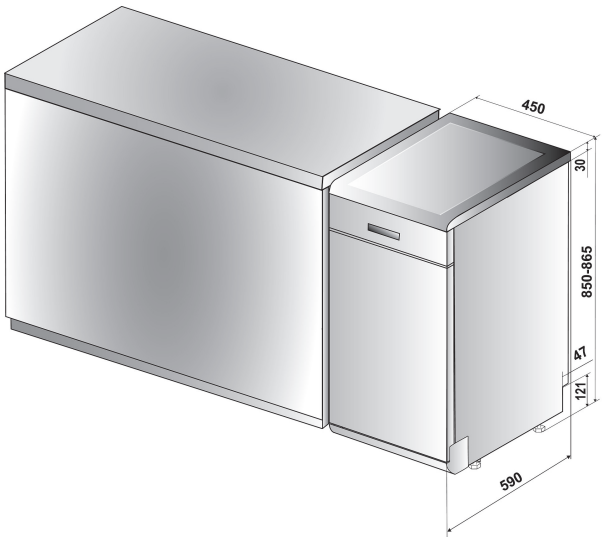

- Installation Type: Free-standing
- Energy class A+
- 10 place settings
- Model only 45 cm wide
- Noise level: 49 dB(A)
- 11.5 L per cycle (3220 L per year)
- Autoclean filter
- Start delay 1-8 h
- Adjustable upper rack
- Cutlery basket
- Tablet
- Intensive 65ºC
- Prewash
- Express
- Hot water connection
- Eco 50°C
- 10 place settings and 5 programs

Whirlpool dishwasher: white color, slimline - WSFE 2B19 UK

This Whirlpool Dishwasher features: white color. A+ energy efficiency class. Adjustable feet, for perfect stability on uneven floors and surfaces. Superb cleaning performance, for ideal washing results. Outstanding drying performance, providing excellent results.

Start Delay
Tailored for you. The Start Delay option allows you to set the Dishwasher to begin its cycle whenever most convenient for you, saving you both time and energy.

Upper rack removability
Removable upper rack. Your Dishwasher's removable upper rack allows you to create extra space when needed, as well as fit unusually-shaped items, effortlessly.

Upper rack adjustability
Adjustable upper rack. Your Dishwasher's adjustable upper rack allows you to create extra space when needed, as well as fit unusually-shaped items, effortlessly.

10 Place Settings
All the space you need. This Whirlpool Dishwasher provides 10 versatile place settings, so you can enjoy all the space you need, always.

Energy class A+
Greater energy efficiency. With its A+ energy rating, this Whirlpool appliance will allow you to enjoy both ideal performance and excellent energy consumption.

External water protection
This Whirlpool Dishwasher includes an external water protection feature, integrated in the supply pipe, that protects from water flooding in case of an unexpected malfunction.

Stainless steel interior
The stainless steel interior of the Whirlpool dishwasher ensures sparkling dishes and clean interior

Tablet option
Tailored for you. Choose the washing method you prefer. The Tablet option allows you to select a cycle specifically designed for tablet detergents, so you can enjoy ideal results, always.

FlexiSpace
Design your space. FlexiSpace's modular baskets allow you to arrange items freely and easily inside the dishwasher cavity.

WSFE 2B19 UK

12NC: 859991551950

GTIN (EAN) code: 8003437232862

Whirlpool
SENSING THE DIFFERENCE

MAIN FEATURES

Construction type	Free-standing
Installation type	Free-standing
Type of control	Electronic
Type of control settings	-
Removable work top	Yes
Door decor panel	N/A
Main colour of product	White
Electrical connection rating (W)	1900
Current (A)	13
Voltage (V)	220-240
Frequency (Hz)	50
Length of Electrical Supply Cord (cm)	130
Plug type	UK
Length inlet hose (cm)	155
Length outlet hose (cm)	150
Adjustable plinth	No
Height of removable worktop (mm)	0
Adjustable feet	Yes - all
Height of the product	850
Width of the product	450
Depth of the product	590
Depth with open door 90 degree (mm)	-
Minimum niche height	820
Maximum niche height	900
Minimum niche width	450
Maximum niche width	600
Niche depth	590
Net weight (kg)	34.9
Gross weight (kg)	36.7

TECHNICAL FEATURES

Automatic programmes	No
Maximum temperature for water intake (°C)	60
Start delay options	Continuous
Start delay time max. (h)	8
Progress indicator	-
Digital countdown indicator	No
Salt light indicator	Yes
Rinse aid light indicator	Yes
Safety device	Yes
Adjustable upper basket	Yes
Largest loadable dish upper basket (cm)	0
Largest loadable dish lower basket (cm)	0
Number of place settings	10

PERFORMANCES

Energy efficiency class - NEW (2010/30/EU)	A+
Energy consumption annual (kWh/annum) - NEW (2010/30/EU)	238
Duration of the left-on mode - NEW (2010/30/EU)	12
Power consumption in left-on mode - NEW (2010/30/EU)	5
Power consumption in off-mode - NEW (2010/30/EU)	0.5
Water consumption annual (l/annum) - NEW (2010/30/EU)	3220
Noise level (dB(A) re 1 pW)	49

