SMF 778 C/NE/IXL

12NC: 859991538600

GTIN (EAN) code: 8003437230387

Whirlpool
SENSING THE DIFFERENCE

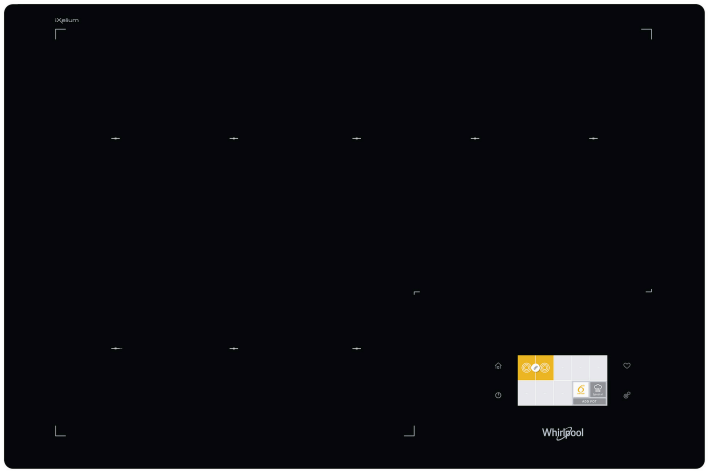

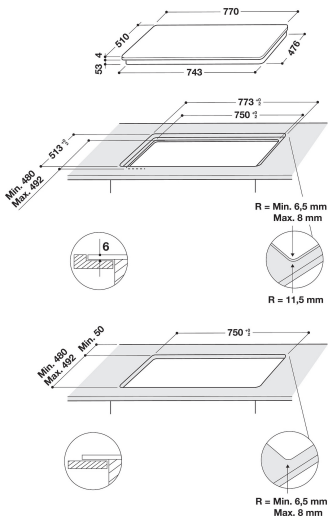

- iXelium treatment
- 6TH Sense Technology
- 6thSense Live
- ChefControl
- 8 induction cooking zones
- Easy installation
- FlexiFull
- MySmartSense Assisted Cooking: up to 100 6th Sense cooking combinations (W11)
- Pan Detection
- Residual heat indicator
- Child lock
- Warm keeping function
- On/Off Switch
- Smart Frying and Smart Grilling
- Simmering function
- Melting function

Whirlpool induction glass-ceramic hob - SMF 778 C/NE/IXL

8 induction rings. flexiCook zone technology, allowing you to combine multiple burners into a single cooking zone, for larger pots and pans. This Whirlpool induction glass-ceramic Hob features: An elegant technology, that heats the pan, not the hob, reducing energy dispersion and providing perfect cooking results. Electric power supply.

6thSenseLive App
To explore new recipes with enlightening tutorials, schedule meals, and discover endless ways to enjoy an intuitive cooking experience on Whirlpool induction hobs.

FlexiFull
Cook anywhere on the completely flexible surface with pans of all shapes and sizes.

Sensor Cooking
Great results, recipe after recipe, with 6TH SENSE sensors' temperature adjustments.

Smart Grilling
The Grill function is designed to cook your grilled dishes to perfection, thanks to a special heat detector that constantly monitors the cooking temperature.

Smart Frying
The Fry function allows you to enjoy delicious, crispy fried dishes, thanks to a special heat detector which constantly monitors the cooking temperature.

French Plaque
Chef Control is an innovative cooking tool that allows you to cook without having to adjust temperatures via the hob. Simply shift the pots around on the cooking surface and enjoy delicious meals!

Front Controls
Complete control over your cooking. Easily accessible and genuinely intuitive, the controls are conveniently positioned on the front panel of your hob, providing a frictionless cooking experience.

Induction technology
Faster, energy-efficient cooking. Induction technology heats the pan, not the hob, reducing energy dispersion by 10%, and providing perfect cooking results.

iXelium
Long lasting shine. The revolutionary iXelium treatment protects your hob from scratches and corrosion, ensuring a perfect shine, always. And, it's easy to clean: all you need is water and a soft cloth.

SMF 778 C/NE/IXL

12NC: 859991538600

GTIN (EAN) code: 8003437230387

Whirlpool
SENSING THE DIFFERENCE

MAIN FEATURES

Product group	Hob
Construction type	Built-in
Type of control	Electronic
Type of control settings	-
Number of gas burners	0
Number of electric cooking zones	5
Number of electric plates	0
Number of radiant plates	0
Number of halogen plates	0
Number of induction plates	8
Number of electric warming zones	0
Location of control panel	Front
Basic surface material	Ceramic Glass
Main colour of product	Black
Electrical connection rating (W)	7200
Gas connection rating (W)	0
Current (A)	31,3
Voltage (V)	230
Frequency (Hz)	50/60
Length of Electrical Supply Cord (cm)	170
Plug type	No
Gas connection	N/A
Width of the product	770
Height of the product	51
Depth of the product	510
Minimum niche height	30
Minimum niche width	752
Niche depth	480
Net weight (kg)	18.5
Automatic programmes	Yes

TECHNICAL FEATURES

Power on indicator	Yes
Number of indicators	6
Type of regulation	Stepless energy regulated
Type of lid	Without
Residual heat indicator	Separate
Main on/off switch	Yes
Safety device	-
Timer	Yes

PERFORMANCES

Energy input	Electric