PMW 75D2/IXL

12NC: 859991546910

GTIN (EAN) code: 8003437231957

Whirlpool
SENSING THE DIFFERENCE



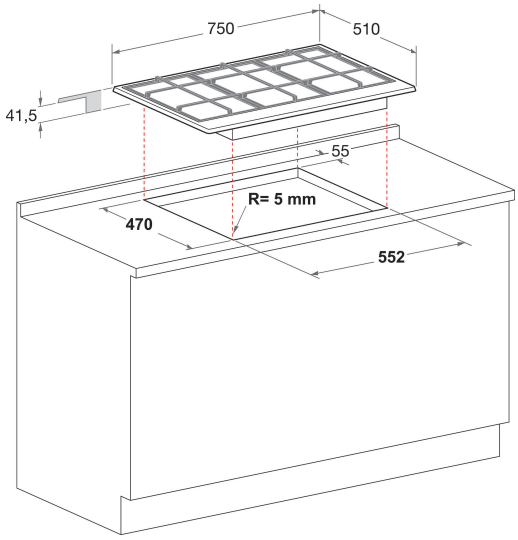

- Cast Iron Pan Supports
- Electromagnetic safety device for each burner
- Brushed chrome knobs
- 3 W Collection PreciseFlame Cast Iron grids
- Front controls
- 75 cm hob
- Ignition type: knob
- 5 Burners
- 5 burners: 1 Auxiliary 1000 W burner, 1 Semirapid 1900 W burner, 1 Semirapid 1900 W burner, 1 Auxiliary 1000 W burner, and 1 Rapid 3000 W burner.
- Supply cord included
- Dimensions HxWxD: 40x750x510 mm
- Voltage: 220-240 V
- Gas Type: Only Gas-Methane 20 mBar
- Front left zone: 132 mm Ø, Auxiliary 1000 W
- Rear left zone: 132 mm Ø, Semirapid 1900 W

Whirlpool gas hob: 5 gas burners - PMW 75D2/IXL

This Whirlpool gas Hob features: iXelium stain-resistant surface for effortless cleaning.

PreciseFlame
The flush burners with a PreciseFlame vertical flame heat the base of the pan directly for reduced heat dispersion, which saves gas and increases efficiency.

iXelium
Long lasting shine. The revolutionary iXelium treatment protects your hob from scratches and corrosion, ensuring a perfect shine, always. And, it's easy to clean: all you need is water and a soft cloth.

Booster
Enjoy super fast boiling times with the Booster cooking zone.

Flush design
The flush burners with a PreciseFlame vertical flame heat the base of the pan directly for reduced heat dispersion, which saves gas and increases efficiency. The sleek design stylishly reflects the latest appliance trends, providing a fabulous focal point for any modern kitchen. The flush design of the burners with a maximum height of 10,5 mm ensures the hobs are even easier to clean. Cooktop grids are made of cast iron, a top performing material resistant to high temperatures, durable in time and perfectly transmit heat for outstanding functionality and aesthetics.

Full width cast iron grids
The full-width cast-iron pan support maximises the cooking surface with an edge-to-edge design so pans can slide effortlessly from one burner to another without any lifting and is durable enough to withstand damage and prevent rusting or scratching. Cooktop grids are made of cast iron, a top performing material resistant to high temperatures, durable in time that perfectly transmit heat. Restyled for added comfort and beauty, the distinctive design of the ergonomic knobs ensures easier use, greater control, and easeness of cleaning on steel and glass models.

Easy to clean
Easy cleaning. With our easy-to-clean surfaces, all you need to make your hob shine is a clean, damp cloth.

Front Controls
Complete control over your cooking. Easily accessible and genuinely intuitive, the controls are conveniently positioned on the front panel of your hob, providing a frictionless cooking experience.

PMW 75D2/IXL

12NC: 859991546910

GTIN (EAN) code: 8003437231957

Whirlpool
SENSING THE DIFFERENCE

MAIN FEATURES

Product group	Hob
Construction type	Built-in
Type of control	N/A
Type of control settings	-
Number of gas burners	5
Number of electric cooking zones	0
Number of electric plates	0
Number of radiant plates	0
Number of halogen plates	0
Number of induction plates	0
Number of electric warming zones	0
Location of control panel	Front
Basic surface material	Inoxclearcoat
Main colour of product	Inox
Electrical connection rating (W)	0
Gas connection rating (W)	0
Current (A)	0
Voltage (V)	220-240
Frequency (Hz)	50/60
Length of Electrical Supply Cord (cm)	0
Plug type	No
Gas connection	N/A
Width of the product	750
Height of the product	40
Depth of the product	510
Minimum niche height	0
Minimum niche width	555
Niche depth	475
Net weight (kg)	14.9
Automatic programmes	No

TECHNICAL FEATURES

Power on indicator	No
Number of indicators	0
Type of regulation	Stepless energy regulated
Type of lid	Without
Residual heat indicator	Without
Main on/off switch	No
Safety device	-
Timer	No

PERFORMANCES

Energy input	Gas