BI WMWG 71484 UK

12NC: 859991559360

GTIN (EAN) code: 8003437234651

SENSING THE DIFFERENCE



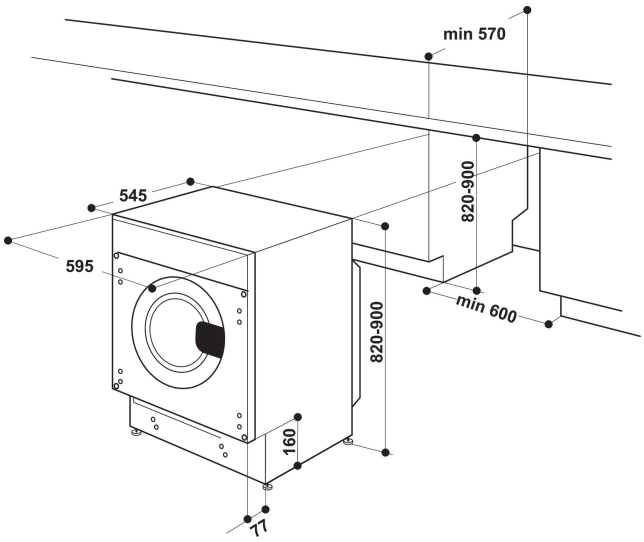

- Energy class A+++
- Washing capacity: 7 kg
- Maximun spin speed: 1400 rpm
- SoftMove
- FreshCare+
- PrecisionClean
- Daily 30°
- Daily 40°
- Daily mixed 40°C
- Rapid
- Chrono 30°C
- Eco Cotton
- Mixed Fabrics Program
- Special Big Items Program
- Jeans
- Sport
- Colours 15°

Whirlpool built in front loading washing machine: Whirlpool built in washing machine, 7 kg - BI WMWG 71484 UK

This Whirlpool built in Washing Machine features: white color. A spacious 7kg capacity. Our small compact appliance is the perfect solution for a small place. A fast, resource-efficient 1400 revolutions per minute spin speed. Outstanding A+++ energy rating, effectively reducing energy consumption by 10%.

FreshCare+
Keep your garments fresh after the cycle is over. Innovative FreshCare+ system takes care of your garments inside the washing machine with delicate steaming and tumbling action[i]. The new FreshCare+ system gently massages the laundry with regular slow movements alternated with steam actions - letting air circulate inside the fibers to keep garments fresh and prevent bad odours. FreshCare+ treatment leaves truly fresher clothes and peace of mind - even hours after the end of the cycle. [i] FreshCare+ treatment inhibits the proliferation of the main bad odour sources (inside the washing machine) up to 6 hours after the washing ends. Not compatible with programmes designed for delicate garments and duvets.

SoftMove
SoftMove technology provides a drum motion during cycles, ensuring extra care for your delicate items.

Precision Clean
Ideal washing results. PrecisionClean's powerful water jets focus directly on the dirt, not on the fibre, providing ideal washing results, always.

Sense Inverter Motor
Silent performance. This Whirlpool Washing machine's innovative SENSE Inverter Motor is designed to ensure a long lasting, silent performance. Enjoy both ideal results and some extra peace and quiet.

1400 rpm
Outstanding speed. This Whirlpool Washing Machine features a 1400 rounds per minute spin speed.

Super Energy efficiency: A+++-10%
Unparalleled energy efficiency. This Whirlpool Washing Machine features an outstanding A+++ energy rating, reducing energy consumption by 10%.

7kg capacity
This Whirlpool Washing Machine offers 7kg drum capacity for your laundry.

Child Lock
Safety first. This Whirlpool Washing Machine features a child lock system, to prevent toddlers and children from accidentally using this appliance.

BI WMWG 71484 UK

12NC: 859991559360

GTIN (EAN) code: 8003437234651

Whirlpool
SENSING THE DIFFERENCE

MAIN FEATURES

Product group	Washing machine
Construction type	Built-in
Installation type	Built-in
Removable work top	No
Loading type	Front loader
Main colour of product	White
Electrical connection rating (W)	1850
Current (A)	13
Voltage (V)	220-240
Frequency (Hz)	50
Length of Electrical Supply Cord (cm)	170
Plug type	UK
Height of the product	820
Width of the product	595
Depth of the product	545
Net weight (kg)	64.4

TECHNICAL FEATURES

Automatic programmes	Yes
Spin speed options	Variable
Skip spin	Yes
Weight measurement	-
Textile type recognition	No
Degree of dirtiness recognition	No
Foam control	Yes
Balance control	Yes
Type of water protection system	No
Cold wash option	No
Progress indicator	DISPLAY
Digital countdown indicator	No
Start delay options	Continuous
Start delay time max. (h)	0
Tub material	Plastic
Drum volume (l)	52
Hot & cold water intake?	No
Gross weight (kg)	66.5
Height of the packed product	890
Width of the packed product	645
Depth of the packed product	595

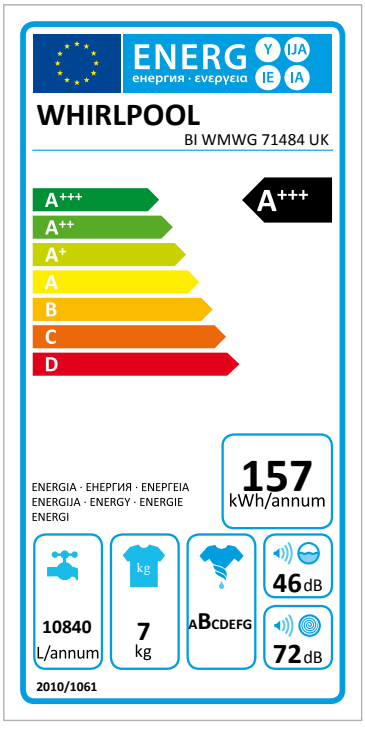

PERFORMANCES

Energy efficiency class - NEW (2010/30/EU)	A+++
Energy consumption annual (kWh/annum) - NEW (2010/30/EU)	157
Washing performance class	A
Maximum spin speed (rpm) - NEW (2010/30/EU)	1400
Capacity cotton (kg) - NEW (2010/30/EU)	7
Water consumption annual (l/annum) - NEW (2010/30/EU)	10840
Energy consumption 60 °C full load	0.822
Power consumption in left-on mode - NEW (2010/30/EU)	8
Power consumption in off-mode - NEW (2010/30/EU)	0.5
Moisture content % on dry load after max. spin - NEW (2010/30/EU)	53
Average washing time cotton 60°C (full load) - NEW (2010/30/EU)	270
Noise level washing (dB(A) re 1 pW)	46
Noise level spinning (dB(A) re 1 pW)	72