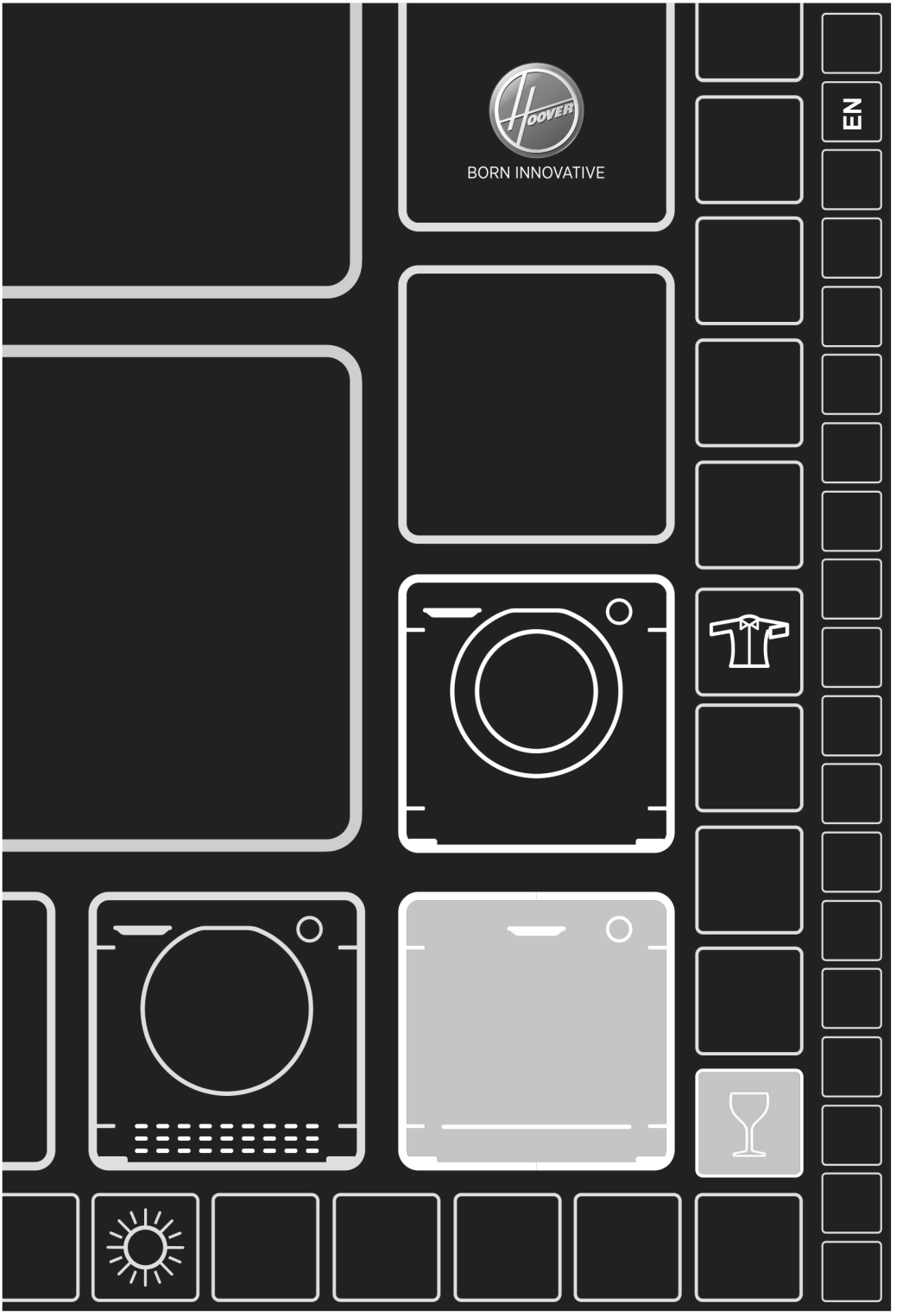
HOOVER
BORN INNOVATIVE
EN

Thank you for choosing a **Hoover** dish washer. We are confident it will assist you loyally in washing your daily dishes in full safety.

Carefully read this manual for correct and safe appliance use and for helpful tips on efficient maintenance.

Only use the dish washer after carefully reading these instructions. We recommend you always keep this manual to hand and in good condition for any future owner.

Please check that the appliance is delivered with this instruction manual, the warranty certificate, the service centre address and the energy efficiency label. Each product is identified by a unique 16-digit code, also called the “serial number”, printed on the warranty certificate or on the serial plate found inside the door, on the upper right hand side. This code is a sort of product-specific ID card that you will need to use to register the product or if you need to contact the Technical Assistance Centre.

Fig. A

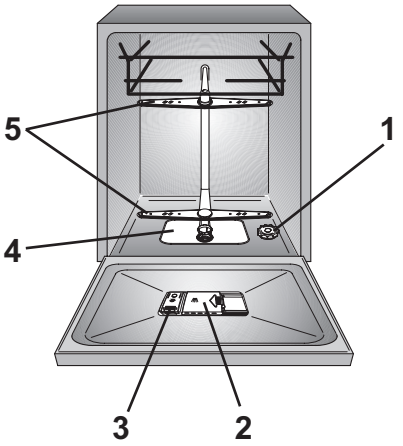

Contents

1. *GENERAL SAFETY RULES*
2. *WATER CONNECTION*
3. *LOADING THE SALT*
4. *ADJUSTING THE UPPER BASKET (ONLY ON SOME MODELS)*
5. *LOADING DISHES*
6. *INFORMATION FOR TEST LABORATORIES*
7. *LOADING THE DETERGENT*
8. *TYPES OF DETERGENT*
9. *LOADING THE RINSE AID*
10. *CLEANING THE FILTERS*
11. *PRACTICAL HINTS*
12. *CLEANING AND MAINTENANCE*
13. *DESCRIPTION OF THE CONTROL PANEL*
14. *TECHNICAL DATA*
15. *PROGRAMME SELECTION AND SPECIAL FEATURES*
16. *REMOTE CONTROL (Wi-Fi)*
17. *PROGRAMME LEGEND*
18. *WATER SOFTENER UNIT*
19. *TROUBLESHOOTING AND WARRANTY*
20. *ENVIRONMENTAL CONDITIONS*

A. WIRELESS PARAMETERS (PAG.38)

1. GENERAL SAFETY RULES

- This appliance is intended to be used in household and similar applications such as:
  - Staff kitchen areas in shops, offices and other working environments;
  - Farm houses;
  - By clients in hotels, motels and other residential type environments;
  - Bed and breakfast type environments.

A different use of this appliance from household environment or from typical housekeeping functions, as commercial use by expert or trained users, is excluded even in the above applications. If the appliance is used in a manner inconsistent with this it may reduce the life of the appliance and may void the manufacturer's warranty. Any damage to the appliance or other damage or loss arising through use that is not consistent with domestic or household use (even if located in a domestic or household environment) shall not be accepted by the manufacturer to the fullest extent permitted by law.

- This appliance can be used by children aged from 8 years and above and persons with reduced physical, sensory or mental capabilities or lack of experience and knowledge if they have been given supervision or instruction concerning use of the appliance in a safe way and understand the hazards involved. Children shall not play with the appliance. Cleaning and user maintenance shall not be made by children without supervision.

- Children should be supervised to ensure that they do not play with the appliance.

- Children of aged 3 and under should be kept away unless continuously supervised.

- If the supply cord is damaged, it must be replaced by the manufacturer, its service agent or similarly qualified persons in order to avoid a hazard. We recommend using an original component, which can be requested from the Technical Assistance Centre.

- Only use the hose-sets supplied with the appliance for the water supply connection (do not reuse old hose-sets).

- Water pressure must be between 0.05 MPa and 0.8 MPa.

- Make sure carpets or rugs do not obstruct the base or any of the ventilation openings.
- After installation, the appliance must be positioned so that the plug is accessible.

⚠ WARNING:
Knives and other utensils with sharp points must be loaded in the basket with their points down or placed in a horizontal position.

- Do not leave the door open in a horizontal position, in order to avoid potential dangers (e.g. tripping).
- For further information on the product or to consult the technical data sheet, please refer to the manufacturer's website.

Electrical connections and safety instructions

- The technical details (supply voltage and power input) are indicated on the product rating plate.
- Make sure that the electrical system is earthed and complies with all applicable laws, and that the socket is compatible with the plug of the appliance.

The manufacturer declines all responsibility for any damage to people or property due to non-earthing of the machine.

- Ensure that the dishwasher does not crush power cables.
- In general it is not advisable to use adaptors, multiple plugs and/or extension cables.
- Before cleaning or maintaining the dishwasher, unplug the appliance and turn off the water supply.
- Do not pull on the power cord or appliance to unplug the machine.
- Do not leave the appliance exposed to the elements (rain, sun, etc.).
- Leaning or sitting on the open door of the dishwasher could cause it to tip over.
- The dishwasher is designed for normal kitchen utensils. Objects that have been contamined by petrol, paint, traces of steel or iron, corrosive chemicals, acids or alkalis must not be washed in the dishwasher.

- If there is a water softening device installed in the home there is no need to add salt to the water softener fitted in the dishwasher.
- If the appliance breaks down or stops working properly, switch it off, turn off the water supply and do not tamper with it. Repair work should only be carried out by an approved service agent and only genuine spare parts should be fitted. Any failure to follow the above advice may have serious consequences for the safety of the appliance.
- If it you need to move the machine after removing the packaging, do not try to lift it by the bottom of the door. Open the door slightly and lift the machine by holding on the top.

By CE marking this product, we confirm, under our own responsibility, full compliance of this product with all relevant safety, health and environmental requirements under European legislation.

Installation

- Remove all elements of the packaging.

⚠ WARNING:
Keep packaging materials away from children.

- Do not install or use the dishwasher if it is damaged.
- Follow the instructions supplied with the product.

2. WATER CONNECTION

The appliance must be connected to the water mains using new hose-sets. The old hose-sets should not be reused.

- The inlet and drain hoses can be directed to left or right.

The dishwasher can be connected to either cold or hot water, as long as it is no hotter than 60°C.

- Water pressure must be between 0,08 MPa and 0,8 MPa.
- The inlet hose must be connected to a tap so that the water supply can be cut off when the machine is not in use **(fig. 1 B).**
- The dishwasher is fitted with 3/4" threaded connector **(fig. 2)**.
- Connect inlet hose **"A"** to water tap **"B"** with a 3/4" attachment making sure that it has been properly tightened.
- If it is necessary, the inlet pipe can be lengthened up to 2,5 m. The extension pipe is available from the After Sales Service Centre.
- If the dishwasher is connected to new pipes or to pipes which have not been inuse for a long time run water through for a few minutes before connecting the inlet hose. In this way no deposits of sand or rust will clog up the water inflow filter.

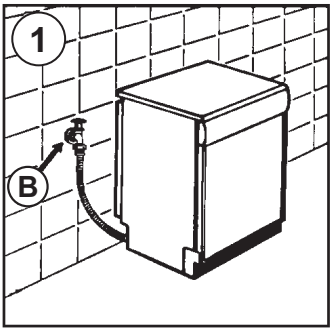

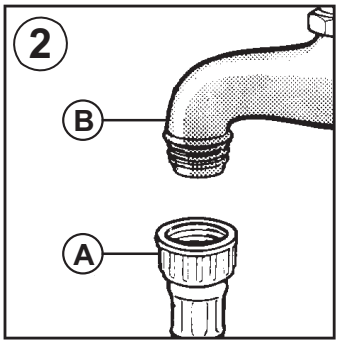

Hydraulic safety devices

All the dishwashers are equipped with an overflow safety device which, if water exceeds normal levels due to malfunctions, automatically blocks water flow and/or drains excess quantities.

SOME MODELS may include one or more of the following features:

- **WATERBLOCK (fig. 3)**
  The waterblock system has been designed to improve the safety of your appliance. The system prevents flooding which might be caused by a machine malfunction or as a result of a fracture on the rubber pipes and in particular on the water supply pipe.

How it works
A sump located on the base of the appliance collects any possible water leakage and operates a sensor which activates a valve placed under the water tap and blocks any water, even with the tap fully opened.
If **box "A"** containing the electrical parts is damaged, remove the plug from the socket immediately. To ensure perfect operation of the safety system, the hose with box **"A"** should be connected to the tap as shown in the **figure**. The water supply hose should **not** be cut, as it contains live parts. If the hose is not long enough for correct connection, it must be replaced with a longer one. The hose can be obtained from the Technical Assistance Centre.

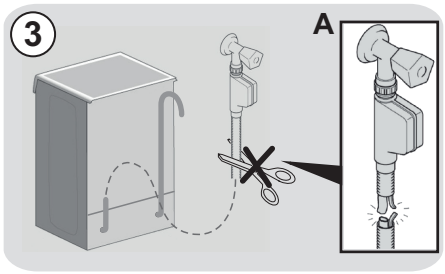

- **AQUASTOP (fig. 4):**
  A device located on the supply tube that stops water flow if the tube deteriorates; in this case, a red mark will appear in the window **"A"** and the tube must be replaced. To unscrew the nut, press the one-way lock device **"B"**.

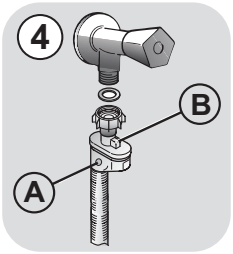

- **AQUAPROTECT - SUPPLY TUBE WITH GUARD (fig. 5):**
  Should water leak from the primary internal tube **"A"**, the transparent containment sheath **"B"** will contain water to permit the washing cycle to complete. At the end of the cycle, contact the Customer Service Centre to replace the supply tube.

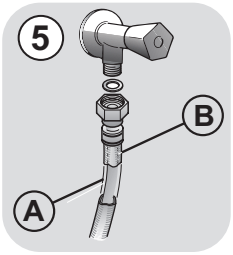

EN

Connecting the outlet hose

- The outlet hose should disharge into a standpipe, making sure that there are no kinks **(fig. 6)**.
- The standpipe must be at least 40 cm above floor level and it must have an internal diameter of at least 4 cm.
- It is advisable to fit an anti-odour air trap **(fig. 6X)**. If necessary the outlet hose can be extended up to 2,5 m, provided that it is kept at a maximum height of 85 cm above floor level. The extension pipe is available from the After Sales Service Centre.
- The hose can be hooked over the side of the sink, but it must not be immersed in water, in order to prevent water from being syphoned back to the machine when this is in operation **(fig. 6Y)**.
- When installing the appliance under a worktop the hose pipe clamp must be attached to the wall in the highest possible position under the worktop **(fig. 6Z)**.
- Check that there are no kinks in the inlet and outlet hoses.

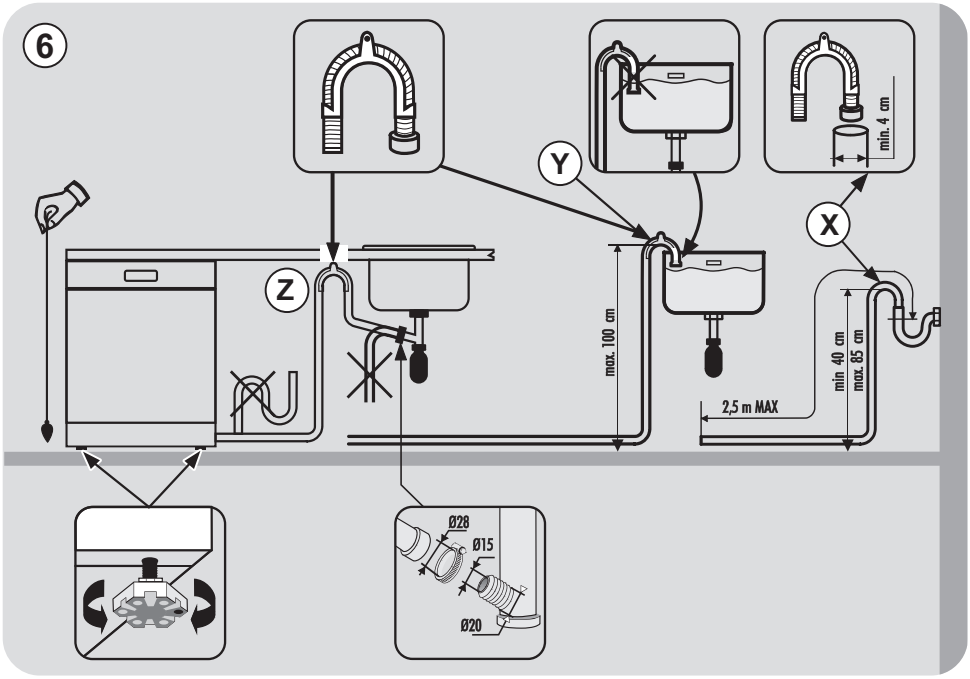

3. LOADING THE SALT

(Fig. A "1")

- The appearance of white stains on dishes is generally a warning sign that the salt container needs filling.
- On the bottom of the machine there is a container for the salt for regenerating the softener.
- It is important to use only a salt that is specifically designed for dishwasher. Other types of salt contain small quantities of insoluble particles which over a long period of time may affect and deteriorate the softener performance.
- To add salt, unscrew the cap of the container on the bottom and then refill the container.
- During this operation a little water will overflow; but keep adding salt until the container is full. When the container is full, clean the thread of salt residue and retighten the tap.
- After loading the salt, it is recommended running a complete washing cycle, or COLD RINSE programme.

After loading the salt, YOU MUST run a complete washing cycle, or the PRE-WASH/COLD RINSE/REFRESH programme.

- The salt dispenser has a capacity of between 1.5 and 1.8 kg and, for efficient use of the appliance, it should be refilled from time to time .

(Only for first start up) When the appliance is used for the first time, after completely filling the salt container, it is necessary to add water until the container overflows.

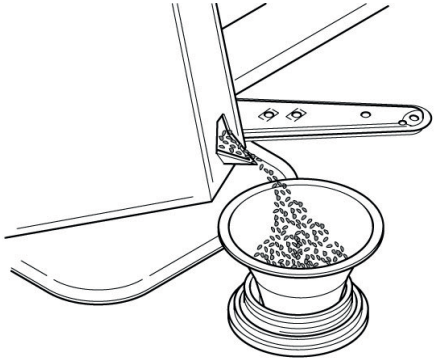

4. ADJUSTING THE UPPER BASKET (ONLY ON SOME MODELS)

- If 29 cm to 32.5 cm plates are regularly used, load them onto the lower basket after the upper basket has been placed in its upper position, as detailed below (according to the model):

Type "A":

1. Turn front blocks **"A"** outwards;
2. Remove the basket and remount it in the upper position;
3. Replace blocks **"A"** in the original position.

Dishes that are greater than 20 cm in diameter can no longer be loaded onto the upper basket, and the mobile supports cannot be used when the basket is in the upper position.

Type "A"

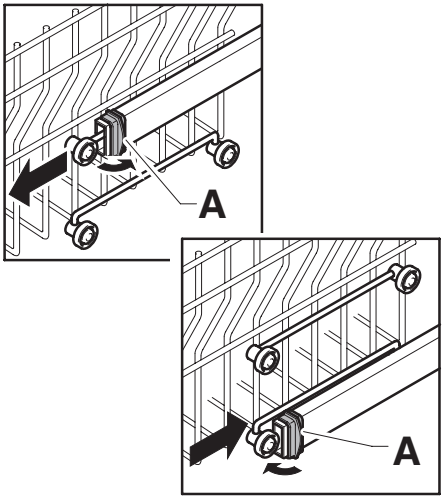

Type "B":

(ONLY MODELS WITH EASY CLICK):

1. Remove the upper basket;
2. Hold the basket on both sides and lift it upwards **(fig. 1).**

Dishes that are greater than **20 cm*** in diameter can no longer be loaded onto the upper basket, and the mobile supports cannot be used when the basket is in the upper position.

***** In models fitted with a third basket, dishes measuring more than **14 cm** in diameter can no longer be loaded onto the upper basket.

ADJUSTING THE BASKET TO THE LOWER POSITION:

1. Hold the basket on both sides and lift it gently upwards **(fig. 1);**
2. Then slowly release into the correct position **(fig. 2).**

N.B.: NEVER LIFT OR LOWER THE BASKET FROM ONE SIDE ONLY (fig. 3).

WARNING:

We recommend adjusting the basket before loading the dishes.

Type "B"

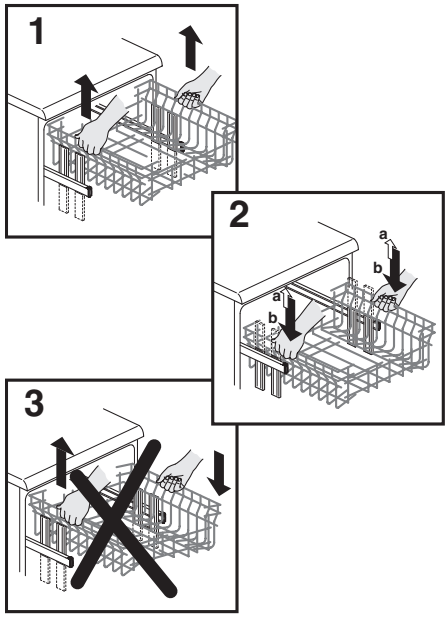

5. LOADING DISHES

Using the upper basket

- The upper basket is provided with mobile racks hooked to the sides of the basket, which can be regulated into 4 positions.
- In the lowered position **(A-A1)** the racks may be used for such items as: tea and coffee cups, kitchen knives and ladles. Also glasses with stems may be safely hung on the ends of the racks.

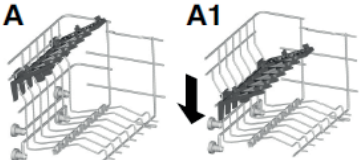

- In the upright position **(B-B1)** the racks allow you to load dinner plates and soup plates up to a maximum diameter of 19 cm. Plates should be loaded vertically with the underside of the plate towards the back of the dishwasher with a space between each plate to allow water to pass freely.

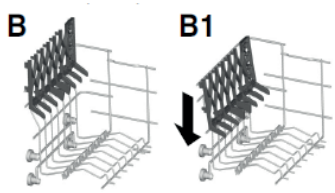

- It is advisable to load large plates (approx. 26 or more cm) slightly tilted towards the rear to facilitate introduction of the basket into the machine.
- Salad bowls and plastic bowls may also be loaded on the upper basket. It is advisable to block these in place so that the jets of water do not make them overturn.
- The upper basket has been designed to offer maximum flexibility in use and can be loaded with up to 24 plates on two rows, up to 30 glasses on five rows or a mixed load.

A standard daily load is represented in **figs. 1** and **2**.

Upper basket (fig. 1)

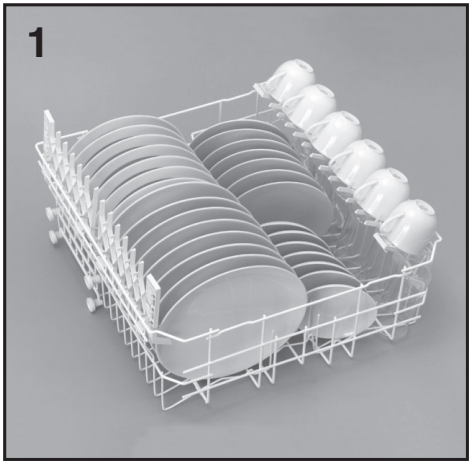

Upper basket (fig. 2)

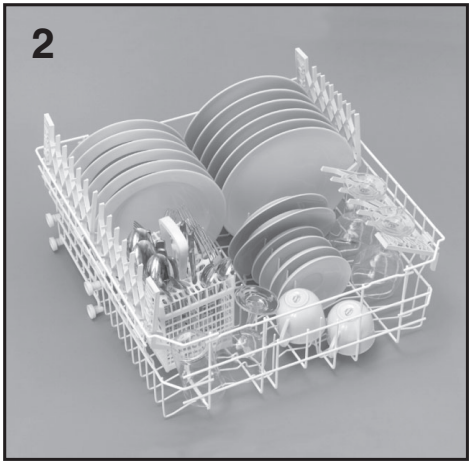

Using the lower basket

- Saucepans, oven dishes, tureens, salad bowls, lids, serving dishes, dinner plates and soup plates can be loaded into the lower basket.

EN

- Place the cutlery in the plastic cutlery holder with the handles pointing upwards and place the cutlery holder on the lower basket **(fig. 6)** making sure that the cutlery does not get in the way of the rotating arms.
- The lower basket is fitted with a special adjustable central rack **(fig. 3** and **4)**. This permits stable and optimum loading, even when the size and/or shape of the dishes is non-standard.

- **POSITION "A":** for a standard load, or one that excludes pans, salad bowls and the like.
- **POSITION "B":** for dishes which, although standard size, have a particular shape (very deep bowls, square dishes or ones without borders etc.).
- **POSITION "C":** for larger than average flat plates and/or ones with non-standard shapes (square, hexagonal, oval, pizza dishes etc.).

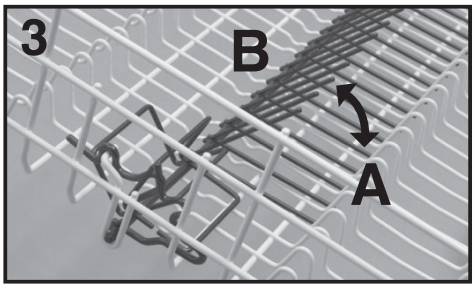

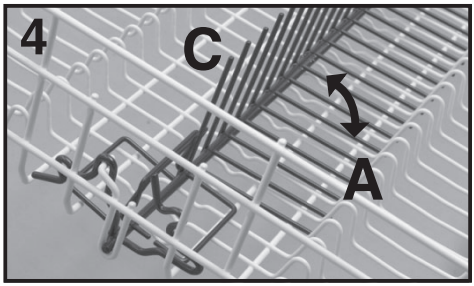

- Smaller plates (used for dessert plates for example), can also be placed into the lower basket as shown in the **figure 5**, with the support flap placed outwards **("E")**. For normal or large plates the flap must be in the position **("D").**

Upper basket (fig. 5)

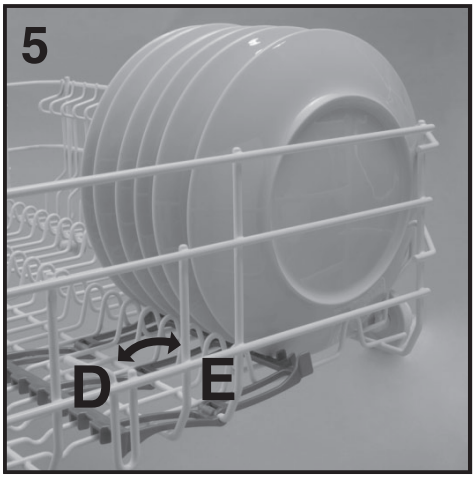

WARNING!

If the small plates are placed in the basket with the support flap in the incorrect position, the plates will interfere with the lower spraying arm preventing it to rotate.

A standard daily load is represented in **fig. 6**.

Lower basket (fig. 6)



Please load the dishwasher sensibly to ensure the best wash results.

The lower basket has a safety-stop device, for its safe extraction, also especially useful with a full load. For loading salt, cleaning filter and for ordinary maintenance, the complete extraction of the basket is necessary.

Cutlery basket (fig.7)

The cutlery basket is made with two detachable parts which will enable various loading options. The two parts can be detached by sliding the left section away from the right section. The top of cutlery basket can be removed, for enable various loading options.

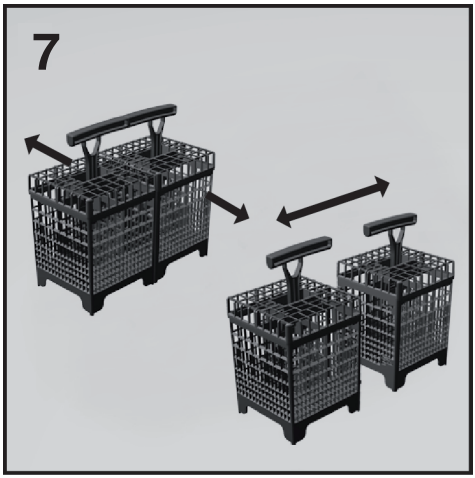

6. INFORMATION FOR TEST LABORATORIES

Please ask information required for comparison testing and measuring noise levels, according to EN normative, to the following address:

testinfo-dishwasher@candy.it

In the request, please specify model name and number of the dishwasher (see rating plate).

7. LOADING THE DETERGENT

(Fig. A "2")

The detergent

It is essential to use a detergent that is specifically designed for dishwashers either in powder, liquid,gel or tablet form.

Unsuitable detergents (like those for washing up by hand) do not contain the proper ingredients for use in a dishwasher, and stop the dishwasher from working correctly.

Filling the detergent container

The detergent container is inside the door **(fig. A "2")**. If the lid of the container is closed, press the button **(A)** to open. At the end of every wash cycle the lid is always open and ready for the next time the dishwasher is used.

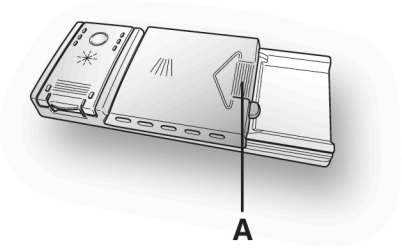

⚠ WARNING

When loading the lower basket, please ensure that the plates or others do not obstruct the detergent dispenser.

The amount of detergent to be used varies according to how dirty the dishes are and on the type of dishes to be washed. We advise using 20:30 g of detergent in the wash section of detergent compartment **(B)**.

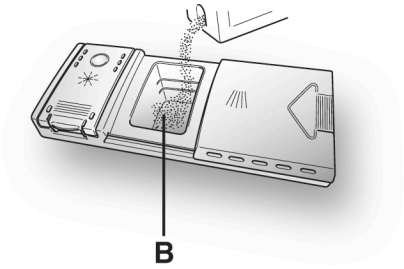

After pouring the detergent into the container, close the lid, firstly pushing **(1)** and then pressing on it **(2)** until you hear the click.

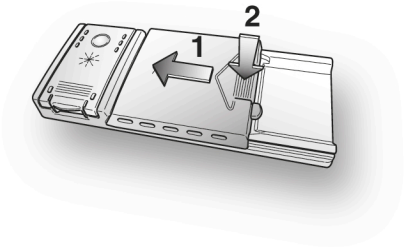

Since not all detergents are the same the instructions on the boxes of detergent can vary. We should just like to remind users that too little detergent does not clean the dishes properly whilst too much detergent will not produce better results and is also a waste.

Do not use an excessive amount of detergent and help limit damage to the environment at the same time.

8. TYPES OF DETERGENT

Detergent tablets

Detergent tablets of different manufacturers dissolve at different speeds, for this reason, during short programmes, some detergent tablets may be not fully effective, because they are not completely dissolved. If these products are used, is recommended to choose longer programmes to guarantee the complete use of the detergent.

To get satisfactory washing results, the tablets MUST be placed in the wash section of the detergent container and NOT directly in the tub.

Concentrated detergents

The concentrated detergents, with reduced alkalinity and with natural enzymes, in conjunction with 50°C wash programmes, have a smaller impact on the environment and they protect the dishes and the dishwasher. The 50°C wash programmes purposely exploit the dirt-dissolving properties of the enzymes, allowing therefore, with the use of the concentrated detergents, to achieve the same results of the 65°C programmes but at a lower temperature.

Combined detergents

The detergents that also contain the rinse aid must be placed in the wash section of the detergent container. The rinse aid container must be empty (if it is not empty, set the rinse aid regulator to lowest position before using combined detergents).

"TABS" combined detergents

If you are planning to use **"TABS"** (“3 in 1 “/ “4 in 1”/ “5 in 1”, etc.) combined detergents i.e. those with built in salt and/or rinse agent, we would advise the following:

- read carefully and follow the manufacturer’s instructions given on the packaging;
- the effectiveness of detergents containingthe built in water softener/salt depends on the hardness of your water supply. Check that the hardness of your water supply is within the effective range given on the detergent packaging.

If when using this type of product, you don't get satisfactory washing results, please contact the detergent manufacturer.

In certain circumstances use of combined detergents can cause:

- limescale deposits on dishes or in the dishwasher;
- a reduction in washing and drying performance.

Any problems which arise as a direct result of the use of these products are not covered by our warranty.

Please note that using the "TABS" combined detergents, the rinse aid and salt indicator lights (only used on selected models) are superfluous, so you must ignore the lights.

If washing and/or drying problems occur, we recommend you return to use traditional separate products (salt, detergent and rinse agent). This will ensure that the water softener in the dishwasher operates correctly.

In this case, we recommends that you:

- refill both the salt and rinse aid container;
- run one normal washing cycle without a load.

Please note that on return to the use of conventional salt, a number of cycles will be required before the system becomes fully efficient again.

9. LOADING THE RINSE AID

(Fig. A "3")

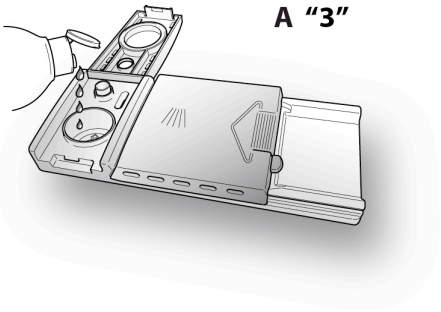

The rinse aid

The rinse aid, which is automatically released during the last rinsing cycle, helps the dishes to dry quickly and prevents spots and stains forming.

Filling the rinse aid container.

The rinse aid container can be found to the left of the detergent container **(fig. A "3").** To open the lid, push the reference mark and, in the same time, pull the tab of opening. It is always advisable to use rinse aid that is specifically designed for dishwasher. Check the rinse aid level through the indicator eye **(C)** which is located on the dispenser.

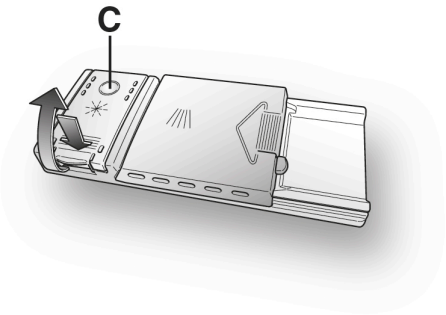

FULL EMPTY

dark light

Regulating the rinse aid from 1 to 6

The regulator **(D)** is placed under the lid and can be turned using a coin. The recommended position is **4**.
The limestone content of the water considerably affects the formation of limescale and the drying performance.
It is therefore important to regulate the quantity of rinse aid to achieve good washing results.
If, after the wash, streaks occur on the dishes, decrease the amount by one position. If whitish spots occur, increase the amount by one position.

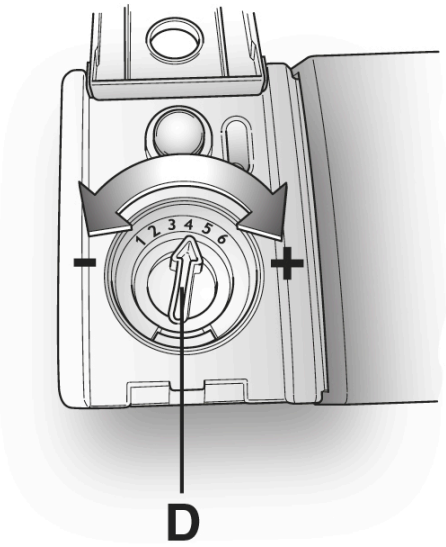

10. CLEANING THE FILTERS

(Fig. A "4")

The filter system consists of:

A. A central **container** that traps the larger particles;

B. A **micro filter**, located beneath the gauze, that traps the tiniest particles ensuring a perfect rinse;

C. A **flat gauze** that continuously filters the wash water.

- To achieve excellent results every time, the filters should be checked and cleaned after each wash.
- To remove the filter unit, simply turn the handle anticlockwise **(fig. 1)**.
- For ease of cleaning, the central container is removable **(fig. 2)**.
- Remove the gauze filter **(fig.3)** and wash the whole unit under a jet of water. If necessary a small brush can be used.
- With the **Self-cleaning Micro filter**, maintenance is reduced and the filter unit need only be checked every two weeks. Nevertheless, after each wash it is advisable to check that the central container and the gauze filter are not clogged.

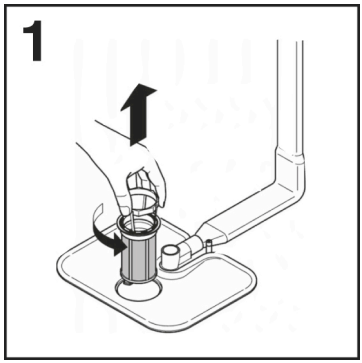

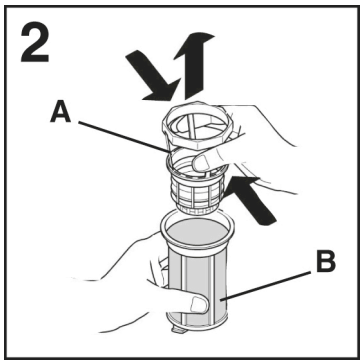

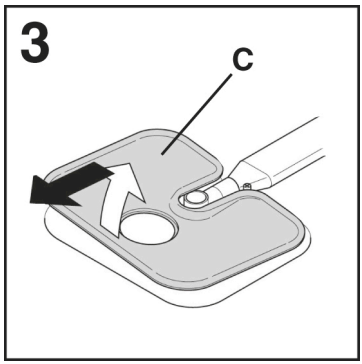

⚠ WARNING

After cleaning the filters, make sure that they are correctly reassembled and that the gauze filter is properly positioned at the bottom of the dishwasher. Make sure that the filter is screwed back, clockwise, into the gauze, as poor seating of the filter unit could have an adverse effect on the efficiency of the appliance.

Never use the dishwasher without the filters.

11. PRACTICAL HINTS

How to get really good wash results.

- Before placing the dishes in the dishwasher, remove any remaining food (bones, shells, pieces of meat or vegetables, coffee grounds, skin of fruit, cigarette ash, thooth picks etc. to avoid blocking the filters, water outlet and washing arm nozzles.
- Try not to rinse the dishes before loading them into the dishwasher.
- If saucepans and oven dishes are encrusted with the remains of burnt or roast food, it is advisable to leave them to soak before washing.
- Place the dishes face downwards.
- Try to place the dishes in such a way that they are not touching one another. If they are loaded properly you will get better results.
- After loading the dishes check that the washing arms can rotate freely.
- Pans and other dishes that have particularly stubborn food particles or remnants of burnt food should be left to soak in water with dishwasher detergent.
- To wash silver properly:

  a) rinse the silver immediately after use, especially if it has been used for mayonnaise, eggs, fish etc.;

  b) do not sprinkle detergent onto it;

  c) keep it separate from other metals.

How to make savings.

- If you want the dishwasher to give a complete wash, place the dishes in the dishwasher at the end of each meal and if necessary turn on the COLD RINSE cycle to soften the food remains and remove bigger particles of food from the new load of dishes. When the dishwasher is full start the complete wash cycle programme.
- If the dishes are not very dirty or if the baskets are not very full select an ECONOMY programme, following the instructions in the program list.

What not to wash.

- It should be remembered that not all dishes are suitable for washing in a dishwasher. We advise against using the dishwasher to wash items in thermoplastic, cutlery with wooden or plastic handles, saucepans with wooden handles, items in aluminum, crystal leaded glass unless otherwise stated.
- Certain decorations may fade. It is therefore a good idea before loading the whole batch to wash just one of the items first so as to be sure that others like it will not fade.
- It is a good idea not to put silver cutlery with non-stainless steel handles into the dishwasher as there could be a chemical reaction between them.

When buying new crockery or cutlery always make sure that they are suitable for washing in a dishwasher.

Useful hints

- In order to avoid any dripping from the top rack, remove the lower rack first.
- If the dishes are to be left in the machine for some time, leave the door ajar, to let some air circulate and to improve the drying performance.

12. CLEANING AND MAINTENANCE

(Fig. A “5”)

- To clean the dishwasher outside, do not use solvents (degreasing action) neither abrasives, but only a cloth soaked with water.

- The dishwasher does not require special maintenance, because the tank is self-cleaning.

- Regularly wipe the door gasket with a damp cloth to remove any food remains or rinse aid.

- Dishwasher cleaning is recommended, in order to remove limestone deposits or dirt. We suggest you run a washing cycle periodically with specialist dishwasher cleaning products. For all cleaning operations the dishwasher must be empty.

- If, in spite of the routine cleaning of the filters, you notice that the dishes or pans are not properly washed or rinsed, check that all the spray heads on the rotor arms **(fig. A “5”)** are clear.

If they are blocked, clean them in the following way:

1) to remove the upper rotor arm, turn it until it lines up with the stop marked by the arrow **(fig. 1b)**. Push it upwards **(fig. 1)** and, keeping it pushed in, unscrew it in a clockwise direction **(to reassemble it repeat the same operation, but turn it anticlockwise).** The lower rotor arm can be removed simply by pulling it upwards **(fig. 2)**;

2) wash the rotor arms under a jet of water to clear any blockage in the spray heads.

Do not use tools that can deform the spray heads.

3) when you have finished, refit the rotor arms in the same position, remembering to re-align the arrow and screw into position.

- Both the door lining and the tank lining are in stainless steel; however, should spots caused by oxidation occur, this is probably due to a high level of iron salts presents in the water.

- The spots can be removed with a mild abrasive agent; never use chlorine based materials, steel wool, etc.

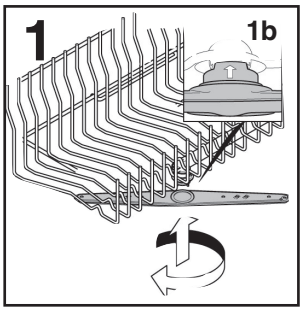

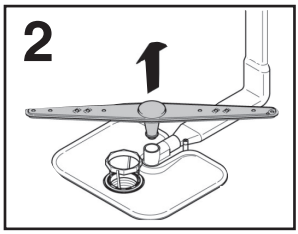

WHEN CYCLE IS FINISHED.

After every wash it is essential to turn off water supply and to switch off the machine by pressing the On/Off button to the off position.

If the machine is not going to be used for some time, it is advisable to follow these rules:

1. do an empty wash with detergent in order to clean the machine of any deposits;
2. pull out the electric plug;
3. turn off the water tap;
4. fill the rinse aid container;
5. leave the door ajar;
6. keep the inside of the machine clean;
7. If the machine is left in places where the temperature is below 0°C any water left inside the pipes may freeze. Wait until the temperature rises above zero and then wait for about 24 hours before.

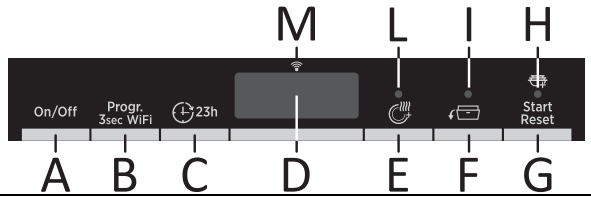

A ON/OFF Button

B "PROGRAMME SELECTION" button/ENROLMENT Wi-Fi

C "START DELAY" button

D Display

E "EXTRA DRY" option button

F "OPEN DOOR" option button

G "Start/Reset" button (start/cancel programme)

H "Addish" light

I "OPEN DOOR" light

L "EXTRA DRY" light

M "Wi-Fi" light

SIZE

DATA	FREE-STANDING		BUILT-IN	
	WITH WORKTOP	WITHOUT WORKTOP	HALF-INTEGRATED	FULL-INTEGRATED
Width x Height x Depth (cm)	60x85x60.9	59,8x82x58	59,8x81,8 ÷ 89,8x57	59,8x81,8 ÷ 89,8x55
Depth with door open (cm)	120	117	117	117

TECHNICAL DATA (See rating plate)

Place settings (EN 50242)	**13**	**15**	**16**
Capacity with pans and dishes	8 people	9 people	9 people
Water supply pressure (MPa)	Min. 0,08 – Max. 0,8		
Fuse / Power input / Supply voltage	See rating plate		

15. PROGRAMME SELECTION AND SPECIAL FEATURES

ON/OFF button

- To turn the appliance on and off, press the **ON/OFF** button (for at least 3 seconds).

At the end of the cycle, remember to switch off the appliance using the ON/OFF button, then remove the plug and close the water supply.

First time you switch on the appliance

- Connect the machine to the power supply.
- Open the door, put the dishes to be washed inside, and close the door again.
- Press the "**ON/OFF**" button and hold for about 3 seconds.
- In this phase only the **"OPEN DOOR/ EXPRESS" "EXTRA DRY"** and **"Start/Reset"** buttons will remain active. The message **"H-DISH 500"** will appear on the display and all the indicator lights will turn on for 3 secs.
- The message **"ENGLISH"** will appear on the display.
- Pressing the **"OPEN DOOR/EXPRESS"** and **"EXTRA DRY"** buttons you can select the preferred language.
- To accept the language selection press the **"Start/Reset"** button Immediately afterwards the **"WELCOME"** message will scroll on the display once and the indicator lights will all be off.
- The message of the **"ECO 2:50"** or **"ECO 3:25"** programme (with **OPEN DOOR** option activated).
- Press **"Start/Reset"** and a signal will sound, the indicator light corresponding to the selected programme will stay on and the wash indicator light will come on.
- Close the door (after an audible signal has sounded, the programme will start automatically).

⚠ WARNING

In the event that the machine remains switched on without selecting or starting any program, after 5 mins. the dishwasher will switch off automatically.

Next time you switch on the appliance

- Open the door.
- Hold down the **ON/OFF** button for about 3 secs to turn the machine on and the **"ECO 2:50"** programme or the programme you have decided to use will appear on the display, saving it when the dishwasher is switched on. (To save the programme, see the specific paragraph **"Memorising the last programme used"**).

Settings Menu

The dishwasher is regulated with certain factory settings. Nevertheless, from the Settings menu, you can adjust various parameters to suit your washing requirements.

Entering the Settings menu

The dishwasher must ALWAYS be off before you start this procedure.

- Open the door.
- Turn on the dishwasher by holding the **"ON/OFF"** button down for about 3 secs.
- Hold down the **"Progr."** and **"ON/OFF"** buttons for about 5 secs.
- The message **"SETTINGS"** will appear on the display and the indicator lights of the **"OPEN DOOR/EXPRESS"** and **"EXTRA DRY"** buttons will be on.

- Pressing the **"Progr."** button you can select the parameters to be adjusted in succession **(SOFTENER → BUZZER → MEMO FUNCTION)**.
- Parameter adjustment is performed by pressing the **"OPEN DOOR/EXPRESS" (-)** and **"EXTRA DRY" (+)** buttons.
- To adjust the **SOFTENER** see the specific Chapter of the manual).
- To adjust the **BUZZER** see the specific paragraph).
- To adjust the **MEMO FUNCTION** see the specific paragraph).

"AUTOMATIC" programmes (only on some models)

Models with Smart Loading Sensor
The **"Auto Daily Wash"** programme, thanks to an algorithm that analyses the degree of dirtiness of the dishes in real time, automatically sets the ideal temperature and washing time , optimising water and electricity consumption

Models with dirt sensor
(Only on some models).
The dishwasher is equipped with a dirt sensor, capable of analysing water murkiness during all ***"AUTOMATIC" programme phases (see programme legend)***. Thanks to this device, the wash cycle parameters are automatically adapted to the real quantity of dirt on dishes. This is because water murkiness is linked to the quantity of dirt on dishes. Thus, excellent washing results are guaranteed while optimising water and energy consumption.

"IMPULSE" programmes (only on some models)

The **"IMPULSE"** programmes use an impulse washing technology, which reduces **consumption and noise, and improves performance**.

The "intermittent" working of the washing pump is NOT to be considered a malfunction; it is a characteristic of impulse washing, and therefore should be considered a normal feature of the programme.

ADDISH (possibility of adding dishes after the programme has started)

When the programme **starts**, you should only open the door and add more dishes when the **ADDISH** indicator light is switched on. The appliance will stop automatically and the time remaining to the end of the cycle will flash on the display. Close the door, ***without pressing any buttons***.

Open the door slowly and carefully, to avoid getting wet with splashes of washing water.

Adding dishes after the ADDISH indicator light has switched off is strongly discouraged as this could affect the wash performance.

WARNING

If you open the door during the drying cycle, an intermittent audio signal advises you that the drying cycle has not yet finished.

Programme interruption

Opening the door when a programme is running is not recommended especially during the main wash and final hot rinse phases. However, if the door is opened while a programme is running (for example, to add dishes) the machine stops automatically. Close the door, **without pressing any buttons**. The cycle will start from where it left off.

⚠ WARNING:

If you open the door during the drying cycle, an intermittent audio signal advises you that the drying cycle has not yet finished.

Changing a running programme.

Proceed as follows to change or cancel a running program:

- Open the door.
- Keep the **Start/Reset** button pressed for at least **3** seconds. **"RESET"** will appear on the display and acoustic signals will be emitted.
- The running programme will be cancelled.
- At this point a new programme can be set using the **"Progr."** button.

⚠ WARNING:

Before starting a new programme, you should check that there is still detergent in the dispenser. If necessary, top up the detergent.

Programme end

A 5 second buzzer will sound (if not muted) 3 times at 30 second intervals to signal that the programme has ended.

Only for models with the "OPEN DOOR" option, during the drying phase the door will open automatically and you will have to wait until for the end-of-cycle signal before removing the dishes.

POWER WASH (only on some models)

In some programmes (see table of programmes), the third washing arm, positioned at the bottom of the dishwasher **POWER WASH**, will also be enabled. This feature is ideal when cleaning heavily soiled tableware or cookware, placing them directly in the area of the basket above the **POWER WASH** arm.

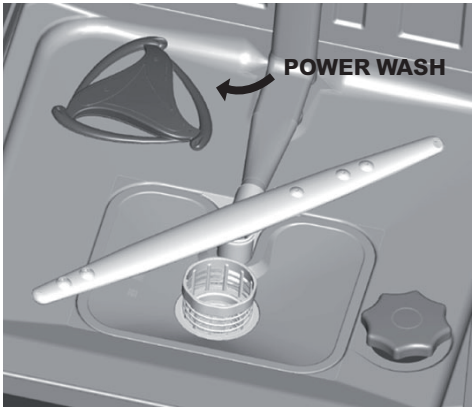

Option buttons

The option buttons provide you with further wash options, allowing you to customise the wash programmes (see the table in chapter 17 for a list of programmes on which each option can be enabled). Options are enabled (or disabled) before starting the programme, using the appropriate buttons. The relevant indicator lights will appear (or disappear) on the display.

The option button should be enabled after you have chosen the wash programme.

If an option is selected that is not compatible with the selected programme then the option indicator light first flashes and then goes off.

"Express" button (only on some models).
This button enables average energy and time savings of 25% (according to the cycle selected), reducing the wash water temperature and the drying time during the final rinse. This option is recommended for evening washing when perfectly dry dishes are not needed immediately. For better drying, leave the dishwasher door slightly ajar to promote natural air circulation in the dishwasher.

"OPEN DOOR" button " **(AUTOMATIC DOOR OPENING) (only on some models).**

This option enables a special device that opens the door by a few centimetres during or at the end of the drying cycle (depending on the programme). This ensures the natural and efficient drying of dishes. The duration of the selected cycle will automatically change to obtain the optimal temperature for the rinse cycle; this significantly reduces energy consumption. The automatic door opening during the last drying phase enables the air to circulate, removing the risk of bad odours.

When the door opens, the message **"OPEN DOOR"** will appear on the display.

This option is automatically enabled in the "ECO" programme. In any case, it is possible to disable it. The "OPEN DOOR" feature is not available in the "RAPID 29'", "RAPID 39'" and "PREWASH" programmes.

WARNING

With this option selected, you must not in any way prevent the door from opening or force it shut, as this would damage the mechanism. Ensure that there is free space in front of the door and, before closing, wait for the opening device to complete its activity.

"EXTRA DRY" button (only on some models).

This option allows you to achieve the highest efficiency in drying, increasing the wash water temperature during the last phase of the wash cycle.

"NO SALT" warning light

If your dishwasher requires salt, **"SALT"** will be displayed when selecting the programme. The appearance of whitish stains on dishes is generally a warning sign that the salt container needs filling.

In order to guarantee the correct functioning of the salt indicator light, YOU MUST ALWAYS FULLY REPLENISH THE SALT CONTAINER.

EN

"START DELAY" button

Dishwasher start time can be set with this button, delaying start from 1 to 23 hours. Proceed as follows to set a delayed start:

- Open the door.
- Turn on the dishwasher by pressing the **"ON/OFF"** button for about 3 sec.
- Select the washing programme.
- Press the **"START DELAY"** button (**"0:30"** will appear on the display).
- Press the button again to increase the delay (on each press the delay is increased by 30 mins., up to a maximum of 23:30.
- When the delay is set on a programme:
  - after pressing **"START/RESET"**, the countdown time “00:00” appears on the display with flashing “ : ”
  - if you press any button (except for the **"ON/OFF"**, **"Progr. per 3 sec"** buttons), the programme name is displayed for a single scroll on the display and then the delay time is displayed again.
  - When the time has elapsed, the programme name is displayed for a single scroll on the display and the remaining time will be displayed as **"0:00h".**
- To start the countdown, press the **Start/Reset** button. The display will show the time remaining to the end of the programme. At the end of the countdown, the programme will start automatically.

If the delayed start is not confirmed by pressing the "Start/Reset" button, after approx. 10 sec. the delayed start will be cancelled.

(Only for free-standing models)
The length of the selected cycle will be shown on the display. At the end of the countdown, the programme will automatically start and the length of the selected cycle will be shown on the display.

Proceed as follows to cancel a delayed start:

- Hold the **"Start/Reset"** button down for at least 3 seconds. "00" will appear on the display **"RESET"** and audible signals will sound.
- The delayed start and the selected programme will be cancelled. Two dashes will appear on the display.
- At this point, to set off the dishwasher, a new programme and any option buttons must be selected, as indicated in the **"PROGRAMME SETTINGS"** paragraph.

Activation/Muted END-OF-PROGRAMME signal.

You can deactivate turning on and off of the audio signal as follows (the default setting is active):

The dishwasher must ALWAYS be off before you start this procedure.

- Open the door.
- Turn on the dishwasher by holding the **"ON/OFF"** button down for about 3 secs.
- Hold down the **"Progr."** and **"ON/OFF"** buttons for about 5 secs.
- The message **"SETTINGS"** will appear on the display and the indicator lights of the **"OPEN DOOR/EXPRESS"** and **"EXTRA DRY"** buttons will be on.
- Pressing the **"Progr."** button until the **"BUZZER"** parameter is selected.
- Parameter adjustment is performed by pressing the **"OPEN DOOR/EXPRESS" (-)** and **"EXTRA DRY" (+)** buttons to change the value from YES to NO and vice versa.
- Switch off the dishwasher by pressing the **"ON/OFF"** button for 3 secs to confirm the new setting.

To turn the alarm on again, follow the same procedure.

MEMO FUNCTION (Memorising the last programme used)

The dishwasher must ALWAYS be off before you start this procedure.

- Open the door.
- Turn on the dishwasher by holding the **"ON/OFF"** button down for about 3 secs.
- Hold down the **"Progr."** and **"ON/OFF"** buttons for about 5 secs.
- The message **"SETTINGS"** will appear on the display and the indicator lights of the **"OPEN DOOR/EXPRESS"** and **"EXTRA DRY"** buttons will be on.
- Pressing the **"Progr."** button until the **"MEMO FUNCTION"** parameter is selected.
- Parameter adjustment is performed by pressing the **"OPEN DOOR/EXPRESS" (-)** and **"EXTRA DRY" (+)** buttons to change the value from **"MEMO MODE ON"** to **"MEMO MODE OFF"** and vice versa.
- Switch off the dishwasher by pressing the **"ON/OFF"** button for 3 secs to confirm the new setting.

To turn the alarm on again, follow the same procedure.

Enabling or disabling DEMO MODE (be used exclusively in stores)

Enabling

The dishwasher must ALWAYS be off before you start this procedure.

1. Open the door.
2. Turn on the appliance using the **ON/OFF** button.
3. Press the **Progr.** and **"START DELAY"** (23h) buttons together for 5 seconds.
4. **"DEMO MODE ON"** will appear on the display.
5. If no button is pressed for 30 seconds, the programme will start, simulating the start of a wash programme.

The Progr./Options/Start Delay options are enabled, and by pressing these buttons you can simulate the product's functioning without starting a wash.

Disabling "Demo mode"

WARNING

Once installed, if the appliance works correctly but the wash cycle does not start upon pressing the Start button, "Demo mode" may not have been disabled.

The dishwasher must ALWAYS be off before you start this procedure.

1. Open the door.
2. Turn on the appliance using the **On/Off** button.
3. Press the **Progr.** and **"START DELAY"** (23h) buttons together for 5 seconds.
4. **"DEMO MODE OFF"** will appear on the display.
5. Switch off the appliance.

EN

16. REMOTE CONTROL (WI-FI)

This appliance is equipped with **Wi-Fi** technology that allows the machine to be remote controlled via an app.

Pairing the machine with the app

- Download the ***Hoover Wizard*** app onto your device.

The *Hoover Wizard* app is available both for Android and for iOS tablets and smartphones.

To discover all the details of the Wi-Fi features, explore the app menus in DEMO mode.

- Make sure the router is turned on and your smartphone/tablet is connected to your home Wi Fi network.
- Turn on **BLUETOOTH** on your smartphone/tablet (if available).
- Open the app, create a user profile and enroll the appliance, following the instructions appearing on the device's display.
- Turn on the dishwasher with the **ON/OFF** button when instructed to do so in the app.
- Press **"Progr. 3sec WiFi"** for 3 secs → the message **"ENROLMENT"** will scroll on the display and the **"Wi-Fi"** indicator light will be off.
- Within 60 secs. keep the **"START DELAY"** button pressed for 3 secs., and the message **"EASY"** will appear on the display for 5 mins.
- Enter the password of your home WiFi network in the App and complete the procedure.

Successful enrollment

- The message **"CONNECTED"** will appear on the display once, after which the message **"REMOTE CONTROL"** will appear and the **"Wi-Fi"** indicator light will be steady on.
- You can now check the machine from the App.

Unsuccessful enrollment

If enrolment fails (or does not succeed within 5 mins.):

- **"TRY AGAIN"** will appear on the display.
- The machine will not be connected.
- Repeat the enrolment procedure from the App.

For more information, refer to the **"Enrollment App - Quick Guide"** that comes with your machine, also accessible at the link: **go.candy-group.com/am-dw**

Reset WiFi

Repeat the enrolment procedure, removing the product from the APP, in the event of problems or a change in your home router password.

ENABLING REMOTE CONTROL

Whenever you want to use the machine with remote control:

- Fill the dishwasher, add detergent.
- Turn on the dishwasher.
- Press **"Progr. 3sec WiFi"** for 3 secs. → The message **"REMOTE CONTROL"** will appear on the display.
- Close the door.
- You can now check the machine from the App.

DISABLING REMOTE CONTROL

- To exit remote control, press **"Progr. 3sec WiFi"** again for 3 secs.

- **When no cycle is under way:**

- The **Wi-Fi** indicator light will start to flash slowly and the message **"REMOTE CONTROL OFF"** will appear on the display.

- **When a cycle is under way:**

- The **Wi-Fi** indicator light will start to flash slowly and the message **"REMOTE CONTROL OFF"** will appear on the display.

- The message **"DOOR OPEN"** will appear on the display.

- The cycle will be completed without control from the App.

Alternative way to exit remote control.

- **Press the "Start/Reset" button for 3 secs**
  If there is a cycle under way, it will be cancelled, and the machine will exit **REMOTE CONTROL** mode.
  The **"Wi-Fi"** indicator light will flash slowly. It is now possible to set a new wash cycle from the control panel.

- **Press the "ON/OFF" button for 3 secs (or power off)**
  If there is a cycle under way, it will be paused and the machine will exit **REMOTE CONTROL** mode.
  On switching on again, the **"Wi-Fi"** indicator light will flash slowly and any cycle under way will continue from the point of interruption.

Opening the door, any REMOTE CONTROL will be disabled. To resume control from the App, close the door.

"Wi-Fi" indicator light

- Indicates the connection status of the product to the home Wi-Fi network. It can be:

  - **SLOW FLASHING:** remote control disabled.

  - **QUICK FLASHING FOR 3 SECONDS, THEN OFF:** the machine cannot connect to the home Wi-Fi network or has not yet been enrolled on the App.

  - **SLOWLY FLASHING 3 TIMES, THEN OFF FOR 2 SECONDS:** enrolment procedure on the App in progress.

17. PROGRAMME LEGEND

Programme			Description
P1		ECO	Programme for normally soiled tableware (the most efficient in terms of its combined energy and water consumption for that type of tableware). **Programme standardised to EN 50242**.
P2		STEAM	Cycle with alternated action of water jets and steam. Effective in softening and removing dried up soil and bacteria, with no need to pre-wash pots and dishes.
P3		NIGHT	Quietest washing cycle. Ideal for functioning by night and for taking advantage of reduced energy fares.
P4		UNIVERSAL	Once a day - for normal soiled pans and any other items that have been left all day for washing.
P5	 AUTO	AUTO DAILY WASH	Fast cycle, for “normally” dirty dishes – intended for frequent washes and normal loads. This programme is optimised thanks to a smart sensor that adapts washing parameters to actual dish load.
P6	TOTAL CARE		Programme suitable for **Class A** single-cycle washing of the most delicate crockery such as glassware and porcelain. * Suitable for washing dishes up to 8 place settings.
P7		RAPID 39'	Fast cycle, suitable for daily washing of heavily soiled items straight after a meal (MAX 8 place settings).
P8		RAPID 29'	Quick wash for dishes which are to be washed immediately after the meal. Wash load of 6 persons.
P9		PREWASH	Short cold pre-wash for items that are stored in the dishwasher until you are ready to wash a full load.

Programmes with prewash
For wash programmes with prewash, it is advisable to add a second dose of detergent (max. 10 g) directly in the machine.

Programme			Detergent for soaking (Prewash)	"IMPULSE" programmes	Washing temperature (°C)	Average wash duration [1] (min.)	Options		
							"EXPRESS" * Button	"OPEN DOOR" * Button	"EXTRA DRY" Button
P1	eco	ECO	●	▬	45	205	YES	YES	YES
P2		STEAM	●	■	75	130	YES	YES	YES
P3		NIGHT	▬	▬	55	240	YES	YES	N/A
P4		UNIVERSAL	●	■	60	120	YES	YES	YES
P5	AUTO	AUTO DAILY WASH	▬	▬	55-65	75-95	YES	YES	YES
P6	TOTAL CARE		●	■	50	100	YES	YES	YES
P7	R 39'	RAPID 39'	●	▬	60	39	YES	N/A	N/A
P8	R 29'	RAPID 29'	▬	▬	50	29	N/A	N/A	N/A
P9		PREWASH	▬	▬	▬	5	N/A	N/A	N/A

● = Add detergent for prewash

■ = **"IMPULSE"** Programmes

***= only on some models**

N/A= OPTION NOT AVAILABLE

1) With cold water (15°C) – Tollerance ±10%-
With hot water the time remaining until the end of the programme is automatically displayed while the programme is running.
*Values are measured in a laboratory according to European Standard EN 50242 (consumption may vary according to conditions of usage).

18. WATER SOFTENER UNIT

Depending on the source of the supply, water contains varying amounts of limestone and minerals which are deposited on the dishes leaving whitish stains and marks. The higher the level of these minerals present in the water, the harder the water is. The dishwasher is fitted with a water softener unit which, through the use of special regenerating salt, supplies softened water for washing the dishes. The degree of hardness of your water can be obtained from your water supply company.

Regulating the water softener

The water softener can treat water with a hardness level of up to 90 °fH (French grading) or 50 °dH (German grading) through 8 settings. The settings are listed in the table below, with the relative mains water to be treated.

Level	Water hardness		Use of Regenerating salt	Water softener setting
	°fH (Franch)	°dH (German)		
0	0-5	0-3	NO	S0
1	6-10	4-6	YES	S1
2	11-20	7-11	YES	S2
3	21-30	12-16	YES	S3
4*	31-40	17-22	YES	S4
5	41-50	23-27	YES	S5
6	51-60	28-33	YES	S6
7	61-90	34-50	YES	S7

**** The softener unit is set in the factory at level 4 (S4) as this satisfies the requirements of the majority of users.***

Regulate the setting of your water softener unit according to the degree of hardness of your water, as follows:

The dishwasher must ALWAYS be off before start of this procedure.

1. Turn on the dishwasher by pressing the **"ON/OFF"** button for about 3 secs.
2. Hold the **"Progr."** and **"ON/OFF"** buttons down for about 5 secs.
3. The message **"SETTINGS"** will appear on the display and the indicator lights of the **"OPEN DOOR/EXPRESS"** and **"EXTRA DRY"** buttons will be on.
4. Press the **"Progr."** button until you select **"SOFTENER S4"** (S4 factory level).
5. Parameter adjustment is performed by pressing the **"OPEN DOOR/EXPRESS" (S7 → S0) and "EXTRA DRY" (S0 → S7)** buttons to increase or decrease the previously set level.
6. Switch off the dishwasher by pressing the **"ON/OFF"** for 3 secs. button to confirm the new setting.

To change the water softener setting again, follow the same procedure.

⚠ WARNING

If you cannot complete the procedure, turn the dishwasher off by pressing the "ON/OFF" button and start the procedure again from the beginning (STEP 1).

19. TROUBLESHOOTING AND WARRANTY

If you believe the dishwasher is not working correctly, consult the quick guide provided below with some practical tips on how to fix the most common problems. **If the malfunction continues or recurs, contact the Technical Assistance Centre.**

BUG REPORTS

- **Models with a display:** errors are reported by a number preceded by the letter "E" (e.g. Error 2 = E2) and a short audio signal.
- **Models without a display:** an error is shown by a sequence of flashes of every LED. The error code is shown by the number of flashes followed by a pause of 5 seconds (example: two flashes – pause 5 seconds – two flashes – repeating = Error 2).

Only models with a display

Error displayed	**Meaning and solutions**
"CHECK WATER" with a short audio signal (only on some models). **E2** (with display) with a short audio signal	**The dishwasher does not fill with water**
	Make sure the water supply is open.
	Make sure the water supply hose is not bent or crushed.
	Make sure the drain pipe is at the proper height (see installation section).
	Close the water supply, unscrew the drain pipe from the back of the dishwasher and check that the "sand" filter is not clogged.
E3 (with display) with a short audio signal	**The dishwasher does not drain water**
	Make sure the drain pipe isn't bent, trapped or blocked, and the filter is not clogged.
	Make sure the siphon is not clogged.
E4 (with display) with a short audio signal	**Water leak**
	Make sure the drain pipe isn't bent, trapped or blocked, and the filter is not clogged.
	Make sure the siphon is not clogged.
E8-Ei (with display) with a short audio signal	**The water heating element is not working correctly or the filter plate is clogged**
	Clean the filter plate.
Any other code *(with display)*	Turn off and unplug the dishwasher, wait a minute. Turn on the machine and restart a program. If the error occurs again contact an Authorised Customer Service Centre directly.

Only models without a display

If malfunctions or faults occur when a programme is running, the indicator light that corresponds to the selected cycle will blink rapidly, and an intermittent audio signal will sound. In this case, turn the dishwasher off by pressing the **"ON/OFF"** button.
After checking to make sure the water supply is open, that the drain pipe is not bent and that the siphon or filters are not clogged, set the selected program again.
If the fault persists, contact the Technical Assistance Centre.

This dishwasher is equipped with an overflow safety device that, in the event of a problem, automatically discharges any excess water.

⚠ WARNING

To ensure the correct operation of the overflow safety device, we recommend not moving or tilting the dishwasher during operation. Should it be necessary to tilt or move the dishwasher, please ensure that the washing cycle is complete and that no water remains inside the appliance.

Other faults

FAULTS	CAUSE	SOLUTION
1. No programme works	Plug not connected to wall socket	Connect electric plug
	O/I button not pressed	Press button
	Door is open	Close door
	No electricity	Check
2. Dishwasher does not fill with water	See point 1	Check
	The water tap is closed	Open the water tap
	The water supply hose is bent	Eliminate the bends in the hose
	The filter of the water supply hose is clogged	Clean the filter at the end of the hose
3. Dishwasher does not discharge water	Filter is dirty	Clean filter
	Drain pipe is bent	Eliminate the bends in the pipe
	The drain pipe extension is not correctly connected	Follow the instructions for connecting the drain pipe carefully
	The outlet connection on the wall is pointing downwards not upwards	Call a qualified technician
4. Dishwasher discharges water continuously	Position of the drain pipe is too low	Lift drain pipe to at least 40 cm above floor level

FAULTS	CAUSE	SOLUTION
5. Spray arms are not heard to rotate	Excessive amount of detergent	Reduce amount of detergent Use suitable detergent
	Item prevents arms from rotating	Check
	Filtering plate and filter very dirty	Clean filtering plate and filter
6. On electronic appliances without a display: one or more indicator lights flashing quickly	Water supply tap turned off	Switch off the appliance. Turn on the tap. Re-set the cycle.
7. Dishes only partially washed	See point 5	Check
	Bottom of saucepans have not been washed well	Burnt on food remains must be soaked before putting pans in dishwasher
	Edge of saucepans have not been washed well	Reposition saucepans
	Spray arms are partially blocked	Remove spray arms by unscrewing ring nuts clockwise and wash under running water
	The dishes have not been loaded properly	Do not place the dishes too close together
	The end of the drain pipe is immersed in water	The end of the drain pipe must not come into contact with the outflow water
	An incorrect amount of detergent has been measured out, or the detergent is old and hard	Increase the measure according to how dirty the dishes are, or change detergent
	The cap of the salt container is not closed properly	Choose a more vigorous programme
	The wash programme is not thorough enough	Tighten it properly
8. Detergent not dispensed or partially dispensed	Cutlery, dishes, pans, etc., stop the detergent dispenser from opening	Position dishes so as not to obstruct the dispenser
9. Presence of white spots on dishes	Mains water is too hard	Check salt and rinse aid level and regulate. Should the fault persist, contact the Technical Assistance Centre
10. Noise during wash	The dishes knock against one another	Re-check loading of dishes in the basket
	The revolving arms knock against the dishes	Re-check loading of dishes in the basket
11. The dishes are not completely dry	Inadequate air flow	Leave the dishwasher door ajar at the end of the wash program to allow the dishes to dry naturally
	Rinse aid missing	Fill the rinse aid dispenser

N.B.: Should any of the above situations result in a bad wash performance or insufficient rinsing, remove dirt deposits from the dishes by hand since the final drying cycle hardens the dirt, making it difficult to remove with a subsequent wash.
If the malfunction continues, contact the Technical Assistance Centre, quoting the model of the dishwasher. This is found on the plate on the upper section of the inside of the dishwasher door, or on the warranty. This information will make it possible to take quicker, more effective action.

Assistance and Warranty
The product is guaranteed under the law, and under the terms and conditions stated on the warranty certificate included with the product. The certificate should be stored and shown to an authorized Technical Assistance Centre in case of need, together with the proof of purchase. You can also check the warranty conditions on our website.
For assistance, please fill in the online form or contact us at the number indicated on the support page of our website.

The manufacturer declines all responsibility for any printing errors in this booklet. Moreover, the manufacturer reserves the right to make any changes deemed useful to its products without changing their essential characteristics.

20. ENVIRONMENTAL CONDITIONS



This appliance is marked a cording to the European directive 2012/19/EUon Waste Electrical and Electronic Equipment (WEEE).

WEEE contains both polluting substances (which can cause negative consequences for the environment) and basic components (which can be re-used).

It is important to have WEEE subjected to specific treatments, in order to remove and dispose properly all pollutants, and recover and recycle all materials.

Individuals can play an important role in ensuring that WEEE does not become an environmental issue; it is

- WEEE should not be treated as household waste;
- WEEE should be handed over to the relevant collection points managed by the municipality or by registered companies. In many countries, for large WEEE, home collection could be present.

In many countries, when you buy a new appliance, the old one may be returned to the retailer who has to collect it free of charge on a one-to-one basis, as long as the equipment is of equivalent type and has the same functions as the supplied equipment.

A. WIRELESS PARAMETERS

	Wi-Fi			
	Specifications (Wi-Fi)	**Specifications**	**NFC**	**Wi-Fi (One Fi/Smart Fi)**
A	802.11 b/g/n	Bluetooth v4.2	ISO/IEC 14443 Type A and NFC Forum Type 4	802.11 b/g/n
B	2,412 GHz. - 2,484 GHz.	2,412 GHz. - 2,484 GHz.	13,553-13,567 MHz (centre frequency 13,560 MHz)	2,412 GHz. - 2,484 GHz.
C	802.11b, DSSS 1 Mbps = +19.5 dBm 802.11b, CCK 11 Mbps = +18.5 dBm 802.11g, OFDM 54 Mbps = +18.5 dBm 802.11n, MCS7 = +14 dBm	**Basic data Rate:** RF Transmit Power (Typ): +4 dBm **Enhanced data Rate:** RF Transmit Power (Typ): +2 dBm **BLE** RF Transmit Power (Typ): +7.5 dBm	–	802.11b (11Mbps) +18,5 ± 2 dBm 802.11g (54Mbps) +16 ± 2 dBm 802.11n (HT20, MCS7) +14 ± 2 dBm
D	802.11b = 1024 bytes, -80 dBm 802.11g = 1024 bytes, -70 dBm 802.11n = 1024 bytes, -65 dBm 802.11n HT40 = 1024 bytes, -65 dBm	**Basic data Rate:** Sensivity @ 0.1% BER: -98 dBm **Enhanced data Rate:** Sensivity @ 0.01% BER: -98 dBm **BLE** Sensivity @ 0.1% BER: -98 dBm	–	802.11b (11Mbps) -93 dBm 802.11g (54Mbps) -85 dBm 802.11n (HT20, MCS7) -82 dBm
E	–	–	< 42dBµA/m (at 10 m)	–

EN

WIRELESS PARAMETERS:

A Wireless Standard - **B** Frequency range - **C** Max Transmit Power - **D** Minimum Receiving Sensitivity - **E** Magnetic field limit

With this the Candy Hoover Group Srl, declares that this appliance marked with CE complies with the essential requirements of the Directive 2014/53/EU. To receive a copy of the declaration of conformity, please contact the manufacturer at: www.candy-group.

- HDIN D -