AEG

Induction Cooker
CIB6731ACM





Add steam for crispier baking
In addition to all your standard oven functions, the PlusSteam feature in this SteamBake cooker adds steam at the beginning of the baking process. The steam cooking keeps the dough moist on the surface to create a golden color and tasty crust, while the heart stays soft and tender. In addition to baking crispy and tasty breads,

In addition to all your standard oven functions, the PlusSteam feature in this SteamBake cooker adds steam at the beginning of the baking process. The steam cooking keeps the dough moist on the surface to create a golden color and tasty crust, while the heart stays soft and tender. In addition to baking crispy and tasty breads,

Product Benefits & Features



Extremely responsive and precise heat, with induction technology
Induction cooking is so responsive that you can adjust the heat instantly. Plus, it only heats the pan, so you get heat precisely where you need it.



Intelligent technology that makes cleaning more efficient
This oven's Cataluxe® cleaning system uses cutting-edge technology to deliver efficient results. Its catalytic lining absorbs the grease and cooking residue when heated to 230°C, making it easy to simply wipe away keeping your cooker perfectly clean.



Up-to-the-second knowledge of when your dish is ready
The minute-minder function on this cooker gives you closer control over the cooking process. It alerts you of the exact second when your pre-set cooking period ends.

Consistent results on both levels in your oven
With a fan and a heating element working efficiently together, the temperature within the oven is completely consistent on both levels.

Perfectly bake even the largest batches
The XL Baking Tray is larger than standard-sized baking trays, enabling you to turn out larger batches of sweet treats, with the satisfaction that every single one has been perfectly baked.

- Heat activated catalytic cleaning
- Auto-stop anti-tip chrome shelves
- Cooking timer
- Hob features:
- Child lock
- Residual heat indicators
- Top oven features include:
- Conventional cooking
- Main oven features include:
- Conventional cooking
- Base heat finishing
- Dual circuit variable grill
- Grill
- Cooling fan
- Isofront® plus triple glazed door
- Main oven energy class: A
- Top oven energy class: A

AEG

Induction Cooker
CIB6731ACM

Product Specification

Dimensions	894-912x600x600
Voltage	240
Total electricity loading, W	11300
Required Fuse	30
Cavity size	73
Volume usable, l	39
Largest Surface area	1330
Colour	Stainless steel
Cleaning	Catalytic
Cleaning Bottom Oven	Catalytic
Power Management	Between all induction zones, priority LSZ, Between zones on the same side
Energy class	A
Energy efficiency class	A
Energy consumption, conventional mode, kWh per cycle	0.95
Energy consumption, hot air, kWh/cycle	0.82
Energy consumption per EU standard cycle	0.75
Energy consumption, fan forced, kWh/cycle	0
Right front - Power/Diameter	1800/2800W/180mm
Right rear - Power/Diameter	1800/2800W/180mm
Dial	2300/3600W/210mm
Rear - Power/Diameter	1400/2500W/140mm
Tray types included	1 Dripping pan black enamel
Type of Trays - Bottom Oven	No
Grids	2 Flat shelf chromed wirework
Grids type - Bottom Oven	1 Grill pan grid chromed wirework, 1 Flat shelf chromed wirework
Runners	Grid Runners with Stop
Runners - Bottom Oven	Grid Runners with Stop
Gas supply: natural gas	No
Gas replacement	No
Gas replacement	No

PSGBCO190DE00003

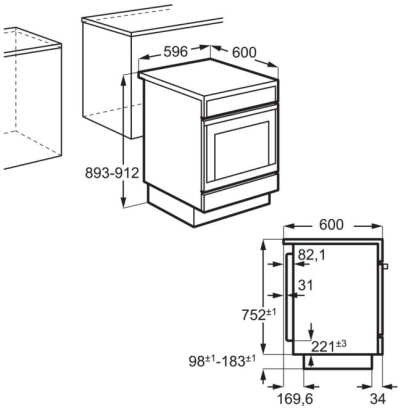

PSGBCO190DE00008

