AKL 307 IX

12NC: 859991542450

GTIN (EAN) code: 8003437231117



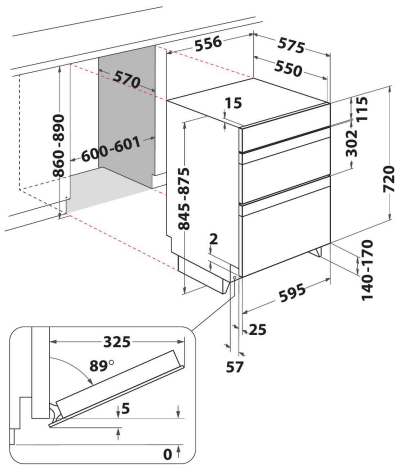

Whirlpool built in double oven: electric - AKL 307 IX

This Whirlpool built in Double Oven features: an electric solution to perfectly cook your dishes at their best.

Electronic Controls
Intuitive controls. This Whirlpool Double Oven includes a innovative and intuitive digital user interface, to effortlessly program your appliance's cooking functions. It also includes a timer, for added convenience.

Absolute aesthetic
The Absolute collection. Admire the beauty of performance. With a futuristic design and unparalleled performance, the Absolute collection is designed for modern, high-tech kitchens. Equipped with innovative 6TH SENSE technology, Absolute ovens can be set in three simple steps for perfect results. Maximum flexibility and ease of use with a distinctive look and original finishes.

Full Glass Inner Door
Effortless cleaning. The smooth, flat glass surface of this Whirlpool Double Oven's inner door provides the easiest possible cleaning experience.

Catalytic
Self-cleaning panels. The catalytic panels fitted inside the oven take care of any spills and splashes, eliminating them while cooking.

Push-Push knob
This Whirlpool Double Oven features modern Push-Push knobs, concealed within the control panel, providing a smooth, contemporary design.

- Energy class main cavity: A
- Energy class second cavity: A
- Inox Finishing
- Silver painted Plastic Push push knobs
- Main oven capacity 59 L
- Second oven capacity 37 L
- Defrost function
- Variable grill
- Available grill pan set

AKL 307 IX

12NC: 859991542450

GTIN (EAN) code: 8003437231117

Whirlpool
SENSING THE DIFFERENCE

MAIN FEATURES

Main colour of product	Inox
Construction type	Built-in
Type of control	Mechanical and electronic
Type of control settings	-
Are any hobs controls integrated?	No
Which kind of hobs can be controlled?	-
Current (A)	20
Voltage (V)	230-240
Frequency (Hz)	50/60
Length of Electrical Supply Cord (cm)	0
Plug type	No
Depth with open door 90 degree (mm)	-
Height of the product	860
Width of the product	595
Depth of the product	575
Minimum niche height	860
Minimum niche width	600
Niche depth	570
Net weight (kg)	50
Usable volume (of cavity) - NEW (2010/30/EU)	59
Usable volume (of cavity) - cavity 2 - NEW (2010/30/EU)	37
Integrated Cleaning system	Catalytic all sides
Integrated cleaning system of second cavity	Catalytic all sides
Grids of the cavity	2
Grids of the second cavity	0
Trays	3
Trays of second cavity	0

TECHNICAL FEATURES

Timer	Yes
Time control of second cavity	Electronic
Safety device	-
Interior light	Yes
Probe of the cavity	No
Probe of the second cavity	No

PERFORMANCES

Energy input	Electric
Type of energy of the cavity	Electricity
Type of energy of the second cavity	Electricity
Energy efficiency class	A
Energy efficiency class - cavity 2	A
Energy consumption conventional (kWh)	0
Energy consumption conventional (kWh) - cavity 2	0
Energy consumption forced air convection (kWh)	0
Energy consumption forced air convection (kWh) - cavity 2	0