ARG 137/A+.1

12NC: 859991556280

GTIN (EAN) code: 8003437042812

SENSING THE DIFFERENCE



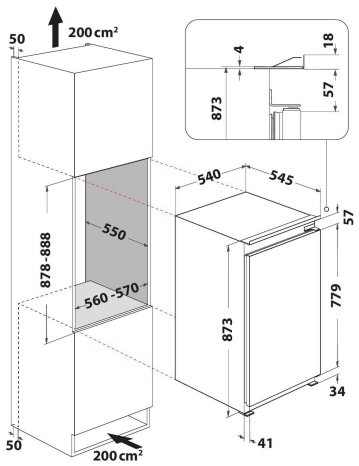

- Energy class: A+
- Total net capacity: 136 l
- Product dimensions (HxWxD): 873x540x545 mm
- Reversible door
- Noise level: 35 dB(A)
- Temperature adjustable
- Cooling System for Fridge Compartment: Static
- 3 adjustable balconies
- LED bulb lighting
- 1 drawer
- 3 shelves in fridge compartment
- Eletronic control
- Annual energy consumption 121 kWh/annum
- Slided mounted cover door installation system
- Total gross capacity: 136 l
- Steel Finishing
- Niche dimensions (HxWxD): 878 x 560 x 550 mm

Whirlpool integrated fridge - ARG 137/A+.1

This Whirlpool integrated Fridge features: dedicated bottle balcony.

35 dB(A)
With a noise level of 35 dB, this refrigerator guarantees a calm and quite ambient in the kitchen.

Auto Defrost
Effortless defrosting. Auto Defrost technology efficiently removes the build-up of ice in the fridge.

Electronic control system
Pitch-perfect performance. This Whirlpool Refrigerator features an Electronic control system that ensures correct parameter settings at all times, providing the ideal performance and temperature control.

115 - 185 l capacity
All the space you need. This Whirlpool Refrigerator is designed to provide all the space you need to comfortably store your food and drinks.

Energy class A+
Greater energy efficiency. With its A+ energy rating, this Whirlpool appliance will allow you to enjoy both ideal performance and excellent energy consumption.

Glass shelves
A passion for beauty in every detail. This Whirlpool Refrigerator includes toughened glass shelves with lipped edges that prevent spills, designed to combine beauty and functionality, and providing you the most fulfilling user experience imaginable.

LED lighting
Perfect illumination. Energy-efficient LEDs spread light evenly throughout the refrigerator cavity, making it easier to find what you're looking for.

Space Management
All the space you need. This Whirlpool Refrigerator's innovative design provides all the space and flexibility you need to comfortably and easily store your food and drink.

Reversible Door
For your convenience. This Whirlpool Refrigerator features a reversible door, that can be opened from left or right, for your convenience.

Bottle balcony
Safe storage. This Whirlpool Refrigerator provides perfect storage for your bottles, with its dedicated bottle balcony.

Bottle separator
Safe storage. This Whirlpool Refrigerator provides perfect storage for your bottles, with its bottle separator.

ARG 137/A+.1

12NC: 859991556280

GTIN (EAN) code: 8003437042812

Whirlpool
SENSING THE DIFFERENCE

MAIN FEATURES

Product group	Refrigerator
Commercial code	ARG 137/A+.1
GTIN (EAN) code	8003437042812
Construction type	Built-in
Installation type	Half-integrated
Type of control	Electronic
Type of control settings	LED
Main colour of product	Steel
Electrical connection rating (W)	75
Current (A)	13
Voltage (V)	220-240
Frequency (Hz)	50
Length of Electrical Supply Cord (cm)	200
Plug type	UK
Total unit net capacity (l)	136
Star Rating	Automatic
Number of independent cooling systems	1
Height of the product	873
Width of the product	540
Depth of the product	545
Depth with open door 90 degree (mm)	-
Maximum adjustability feet	0
Net weight (kg)	33
Door hinge	Right reversible

TECHNICAL FEATURES

Temperature adjustable	Yes
Warning signal / Malfunction	Visual
Defrost process fridge section	Automatic
Fast cooling possibility	N/A
Interior ventilator fridge section	No
Shelves for Bottles	No
Lockable door	-
Number of shelves in fridge compartment	3
Number of Adjustable Shelves in fridge compartment	2
Material of the shelves	Glass With Profile
Thermometer fridge section	None

PERFORMANCES

Energy efficiency class - NEW (2010/30/EU)	A+
Energy consumption annual (kWh/annum) - NEW (2010/30/EU)	121
Refrigerator Net capacity (l) - NEW (2010/30/EU)	136
Freezer Net capacity (l) - NEW (2010/30/EU)	0
Freezing capacity (kg/24h) - NEW (2010/30/EU)	0
Temperature rise time (h)	0
Climate class	SN-T
Noise level (dB(A) re 1 pW)	35
Frost free system	No
Maximum ambient temperature	43
Minimum ambient temperature	10

