DCB331010M

EN **User Manual**
Built-In Double Oven

# USER MANUAL

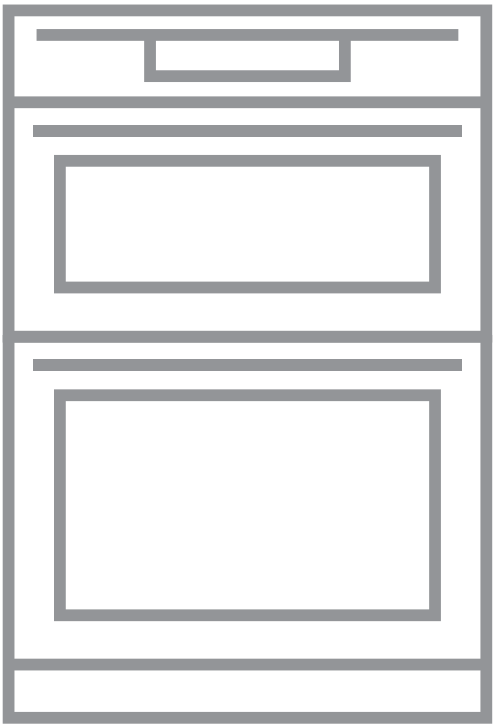

AEG

# CONTENTS

**1.** SAFETY INFORMATION....2
**2.** SAFETY INSTRUCTIONS....4
**3.** PRODUCT DESCRIPTION....6
**4.** CONTROL PANEL....7
**5.** BEFORE FIRST USE....7
**6.** DAILY USE....8
**7.** CLOCK FUNCTIONS....9
**8.** USING THE ACCESSORIES....11
**9.** ADDITIONAL FUNCTIONS....12
**10.** HINTS AND TIPS....12
**11.** CARE AND CLEANING....21
**12.** TROUBLESHOOTING....23
**13.** ENERGY EFFICIENCY....24

# FOR PERFECT RESULTS

Thank you for choosing this AEG product. We have created it to give you impeccable performance for many years, with innovative technologies that help make life simpler features you might not find on ordinary appliances. Please spend a few minutes reading to get the very best from it.
Visit our website for:

Get usage advice, brochures, trouble shooter, service information:
**www.aeg.com/webselfservice**

Register your product for better service:
**www.registeraeg.com**

Buy Accessories, Consumables and Original spare parts for your appliance:
**www.aeg.com/shop**

# CUSTOMER CARE AND SERVICE

Always use original spare parts.
When contacting our Authorised Service Centre, ensure that you have the following data available: Model, PNC, Serial Number.
The information can be found on the rating plate.

⚠ Warning / Caution-Safety information

ⓘ General information and tips

Environmental information

Subject to change without notice.

# 1. ⚠ SAFETY INFORMATION

Before the installation and use of the appliance, carefully read the supplied instructions. The

manufacturer is not responsible for any injuries or damages that are the result of incorrect installation or usage. Always keep the instructions in a safe and accessible location for future reference.

## 1.1 Children and vulnerable people safety

- This appliance can be used by children aged from 8 years and above and persons with reduced physical, sensory or mental capabilities or lack of experience and knowledge if they have been given supervision or instruction concerning the use of the appliance in a safe way and understand the hazards involved.
- Children between 3 and 8 years of age and persons with very extensive and complex disabilities shall be kept away unless continuously supervised.
- Children of less than 3 years of age should be kept away unless continuously supervised.
- Do not let children play with the appliance.
- Keep all packaging away from children and dispose of it appropriately.
- Keep children and pets away from the appliance when it operates or when it cools down. Accessible parts are hot.
- If the appliance has a child safety device, it should be activated.
- Children shall not carry out cleaning and user maintenance of the appliance without supervision.

## 1.2 General Safety

- Only a qualified person must install this appliance and replace the cable.
- WARNING: The appliance and its accessible parts become hot during use. Care should be taken to avoid touching heating elements.
- Always use oven gloves to remove or put in accessories or ovenware.
- Before carrying out any maintenance, disconnect the appliance from the power supply.

- Ensure that the appliance is switched off before replacing the lamp to avoid the possibility of electric shock.
- Do not use a steam cleaner to clean the appliance.
- Do not use harsh abrasive cleaners or sharp metal scrapers to clean the glass door since they can scratch the surface, which may result in shattering of the glass.
- If the mains power supply cable is damaged, it must be replaced by the manufacturer, its Authorised Service Centre or similarly qualified persons to avoid an electrical hazard.
- To remove the shelf supports first pull the front of the shelf support and then the rear end away from the side walls. Install the shelf supports in the opposite sequence.
- The means for disconnection must be incorporated in the fixed wiring in accordance with the wiring rules.

# 2. SAFETY INSTRUCTIONS

## 2.1 Installation

**WARNING!**
Only a qualified person must install this appliance.

- Remove all the packaging.
- Do not install or use a damaged appliance.
- Follow the installation instructions supplied with the appliance.
- Always take care when moving the appliance as it is heavy. Always use safety gloves and enclosed footwear.
- Do not pull the appliance by the handle.
- Keep the minimum distance from other appliances and units.
- Install the appliance in a safe and suitable place that meets installation requirements.
- The appliance is equipped with an electric cooling system. It must be operated with the electric power supply.

## 2.2 Electrical connection

**WARNING!**
Risk of fire and electric shock.

- All electrical connections should be made by a qualified electrician.
- The appliance must be earthed.
- Make sure that the parameters on the rating plate are compatible with the electrical ratings of the mains power supply.
- Always use a correctly installed shockproof socket.
- Do not use multi-plug adapters and extension cables.
- Make sure not to cause damage to the mains plug and to the mains cable. Should the mains cable need to be replaced, this must be carried out by our Authorised Service Centre.
- Do not let mains cables touch or come near the appliance door, especially when the door is hot.
- The shock protection of live and insulated parts must be fastened in

such a way that it cannot be removed without tools.
- Connect the mains plug to the mains socket only at the end of the installation. Make sure that there is access to the mains plug after the installation.
- If the mains socket is loose, do not connect the mains plug.
- Do not pull the mains cable to disconnect the appliance. Always pull the mains plug.
- Use only correct isolation devices: line protecting cut-outs, fuses (screw type fuses removed from the holder), earth leakage trips and contactors.
- The electrical installation must have an isolation device which lets you disconnect the appliance from the mains at all poles. The isolation device must have a contact opening width of minimum 3 mm.
- This appliance complies with the E.E.C. Directives.

## 2.3 Use

**WARNING!**
Risk of injury, burns and electric shock or explosion.

- This appliance is for household use only.
- Do not change the specification of this appliance.
- Make sure that the ventilation openings are not blocked.
- Do not let the appliance stay unattended during operation.
- Deactivate the appliance after each use.
- Be careful when you open the appliance door while the appliance is in operation. Hot air can release.
- Do not operate the appliance with wet hands or when it has contact with water.
- Do not apply pressure on the open door.
- Do not use the appliance as a work surface or as a storage surface.
- Open the appliance door carefully. The use of ingredients with alcohol can cause a mixture of alcohol and air.
- Do not let sparks or open flames to come in contact with the appliance when you open the door.
- Do not put flammable products or items that are wet with flammable products in, near or on the appliance.

**WARNING!**
Risk of damage to the appliance.

- To prevent damage or discoloration to the enamel:
  - do not put ovenware or other objects in the appliance directly on the bottom.
  - do not put aluminium foil directly on the bottom of cavity of the appliance.
  - do not put water directly into the hot appliance.
  - do not keep moist dishes and food in the appliance after you finish the cooking.
  - be careful when you remove or install the accessories.
- Discoloration of the enamel or stainless steel has no effect on the performance of the appliance.
- Use a deep pan for moist cakes. Fruit juices cause stains that can be permanent.
- This appliance is for cooking purposes only. It must not be used for other purposes, for example room heating.
- Always cook with the oven door closed.
- If the appliance is installed behind a furniture panel (e.g. a door) make sure the door is never closed when the appliance is in operation. Heat and moisture can build up behind a closed furniture panel and cause subsequent damage to the appliance, the housing unit or the floor. Do not close the furniture panel until the appliance has cooled down completely after use.

## 2.4 Care and cleaning

**WARNING!**
Risk of injury, fire, or damage to the appliance.

- Before maintenance, deactivate the appliance and disconnect the mains plug from the mains socket.
- Make sure the appliance is cold. There is the risk that the glass panels can break.
- Replace immediately the door glass panels when they are damaged. Contact the Authorised Service Centre.
- Be careful when you remove the door from the appliance. The door is heavy!
- Clean regularly the appliance to prevent the deterioration of the surface material.
- Clean the appliance with a moist soft cloth. Only use neutral detergents. Do not use any abrasive products, abrasive cleaning pads, solvents or metal objects.
- If you use an oven spray, follow the safety instruction on it's packaging.
- Do not clean the catalytic enamel (if applicable) with any kind of detergent.

## 2.5 Internal lighting

**WARNING!**
Risk of electric shock.

- The type of light bulb or halogen lamp used for this appliance is for household appliances only. Do not use it for house lighting.
- Before replacing the lamp, disconnect the appliance from the power supply.
- Only use lamps with the same specifications.

## 2.6 Service

- To repair the appliance contact an Authorised Service Centre.
- Use original spare parts only.

## 2.7 Disposal

**WARNING!**
Risk of injury or suffocation.

- Disconnect the appliance from the mains supply.
- Cut off the mains electrical cable close to the appliance and dispose of it.
- Remove the door catch to prevent children or pets from becoming trapped in the appliance.

# 3. PRODUCT DESCRIPTION

## 3.1 General overview

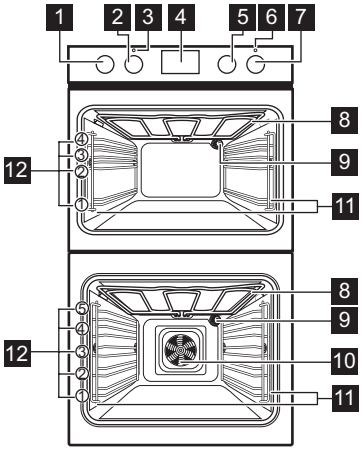


1 Knob for the top oven functions
2 Knob for the top oven temperature
3 Temperature indicator / symbol for the top oven
4 Display
5 Knob for the main oven functions
6 Temperature indicator / symbol for the main oven
7 Knob for the main oven temperature
8 Heating element
9 Lamp
10 Fan
11 Shelf support, removable
12 Shelf positions

### 3.2 Accessories

- **Wire shelf**
  For cookware, cake tins, roasts.
- **Grill- / Roasting pan**
  To bake and roast or as pan to collect fat.
- **Trivet**
  For roasting and grilling.

Use the trivet only with the Grill- / roasting pan.

## 4. CONTROL PANEL

### 4.1 Buttons

| Sensor field / Button | Function | Description |
|---|---|---|
| — | MINUS | To set the time. |
| ⏲ | CLOCK | To set a clock function. |
| + | PLUS | To set the time. |

### 4.2 Display

The display works only with the main oven.

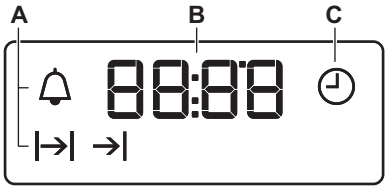


**A.** Clock functions
**B.** Timer
**C.** Clock function

## 5. BEFORE FIRST USE

**WARNING!**
Refer to Safety chapters.

To set the Time of day refer to "Clock functions" chapter.

### 5.1 Initial Cleaning

Remove all accessories and removable shelf supports from the oven.

Refer to "Care and cleaning" chapter.

Clean the oven and the accessories before first use.

Put the accessories and the removable shelf supports back to their initial position.

### 5.2 Preheating

Preheat the empty appliance to burn off the remaining grease.

Preheat the two ovens. Heat up one oven at a time. Set the functions listed below, if applicable.

1. Set the function and the temperature to 250°C.
   Let the appliance operate for 1 hour.

2. Set the function and the temperature to 250°C.
   Let the appliance operate for 15 minutes.
3. Set the function and the temperature to 250°C.
   Let the appliance operate for 15 minutes.

Accessories can become hotter than usual. The appliance can emit an odour and smoke. This is normal. Make sure that the airflow is sufficient.

# 6. DAILY USE

**WARNING!**
Refer to Safety chapters.

## 6.1 Retractable knobs

To use the appliance press the knob. The knob comes out.

## 6.2 Setting a heating function

1. Turn the knob for the heating functions to select a heating function.
2. Turn the control knob to select the temperature.

The lamp turns on when the oven operates.

3. To turn off the oven, turn the knob for the heating functions to the off position.

## 6.3 Top oven functions

| Oven function | | Application |
|---|---|---|
| | Light | To turn on the lamp without a cooking function. |
| | Conventional Cooking (Top / Bottom Heat) | To bake and roast food on one shelf position. |
| | Top Heat | To brown bread, cakes and pastries. To finish cooked dishes. |
| | Bottom Heat | To bake cakes with crispy bottom and to preserve food. |
| | Grilling | To grill flat food and to toast bread. |
| | Fast Grilling | To grill flat food in large quantities and to toast bread. |

## 6.4 Main oven functions

| Symbol | Oven function | Application |
|---|---|---|
| | Light | To turn on the lamp without a cooking function. |

| Symbol | Oven function | Application |
|---|---|---|
|  | True Fan Cooking | To bake on up to two shelf positions at the same time and to dry food.<br>Set the temperature 20 - 40 °C lower than for Conventional Cooking. |
|  | Pizza Setting | To bake pizza. To make intensive browning and a crispy bottom. |
|  | Conventional Cooking (Top / Bottom Heat) | To bake and roast food on one shelf position. |
|  | Bottom Heat | To bake cakes with crispy bottom and to preserve food. |
|  | Defrost | To defrost food (vegetables and fruit). The defrosting time depends on the amount and size of the frozen food. |
|  | Moist Baking | This function is designed to save energy during cooking. For the cooking instructions refer to "Hints and tips" chapter, Moist Baking. The oven door should be closed during cooking so that the function is not interrupted and to ensure that the oven operates with the highest energy efficiency possible. When you use this function, the temperature in the cavity may differ from the set temperature. The heating power may be reduced. For general energy saving recommendations refer to "Energy Efficiency" chapter, Energy Saving.This function was used to comply with the energy efficiency class according to EN 60350-1. When you use this function the lamp automatically turns off. |
|  | Grilling | To grill flat food and to toast bread. |
|  | Turbo Grilling | To roast larger meat joints or poultry with bones on one shelf position. To make gratins and to brown. |

# 7. CLOCK FUNCTIONS

## 7.1 Clock functions table

| Clock function | | Application |
|---|---|---|
|  | TIME OF DAY | To set, change or check the time of day. |
|  | DURATION | To set how long the appliance operates. |

| Clock function | | Application |
|---|---|---|
| →\| | END | To set when the appliance deactivates. |
| \|→\|→\| | TIME DELAY | To combine DURATION and END function. |
| 🔔 | MINUTE MINDER | To set countdown time. This function has no effect on the operation of the appliance. You can set the MINUTE MINDER at any time, also when the appliance is off. |

## 7.2 Setting the time. Changing the time

You must set the time before you operate the oven.

Only the top oven works without the set time.

The 🕘 flashes when you connect the appliance to the electrical supply, when there was a power cut or when the timer is not set.

Press the + or − to set the correct time.
After approximately five seconds, the flashing stops and the display shows the time of day you set.

To change the time of day press ⏲ again and again until 🕘 starts to flash.

## 7.3 Setting the DURATION

1. Set an oven function and temperature.
2. Press ⏲ again and again until |→| starts to flash.
3. Press + or − to set the DURATION time.

The display shows |→|.

4. When the time ends, |→| flashes and an acoustic signal sounds. The appliance deactivates automatically.
5. Press any button to stop the acoustic signal.
6. Turn the knob for the oven functions and the knob for the temperature to the off position.

DURATION works only for the main oven.

## 7.4 Setting the END

1. Set an oven function and temperature.
2. Press ⏲ again and again until →| starts to flash.
3. Press + or − to set the time.

The display shows →|.

4. When the time ends, →| flashes and an acoustic signal sounds. The appliance deactivates automatically.
5. Press any button to stop the signal.
6. Turn the knob for the oven functions and the knob for the temperature to the off position.

The function works only for the main oven.

## 7.5 Setting the TIME DELAY

1. Set an oven function and temperature.
2. Press ⏲ again and again until |→| starts to flash.
3. Press + or − to set the time for DURATION.
4. Press ⏲.
5. Press + or − to set the time for END.
6. Press ⏲ to confirm.

Appliance turns on automatically later on, works for the set DURATION time and stops at the set END time. At the set time an acoustic signal sounds.

7. The appliance deactivates automatically. Press any button to stop the signal.
8. Turn the knob for the oven functions and the knob for the temperature to the off position.

TIME DELAY works only for the main oven.

### 7.6 Setting the MINUTE MINDER

1. Press ⏲ again and again until 🔔 starts to flash.
2. Press + or − to set the necessary time.

The Minute Minder starts automatically after 5 seconds.

3. When the set time ends, an acoustic signal sounds. Press any button to stop the acoustic signal.
4. Turn the knob for the oven functions and the knob for the temperature to the off position.

### 7.7 Cancelling the clock functions

1. Press the ⏲ again and again until the necessary function indicator starts to flash.
2. Press and hold −.

The clock function goes out after some seconds.

## 8. USING THE ACCESSORIES

**WARNING!**
Refer to Safety chapters.

### 8.1 Inserting the accessories

Wire shelf:

Push the shelf between the guide bars of the shelf support .

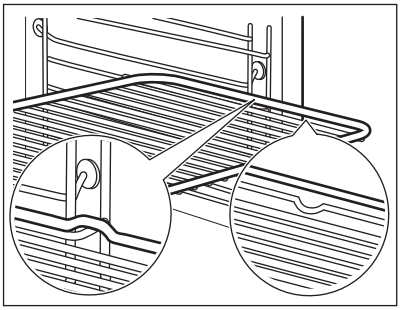

Deep pan:

Push the deep pan between the guide bars of the shelf support.

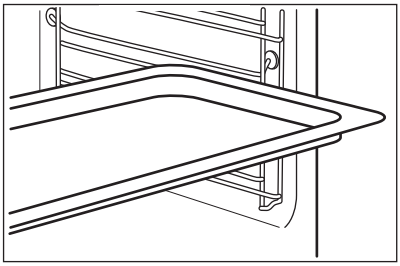

Wire shelf and deep pan together:

Push the deep pan between the guide bars of the shelf support and the wire shelf on the guide bars above.

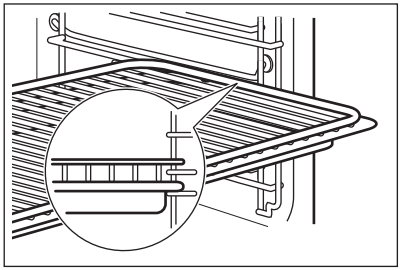

Small indentation at the top increase safety. The indentations are also anti-tip devices. The high rim around the shelf prevents cookware from slipping of the shelf.

### 8.2 Trivet and Grill- / Roasting pan

**WARNING!**
Be careful when you remove the accessories from a hot oven. There is a risk of burns.

You can use the trivet to roast larger pieces of meat or poultry on one shelf position.

1. Put the trivet into the deep pan so that the supports of the wire shelf point up.

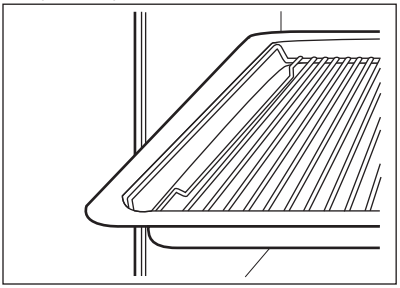

2. Put the deep pan into the oven on the necessary shelf position.

You can use the trivet to grill flat dishes in large quantities and to toast.

1. Put the trivet into the deep pan so that the supports of the wire shelf point down.

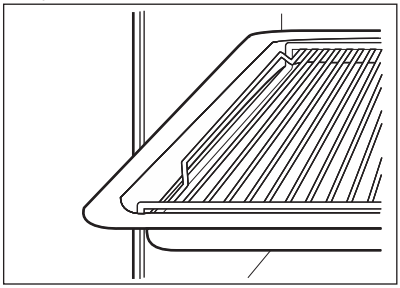

2. Put the deep pan into the oven on the necessary shelf position.

# 9. ADDITIONAL FUNCTIONS

## 9.1 Cooling fan

When the oven operates, the cooling fan turns on automatically to keep the surfaces of the oven cool. If you turn off the oven, the cooling fan can continues to operate until the oven cools down.

# 10. HINTS AND TIPS

**WARNING!**
Refer to Safety chapters.

The temperature and baking times in the tables are guidelines only. They depend on the recipes and the quality and quantity of the ingredients used.

## 10.1 Double oven

**Top oven**
The top oven is the smaller of the two ovens. It has 4 shelf positions. Use it to cook smaller quantities of food. It gives especially good results when used to cook fruitcakes, sweets and savoury flans or quiche.

**Main oven**
The main oven is the bigger of the two ovens. It is particularly suitable for cooking larger quantities of food.

## 10.2 Baking

- Use the lower temperature the first time.
- You can extend baking times by 10 – 15 minutes if you bake cakes on more than one shelf position.
- Cakes and pastries at different heights do not always brown equally. There is no need to change the temperature setting if an unequal browning occurs. The differences equalize during baking.
- Trays in the oven can twist during baking. When the trays become cold again, the distortions disappear.

## 10.3 Tips on baking

| Baking results | Possible cause | Remedy |
|---|---|---|
| The bottom of the cake is not browned sufficiently. | The shelf position is incorrect. | Put the cake on a lower shelf. |
| The cake sinks and becomes soggy, lumpy or streaky. | The oven temperature is too high. | The next time you bake, set a slightly lower oven temperature. |
| | The baking time is too short. | Set a longer baking time. You cannot decrease baking times by setting higher temperatures. |
| | There is too much liquid in the mixture. | Use less liquid. Be careful with mixing times, especially if you use a mixing machine. |
| The cake is too dry. | The oven temperature is too low. | The next time you bake, set a higher oven temperature. |
| | The baking time is too long. | The next time you bake, set a shorter baking time. |
| The cake browns unevenly. | The oven temperature is too high and the baking time is too short. | Set a lower oven temperature and a longer baking time. |
| | The mixture is unevenly distributed. | Spread the mixture evenly on the baking tray. |
| The cake is not ready in the baking time given. | The oven temperature is too low. | The next time you bake, set a slightly higher oven temperature. |

## 10.4 Baking

To bake in the top oven use the function Conventional Cooking.

Top oven

| Food | Temperature (°C) | Time (min) | Shelf position |
|---|---|---|---|
| Biscuits | 170 - 190 | 10 - 20 | 2 |
| Bread | 200 - 220 | 30 - 35 | 1 |
| Bread rolls / buns | 170-180 | 10 - 15 | 1 |
| **Cakes:** | | | |
| - Small & Queen | 160 - 170 | 18 - 25 | 2 |
| - Sponges | 160 - 175 | 20 - 30 | 2 |
| - Victoria Sandwich | 160 - 170 | 18 - 25 | 2 |
| - Madeira | 140 - 150 | 75 - 90 | 2 |

| Food | Temperature (°C) | Time (min) | Shelf position |
|---|---|---|---|
| - Rich Fruit | 140 - 150 | 120 - 150 | 2 |
| - Gingerbread | 140 - 150 | 75 - 90 | 2 |
| - Meringues | 90 - 100 | 150 - 180 | 2 |
| - Flapjack | 160 - 170 | 25 - 30 | 2 |
| - Shortbread | 130 - 150 | 45 - 65 | 2 |
| **Casseroles:** | | | |
| - Beef / Lamb | 160 - 170 | 150 - 180 | 1 |
| - Chicken | 160 - 180 | 75 - 90 | 1 |
| Convenience Foods | Follow manufacturer's instructions. | | |
| Fish | 170 - 190 | 20 - 30 | 2 |
| Fish Pie (Potato Topped) | 190 - 200 | 20 - 30 | 2 |
| Fruit Pies, Crumbles | 190 - 200 | 30 - 50 | 2 |
| Milk Puddings | 150 - 170 | 90 - 120 | 2 |
| Pasta, Lasagne etc. | 170 - 180 | 40 - 50 | 2 |
| **Pastry:** | | | |
| - Choux | 180 - 190 | 30 - 40 | 2 |
| - Eclairs, Profiteroles | 180 - 190 | 30 - 40 | 2 |
| - Flaky / Puff Pies | 210 - 220 | 30 - 40 | 2 |
| **Shortcrust:** | | | |
| - Mince Pies | 190 - 210 | 15 - 20 | 2 |
| - Meat Pies | 190 - 210 | 25 - 35 | 2 |
| - Quiche, Tarts, Flans | 180 - 200 | 25 - 50 | 2 |
| Scones | 220 - 230 | 8 - 12 | 2 |
| Shepard's Pie | 180 - 190 | 30 - 40 | 2 |
| Souffles | 190 - 200 | 20 - 30 | 2 |
| **Vegetables:** | | | |
| - Baked Jacket Potatoes | 180 - 190 | 60 - 90 | 2 |
| - Roast Potatoes | 180 - 190 | 60 - 90 | 2 |
| **Yorkshire Pudding:** | | | |
| - Large | 200 - 210 | 25 - 40 | 1 |

| Food | Temperature (°C) | Time (min) | Shelf position |
|---|---|---|---|
| - Individual | 210 - 220 | 15 - 25 | 1 |

Main oven

| Food | Temperature (°C) | | Time (min) | Shelf position |
|---|---|---|---|---|
| | Conventional Cooking | True Fan Cooking | | |
| Biscuits | 180 - 190 | 180 - 190 | 10 - 20 | 2 |
| Bread | 200 - 220 | 190 - 210 | 30 - 35 | 2 |
| **Cakes:** | | | | |
| - Small & Queen | 170 - 180 | 160 - 170 | 18 - 25 | 2 |
| - Sponges | 170 - 180 | 160 - 170 | 20 - 25 | 2 |
| - Madeira | 150 - 160 | 140 - 160 | 60 - 75 | 2 |
| - Rich Fruit | 140 - 150 | 130 - 140 | 120 - 150 | 2 |
| - Christmas | 140 - 150 | 130 - 140 | 180 - 270 | 2 |
| Fish | 170 - 180 | 160 - 180 | 20 - 30 | 3 |
| Fruit Pies, Crumbles | 180 - 200 | 170 - 180 | 30 - 50 | 3 |
| Milk Puddings | 150 - 170 | 140 - 160 | 60 - 90 | 3 |
| **Pastry:** | | | | |
| - Choux | 180 - 190 | 180 - 190 | 30 - 40 | 3 |
| - Shortcrust | 190 - 200 | 180 - 190 | 25 - 35 | 3 |
| - Flaky | 190 - 210 | 180 - 190 | 30 - 40 | 3 |
| - Puff | Follow manufacturer's instructions. Reduce the temperature by 20°C for True Fan Cooking Function. | | | |
| Plate Tarts | 190 - 200 | 180 - 190 | 25 - 45 | 3 |
| Quiches / Flans | 200 - 210 | 170 - 180 | 25 - 45 | 3 |
| Scones | 220 - 230 | 210 - 230 | 8 - 12 | 2 |

## 10.5 Moist Baking

For best results follow suggestions listed in the table below.

| Food | Accessories | Temperature (°C) | Shelf position | Time (min) |
|---|---|---|---|---|
| Sweet rolls, 16 pieces | baking tray or dripping pan | 180 | 2 | 40 - 50 |
| Pizza, frozen, 0.35 kg | wire shelf | 220 | 3 | 35 - 45 |
| Swiss roll | baking tray or dripping pan | 180 | 2 | 40 - 50 |
| Brownie | baking tray or dripping pan | 180 | 2 | 40 - 50 |
| Soufflè, 6 pieces | ceramic ramekins on wire shelf | 200 | 3 | 55 - 65 |
| Sponge flan base | flan base tin on wire shelf | 170 | 2 | 35 - 45 |
| Victoria Sandwich | baking dish on wire shelf | 160 | 2 | 45 - 55 |
| Poached fish, 0.3 kg | baking tray or dripping pan | 180 | 3 | 30 - 40 |
| Whole fish, 0.2 kg | baking tray or dripping pan | 180 | 3 | 30 - 40 |
| Fish fillet, 0.3 kg | pizza pan on wire shelf | 180 | 3 | 40 - 50 |
| Poached meat, 0.25 kg | baking tray or dripping pan | 200 | 3 | 30 - 40 |
| Shashlik, 0.5 kg | baking tray or dripping pan | 180 | 2 | 30 - 40 |
| Cookies, 16 pieces | baking tray or dripping pan | 180 | 2 | 35 - 45 |
| Macaroons, 24 pieces | baking tray or dripping pan | 160 | 2 | 35 - 45 |
| Muffins, 12 pieces | baking tray or dripping pan | 180 | 2 | 40 - 50 |
| Savory pastry, 20 pieces | baking tray or dripping pan | 180 | 2 | 35 - 45 |
| Short crust biscuits, 20 pieces | baking tray or dripping pan | 150 | 2 | 35 - 45 |
| Tartlets, 8 pieces | baking tray or dripping pan | 180 | 2 | 35 - 45 |
| Poached vegetables, 0.4 kg | baking tray or dripping pan | 180 | 3 | 40 - 50 |

| Food | Accessories | Temperature (°C) | Shelf position | Time (min) |
|---|---|---|---|---|
| Vegetarian omelette | pizza pan on wire shelf | 200 | 3 | 40 - 50 |
| Vegetables, mediterrean 0.7 kg | baking tray or dripping pan | 180 | 4 | 45 - 55 |

## 10.6 Pizza Setting

Main oven

| Food | Temperature (°C) | Time (min) | Shelf position |
|---|---|---|---|
| Apple Pie | 160 - 180 | 50 - 60 | 3 |
| Plate Tart | 180 - 200 | 25 - 50 | 3 |
| Pizza | Follow manufacturer's instructions. | | 3 |
| Quiches / Tarts | 180 - 200 | 25 - 50 | 3 |

## 10.7 Roasting

Use heat-resistant ovenware.

Roast large roasting joints directly in the tray or on the wire shelf placed above the tray.

Put some water in the tray to prevent the meat juices or fat from burning.

Meat with crackling can be roasted in the roasting tin without the lid.

Turn the roast after 1/2 - 2/3 of the cooking time.

To keep meat more succulent:

- roast lean meat in the roasting tin with the lid or use roasting bag.
- roast meat and fish in large pieces (1 kg or more).
- baste large roasts and poultry with their juices several times during roasting.

## 10.8 Roasting tables - Main oven

Beef

| Food | Quantity | Temperature (°C) | Time (min) | Shelf position |
|---|---|---|---|---|
| Roast beef or fillet: rare | per cm of thickness | 190 - 200[1)] | 5 - 6 | 2 |
| Roast beef or fillet: medium | per cm of thickness | 180 - 190[1)] | 6 - 8 | 2 |
| Roast beef or fillet: well done | per cm of thickness | 170 - 180[1)] | 8 - 10 | 2 |

1) Preheat the oven.

Pork

| Food | Quantity (kg) | Temperature (°C) | Time (min) | Shelf position |
|---|---|---|---|---|
| Shoulder, neck, ham | 1 - 1.5 | 160 - 180 | 90 - 120 | 2 |
| Pork chop | 1 - 1.5 | 160 - 180 | 60 - 90 | 2 |
| Meat loaf | 0.75 - 1 | 160 - 170 | 45 - 60 | 2 |
| Knuckle of pork (precooked) | 0.75 - 1 | 150 - 170 | 90 - 120 | 2 |

Veal

| Food | Quantity (kg) | Temperature (°C) | Time (min) | Shelf position |
|---|---|---|---|---|
| Roast veal | 1 | 160 - 180 | 90 - 120 | 2 |
| Knuckle of veal | 1.5 - 2 | 160 - 180 | 120 - 150 | 2 |

Lamb

| Food | Quantity (kg) | Temperature (°C) | Time (min) | Shelf position |
|---|---|---|---|---|
| Leg of lamb, roast lamb | 1 - 1.5 | 150 - 170 | 75 - 120 | 2 |
| Saddle of lamb | 1 - 1.5 | 160 - 180 | 60 - 90 | 2 |

Game

| Food | Quantity (kg) | Temperature (°C) | Time (min) | Shelf position |
|---|---|---|---|---|
| Saddle of hare, leg of hare | Up to 1 kg | 220 - 250 | 25 - 40 | 2 |
| Loin of Game | 1.5 - 2 | 210 - 220 | 75 - 105 | 1 |
| Leg of Game | 1.5 - 2 | 200 - 210 | 90 - 135 | 1 |

Poultry

| Food | Quantity (kg) | Temperature (°C) | Time (min) | Shelf position |
|---|---|---|---|---|
| Poultry pieces | 0.2 - 0.25 each | 200 - 220 | 35 - 50 | 3 |
| Half chicken | 0.4 - 0.5 each | 190 - 210 | 35 - 50 | 3 |
| Poultry | 1 - 1.5 | 190 - 210 | 45 - 75 | 1 |
| Duck | 1.5 - 2 | 180 - 200 | 75 - 100 | 1 |
| Goose | 3.5 - 5 | 160 - 180 | 150 - 210 | 1 |

| Food | Quantity (kg) | Temperature (°C) | Time (min) | Shelf position |
|---|---|---|---|---|
| Turkey | 2.5 - 3.5 | 160 - 180 | 105 - 150 | 1 |
| Turkey | 4 - 6 | 140 - 160 | 150 - 240 | 1 |

Fish (steamed)

| Type of meat | Quantity (kg) | Temperature (°C) | Time (min) | Shelf position |
|---|---|---|---|---|
| Whole fish | 1 - 1.5 | 210 - 220 | 40 - 60 | 1 |

## 10.9 Grilling

Always grill with the maximum temperature setting.

Set the shelf into the shelf position as recommended in the grilling table.

For grilling in the top oven adjust the shelf position to suit different thicknesses of food.

Always set the pan to collect the fat into the first shelf position.

Grill only flat pieces of meat or fish.

Always preheat the empty oven with the grill functions for 5 minutes.

**CAUTION!**
Always grill with the oven door closed.

Grilling and Fast Grilling - Top oven

| Food | Time (min) |
|---|---|
| Bacon Rashers | 5 -6 |
| Beefburgers | 10 - 20 |
| Chicken Joints | 20 - 40 |
| Lamb Chops | 15 - 25 |
| Pork Chops | 20 - 25 |
| Whole Fish, Trout / Makarel | 10 - 12 |
| Fillets, Plaice / Cod | 4 - 6 |
| Kebabs | 12 - 18 |
| Kidneys, Lamb / Pig | 6 - 10 |
| Sausages | 20 - 30 |
| Toasted Sandwiches | 3 - 4 |
| **Steaks:** | |
| - Rare | 4 - 6 |
| - Medium | 6 - 8 |

| Food | Time (min) |
|---|---|
| - Well Done | 12 - 15 |

Grilling - Main oven

| Food | Temperature (°C) | Time (min) | | Shelf position |
|---|---|---|---|---|
| | | 1st side | 2nd side | |
| Roast beef | 210 - 230 | 30 - 40 | 30 - 40 | 2 |
| Filet of beef | 230 | 20 - 30 | 20 - 30 | 3 |
| Back of pork | 210 - 230 | 30 - 40 | 30 - 40 | 2 |
| Back of veal | 210 - 230 | 30 - 40 | 30 - 40 | 2 |
| Back of lamb | 210 - 230 | 25 - 35 | 20 - 25 | 3 |
| Whole Fish, 500 - 1000 g | 210 - 230 | 15 - 30 | 15 - 30 | 3 / 4 |

## 10.10 Defrost - Main oven

Remove the food packaging and put the food on a plate.

Use the first shelf position from the bottom.

Do not cover the food with a bowl or a plate, as this can extend the defrost time.

| Food | Quantity (kg) | Defrosting time (min) | Further defrosting time (min) | Comments |
|---|---|---|---|---|
| Chicken | 1 | 100 - 140 | 20 - 30 | Put the chicken on an upturned saucer in a big plate. Turn halfway through. |
| Meat | 1 | 100 - 140 | 20 - 30 | Turn halfway through. |
| Meat | 0.5 | 90 - 120 | 20 - 30 | Turn halfway through. |
| Trout | 0.15 | 25 - 35 | 10 - 15 | - |
| Strawberries | 0.3 | 30 - 40 | 10 - 20 | - |
| Butter | 0.25 | 30 - 40 | 10 - 15 | - |
| Cream | 2 x 0.2 | 80 - 100 | 10 - 15 | Whip the cream when still slightly frozen in places. |
| Gateau | 1.4 | 60 | 60 | - |

# 11. CARE AND CLEANING

**WARNING!**
Refer to Safety chapters.

## 11.1 Notes on cleaning

Clean the front of the oven with a soft cloth with warm water and a mild cleaning agent.

To clean metal surfaces, use a dedicated cleaning agent.

Clean the oven interior after each use. Fat accumulation or other food remains may result in a fire. The risk is higher for the grill pan.

Clean all accessories after each use and let them dry. Use a soft cloth with warm water and a cleaning agent. Do not clean the accessories in the dishwasher.

Clean stubborn dirt with a special oven cleaner. Do not apply oven cleaner on the catalytic surfaces.

If you have nonstick accessories, do not clean them using aggressive agents, sharp-edged objects or a dishwasher. It can cause damage to the nonstick coating.

Clean the moisture from the cavity after each use.

## 11.2 Stainless steel or aluminium ovens

Clean the oven door with a damp cloth or sponge only. Dry it with a soft cloth.

Do not use steel wool, acids or abrasive materials as they can damage the oven surface. Clean the oven control panel with the same precautions.

## 11.3 Removing the shelf supports

To clean the oven, remove the shelf supports.

**CAUTION!**
Be careful when you remove the shelf supports.

1. Pull the front of the shelf support away from the side wall.

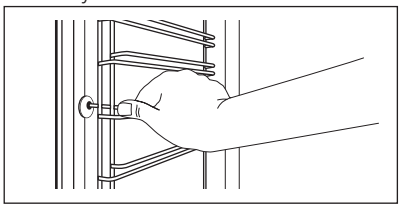

2. Pull the rear end of the shelf support away from the side wall and remove it.

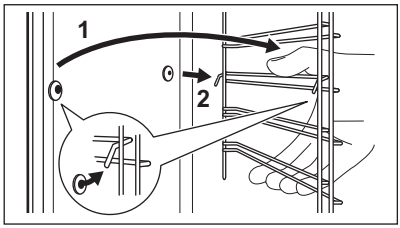


Install the removed accessories in the opposite sequence.

## 11.4 Catalytic cleaning

The cavity with a catalytic coating is self-cleaning. It absorbs fat.

Before you turn on the catalytic cleaning:

- remove all the accessories and removable shelf supports.
- clean the oven floor with warm water and mild detergent.
- clean the inner door glass with warm water and soft cloth.

1. Set the function .
2. Set the oven temperature to 250 °C and let the oven operate for 1 hour.
3. Turn off the oven.
4. When the oven cools down, clean the cavity with a wet soft cloth.

Spots or discolouration of the catalytic coating have no effect on Catalytic cleaning.

## 11.5 Removing and installing the door

You can remove the door and the internal glass panels to clean it. The

number of glass panels is different for different models.

**WARNING!**
The door is heavy.

1. Open the door fully.
2. Fully lift up the clamping levers (A) on the two door hinges.

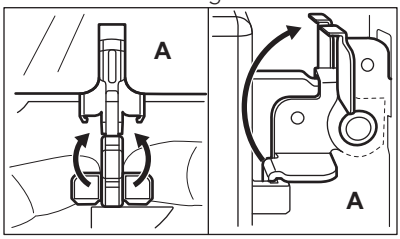


3. Close the door until it is at an angle of approximately 45°.

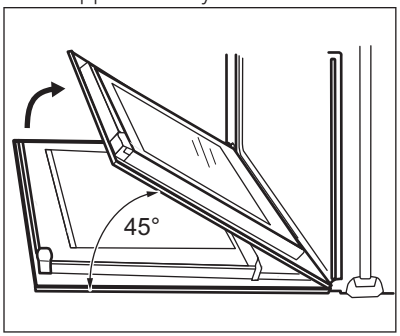


4. Hold the door with one hand on each side and pull it away from the oven at an upwards angle.
5. Put the door with the outer side down on a soft cloth on a stable surface.
6. Hold the door trim (B) on the top edge of the door at the two sides and push inwards to release the clip seal.

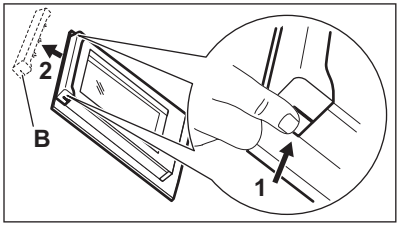


**CAUTION!**
Rough handling of the glass, especially around the edges of the front panel, can cause the glass to break.

7. Pull the door trim to the front to remove it.
8. Hold the door glass panels on their top edge one by one and pull them up out of the guide.

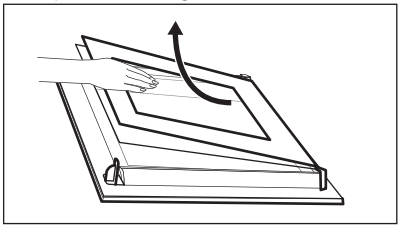

9. Clean the glass panel with water and soap. Dry the glass panel carefully.

When the cleaning is completed, do the above steps in the opposite sequence. Install the smaller panel first, then the larger and the door.

**WARNING!**
Make sure that the glasses are inserted in the correct position otherwise the surface of the door may overheat.

## 11.6 Replacing the lamp

**WARNING!**
Risk of electric shock.
The lamp can be hot.

1. Turn off the oven.

Wait until the oven is cooled down.

2. Disconnect the oven from the mains.
3. Put a cloth on the bottom of the cavity.

### The back lamp

The lamp glass cover is at the back of the cavity.

1. Turn the lamp glass cover counterclockwise to remove it.
2. Clean the glass cover.

3. Replace the oven lamp with a suitable 300 °C heat-resistant oven lamp. Use the same oven lamp type.
4. Install the glass cover.

# 12. TROUBLESHOOTING

**WARNING!**
Refer to Safety chapters.

## 12.1 What to do if...

| Problem | Possible cause | Remedy |
|---|---|---|
| You cannot activate or operate the oven. The display shows “400” and an acoustic signal sounds. | The oven is incorrectly connected to an electrical supply. | Check if the oven is correctly connected to the electrical supply (refer to the connection diagram if available). |
| The oven does not heat up. | The oven is deactivated. | Activate the oven. |
| The oven does not heat up. | The clock is not set. | Set the clock. |
| The oven does not heat up. | The necessary settings are not set. | Make sure that the settings are correct. |
| The oven does not heat up. | The fuse is blown. | Make sure that the fuse is the cause of the malfunction. If the fuse is blown again and again, contact a qualified electrician. |
| The lamp does not operate. | The lamp is defective. | Replace the lamp. |
| Steam and condensation settle on the food and in the cavity of the oven. | You left the dish in the oven for too long. | Do not leave the dishes in the oven for longer than 15 - 20 minutes after the cooking process ends. |
| The display shows "12.00". | There was a power cut. | Reset the clock. |

## 12.2 Service data

If you cannot find a solution to the problem yourself, contact your dealer or an Authorised Service Centre.

The necessary data for the service centre is on the rating plate. The rating plate is on the front frame of the oven cavity. Do not remove the rating plate from the oven cavity.

| We recommend that you write the data here: | |
|---|---|
| Model (MOD.) | ..... |
| Product number (PNC) | ..... |

| We recommend that you write the data here: | |
|---|---|
| Serial number (S.N.) | ..... |

# 13. ENERGY EFFICIENCY

## 13.1 Product Fiche and information according to EU 65-66/2014

| | |
|---|---|
| Supplier's name | AEG |
| Model identification | DCB331010M |
| Energy Efficiency Index | Top oven: 106.8<br>Main oven: 95.1 |
| Energy efficiency class | Top oven: A<br>Main oven: A |
| Energy consumption with a standard load, conventional mode | Top oven: 0.78 kWh/cycle<br>Main oven: 0.94 kWh/cycle |
| Energy consumption with a standard load, fan-forced mode | Top oven: not applicable<br>Main oven: 0.77 kWh/cycle |
| Number of cavities | 2 |
| Heat source | Electricity |
| Volume | Top oven: 42 l<br>Main oven: 61 l |
| Type of oven | Built-In Oven |
| Mass | 50.5 kg |

EN 60350-1 - Household electric cooking appliances - Part 1: Ranges, ovens, steam ovens and grills - Methods for measuring performance.

## 13.2 Energy saving

The oven contains features which help you save energy during everyday cooking.

**General hints**
Make sure that the oven door is closed properly when the oven operates. Do not open the door too often during cooking. Keep the door gasket clean and make sure it is well fixed in its position.

Use metal dishes to improve energy saving.

When possible, do not preheat the oven before you put the food inside.

When the cooking duration is longer than 30 minutes, reduce the oven temperature to minimum 3 - 10 minutes before the end of the cooking time, depending on the duration of the cooking. The residual heat inside the oven will continue to cook.

Use the residual heat to warm up other dishes.

Keep breaks between baking as short as possible when you prepare few dishes at one time.

**Cooking with fan**
When possible, use the cooking functions with fan to save energy.

**Keep food warm**
Choose the lowest possible temperature setting to use residual heat and keep a meal warm.

**Moist Baking**
Function designed to save energy during cooking.

When you use this function the lamp is off.

# 14. ENVIRONMENTAL CONCERNS

Recycle materials with the symbol ♺. Put the packaging in relevant containers to recycle it. Help protect the environment and human health by recycling waste of electrical and electronic appliances. Do not dispose of appliances marked with the symbol with the household waste. Return the product to your local recycling facility or contact your municipal office.

www.aeg.com/shop



867344483-C-032019

CE

AEG