CombiQuick - Compact Microwave/Multifunction Oven

KME861000M





All the taste, half the time
A succulent roast chicken, a creamy Dauphinoise, a rich beef casserole - all achieved in just half the time a conventional oven would require. The CombiQuick oven is the faster way to exceptional flavours and exciting dishes, combining hot air fan cooking with the speed of a microwave to give you the mouthwatering finish and

A succulent roast chicken, a creamy Dauphinoise, a rich beef casserole - all achieved in just half the time a conventional oven would require. The CombiQuick oven is the faster way to exceptional flavours and exciting dishes, combining hot air fan cooking with the speed of a microwave to give you the mouthwatering finish and

Product Benefits & Features



Cooked evenly everywhere
With this oven, using energy efficiently also means cooking efficiently. It has a new convection system called Hot Air, which ensures hot air circulates evenly throughout the oven cavity. The result is that the oven heats up faster and cooking temperatures can be reduced by up to 20%, saving you both time and energy



Save space without compromising on functionality
This compact microwave oven allows you to successfully cook, grill, re-heat or defrost any dish at the same high-performance level as a larger model. As a result, you can get the most out of your cooking space and prepare a wide variety of dishes all in one compact appliance.



A quicker way to toast and crisp
This highly efficient grill takes less time than traditional ovens, and will toast, crisp or brown your dishes to precision.

Command your cooking
With the responsive Command Wheel you have complete control over the cooking process, whether adjusting the time, temperature or function of your oven. With just a touch, your current cooking settings appear immediately on the clear colour LCD display for at-a-glance monitoring of your meal, making

Low door temperature for safe interaction
Thanks to the Safe to touch Plus door, the outside of the oven door is kept at a low temperature securing safe interaction.

- Electronic touch controls
- 43 litre oven capacity
- Diamond-glazed enamel interior
- Isofront® Plus quadruple glazed door
- Fan controlled defrosting
- Anti-fingerprint stainless steel
- 1000W microwave power
- Microwave
- Conventional cooking
- Top heat browning
- Base heat finishing
- Auto safety switch off and child lock

AEG

CombiQuick - Compact Microwave/Multifunction Oven

KME861000M

Product Specification

Cleaning	Clean enamel
Cavity coating	Grey Enamel
Dimensions (mm) (HxWxD)	455x595x567
Dimensions	450x560x550
Total electricity loading, W	3000
Voltage	230-240
Required Fuse	16
Frequency	50
Cord Length	1.5
Temperature range	30°C - 230°C
Maximum Microwave output (W)	1000
Cavity size	43
Energy class	No
Energy consumption, conventional mode, kWh per cycle	0
Energy consumption per EU standard cycle	0
ProdPartCode	E - Generic Partner All
Colour	Stainless Steel with antifingerprint coating

PSGBOV180DE0000H

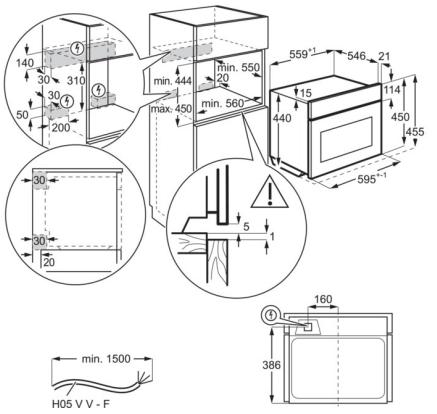

PSGBOV180DE0000J

