AEG

SteamBoost - Steam Oven

BSE882320M





Turn flavours up to full
The SteamBoost oven with FullSteam function makes more of the flavours within your food. It works in exactly the same way as a traditional oven, with the added benefit of steam. And this is where food gets really exciting because heat, of course, browns and crisps. The introduction of steam makes all the difference. Locking in

The SteamBoost oven with FullSteam function makes more of the flavours within your food. It works in exactly the same way as a traditional oven, with the added benefit of steam. And this is where food gets really exciting because heat, of course, browns and crisps. The introduction of steam makes all the difference. Locking in

Product Benefits & Features



Cook to taste, every time
By precisely measuring the core temperature of your food, the Food Sensor lets you know when your rare, medium or well done meat is ready. As well as cooking fish and vegetables just the way you like them.



Cooked evenly everywhere
With this oven, using energy efficiently also means cooking efficiently. It has a new convection system called Hot Air, which ensures hot air circulates evenly throughout the oven cavity. The result is that the oven heats up faster and cooking temperatures can be reduced by up to 20%, saving you

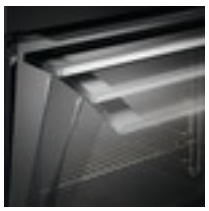

A luxurious look and feel combined with premium performance
The Soft Closing Door technology built into the soft closing door ensures that the door always shuts softly and silently, to deliver both the look and feel of premium performance.

Command your cooking
With the responsive Command Wheel you have complete control over the cooking process, whether adjusting the time, temperature or function of your oven. With just a touch, your current cooking settings appear immediately on the clear colour LCD display for at-a-glance monitoring of your meal, making

Cook more at the same time and still get a perfect result
The additional heating ring in our oven ensures your dishes are evenly cooked – even when loaded with up to three trays – for corner to corner deliciousness. Sure to make each portion as perfect as the last.

- Electronic touch controls
- 70 litre oven capacity
- Inclined FloodLight™ focuses 100% on the food
- Isofront® Plus quadruple glazed door
- Fan controlled defrosting
- LED digital display
- Base heat finishing
- Food probe

AEG

SteamBoost - Steam Oven

BSE882320M

Product Specification

Cleaning	Steam
Cavity coating	Grey Enamel
Dimensions (mm) (HxWxD)	594x595x567
Dimensions	590x560x550
Total electricity loading, W	3500
Voltage	240
Required Fuse	16
Frequency	50
Temperature range	30°C - 230°C
Maximum Microwave output (W)	0
Water Tank Capacity	950 ml
Cavity size	70
Largest Surface area	1424
Noise	53
Energy class	A+
Energy consumption, conventional mode, kWh per cycle	1.09
Energy consumption per EU standard cycle	0
ProdPartCode	E - Generic Partner All
Colour	Stainless Steel with antifingerprint coating

PSGBOV180DE0000F

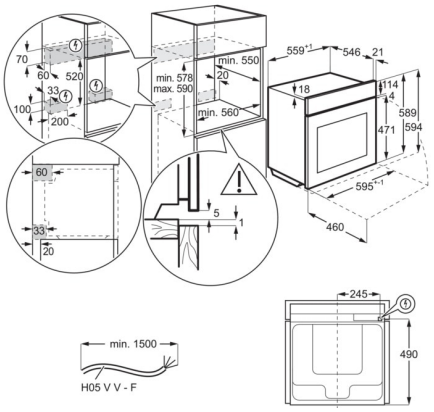

PSGBOV180DE0000G

