BPE642020M
BPK642020M

EN **User Manual**
Oven

USER MANUAL

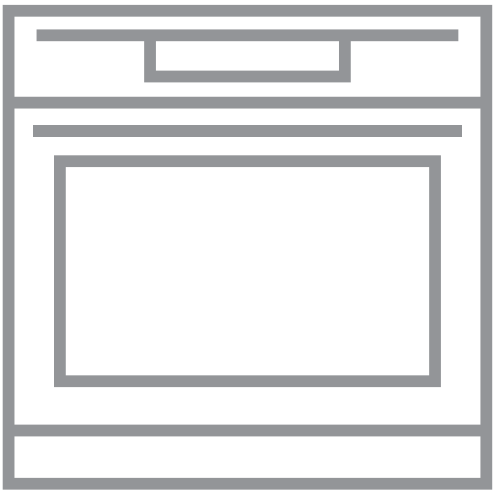

AEG

CONTENTS

1. SAFETY INFORMATION....2
2. SAFETY INSTRUCTIONS....4
3. PRODUCT DESCRIPTION....7
4. CONTROL PANEL....8
5. BEFORE FIRST USE....10
6. DAILY USE....10
7. CLOCK FUNCTIONS....12
8. AUTOMATIC PROGRAMMES....14
9. USING THE ACCESSORIES....16
10. ADDITIONAL FUNCTIONS....19
11. HINTS AND TIPS....21
12. CARE AND CLEANING....36
13. TROUBLESHOOTING....39
14. ENERGY EFFICIENCY....41

FOR PERFECT RESULTS

Thank you for choosing this AEG product. We have created it to give you impeccable performance for many years, with innovative technologies that help make life simpler features you might not find on ordinary appliances. Please spend a few minutes reading to get the very best from it.
Visit our website for:



Get usage advice, brochures, trouble shooter, service information:
www.aeg.com/webselfservice



Register your product for better service:
www.registeraeg.com



Buy Accessories, Consumables and Original spare parts for your appliance:
www.aeg.com/shop

CUSTOMER CARE AND SERVICE

Always use original spare parts.
When contacting our Authorised Service Centre, ensure that you have the following data available: Model, PNC, Serial Number.
The information can be found on the rating plate.

⚠ Warning / Caution-Safety information

ⓘ General information and tips

Environmental information

Subject to change without notice.

1. ⚠ SAFETY INFORMATION

Before the installation and use of the appliance, carefully read the supplied instructions. The

manufacturer is not responsible for any injuries or damages that are the result of incorrect installation or usage. Always keep the instructions in a safe and accessible location for future reference.

1.1 Children and vulnerable people safety

- This appliance can be used by children aged from 8 years and above and persons with reduced physical, sensory or mental capabilities or lack of experience and knowledge if they have been given supervision or instruction concerning the use of the appliance in a safe way and understand the hazards involved.
- Children between 3 and 8 years of age and persons with very extensive and complex disabilities shall be kept away unless continuously supervised.
- Children of less than 3 years of age should be kept away unless continuously supervised.
- Do not let children play with the appliance.
- Keep all packaging away from children and dispose of it appropriately.
- Keep children and pets away from the appliance when it operates or when it cools down. Accessible parts are hot.
- If the appliance has a child safety device, it should be activated.
- Children shall not carry out cleaning and user maintenance of the appliance without supervision.

1.2 General Safety

- Only a qualified person must install this appliance and replace the cable.
- WARNING: The appliance and its accessible parts become hot during use. Care should be taken to avoid touching heating elements.
- Always use oven gloves to remove or put in accessories or ovenware.
- Before carrying out any maintenance, disconnect the appliance from the power supply.

- Ensure that the appliance is switched off before replacing the lamp to avoid the possibility of electric shock.
- Do not use a steam cleaner to clean the appliance.
- Do not use harsh abrasive cleaners or sharp metal scrapers to clean the glass door since they can scratch the surface, which may result in shattering of the glass.
- If the mains power supply cable is damaged, it must be replaced by the manufacturer, its Authorised Service Centre or similarly qualified persons to avoid an electrical hazard.
- Excessive spillage must be removed before the pyrolytic cleaning. Remove all parts from the oven.
- To remove the shelf supports first pull the front of the shelf support and then the rear end away from the side walls. Install the shelf supports in the opposite sequence.
- The means for disconnection must be incorporated in the fixed wiring in accordance with the wiring rules.
- Use only the food sensor (core temperature sensor) recommended for this appliance.

2. SAFETY INSTRUCTIONS

2.1 Installation

WARNING!
Only a qualified person must install this appliance.

- Remove all the packaging.
- Do not install or use a damaged appliance.
- Follow the installation instructions supplied with the appliance.
- Always take care when moving the appliance as it is heavy. Always use safety gloves and enclosed footwear.
- Do not pull the appliance by the handle.
- Keep the minimum distance from other appliances and units.
- Make sure that the appliance is installed below and adjacent safe structures.
- The sides of the appliance must stay adjacent to appliances or units with the same height.
- The appliance is equipped with an electric cooling system. It must be operated with the electric power supply.

2.2 Electrical connection

WARNING!
Risk of fire and electric shock.

- All electrical connections should be made by a qualified electrician.
- The appliance must be earthed.
- Make sure that the parameters on the rating plate are compatible with the electrical ratings of the mains power supply.

- Always use a correctly installed shockproof socket.
- Do not use multi-plug adapters and extension cables.
- Make sure not to cause damage to the mains plug and to the mains cable. Should the mains cable need to be replaced, this must be carried out by our Authorised Service Centre.
- Do not let mains cables touch or come near the appliance door, especially when the door is hot.
- The shock protection of live and insulated parts must be fastened in such a way that it cannot be removed without tools.
- Connect the mains plug to the mains socket only at the end of the installation. Make sure that there is access to the mains plug after the installation.
- If the mains socket is loose, do not connect the mains plug.
- Do not pull the mains cable to disconnect the appliance. Always pull the mains plug.
- Use only correct isolation devices: line protecting cut-outs, fuses (screw type fuses removed from the holder), earth leakage trips and contactors.
- The electrical installation must have an isolation device which lets you disconnect the appliance from the mains at all poles. The isolation device must have a contact opening width of minimum 3 mm.
- This appliance complies with the E.E.C. Directives.

2.3 Use

WARNING!
Risk of injury, burns and electric shock or explosion.

- This appliance is for household use only.
- Do not change the specification of this appliance.
- Make sure that the ventilation openings are not blocked.
- Do not let the appliance stay unattended during operation.
- Deactivate the appliance after each use.
- Be careful when you open the appliance door while the appliance is in operation. Hot air can release.
- Do not operate the appliance with wet hands or when it has contact with water.
- Do not apply pressure on the open door.
- Do not use the appliance as a work surface or as a storage surface.
- Open the appliance door carefully. The use of ingredients with alcohol can cause a mixture of alcohol and air.
- Do not let sparks or open flames to come in contact with the appliance when you open the door.
- Do not put flammable products or items that are wet with flammable products in, near or on the appliance.

WARNING!
Risk of damage to the appliance.

- To prevent damage or discoloration to the enamel:
  - do not put ovenware or other objects in the appliance directly on the bottom.
  - do not put aluminium foil directly on the bottom of cavity of the appliance.
  - do not put water directly into the hot appliance.
  - do not keep moist dishes and food in the appliance after you finish the cooking.
  - be careful when you remove or install the accessories.
- Discoloration of the enamel or stainless steel has no effect on the performance of the appliance.
- Use a deep pan for moist cakes. Fruit juices cause stains that can be permanent.
- This appliance is for cooking purposes only. It must not be used for other purposes, for example room heating.
- Always cook with the oven door closed.
- If the appliance is installed behind a furniture panel (e.g. a door) make sure the door is never closed when the appliance is in operation. Heat and moisture can build up behind a closed furniture panel and cause

subsequent damage to the appliance, the housing unit or the floor. Do not close the furniture panel until the appliance has cooled down completely after use.

2.4 Care and cleaning

WARNING!
Risk of injury, fire, or damage to the appliance.

- Before maintenance, deactivate the appliance and disconnect the mains plug from the mains socket.
- Make sure the appliance is cold. There is the risk that the glass panels can break.
- Replace immediately the door glass panels when they are damaged. Contact the Authorised Service Centre.
- Be careful when you remove the door from the appliance. The door is heavy!
- Clean regularly the appliance to prevent the deterioration of the surface material.
- Clean the appliance with a moist soft cloth. Only use neutral detergents. Do not use any abrasive products, abrasive cleaning pads, solvents or metal objects.
- If you use an oven spray, follow the safety instruction on it's packaging.
- Do not clean the catalytic enamel (if applicable) with any kind of detergent.

2.5 Pyrolytic cleaning

WARNING!
Risk of Injury / Fires / Chemical Emissions (Fumes) in Pyrolytic Mode.

- Before carrying out a Pyrolitic self-cleaning function or the First Use please remove from the oven cavity:
  - any excess food residues, oil or grease spills / deposits.
  - any removable objects (including shelves, side rails etc., provided with the product) particularly any non-stick pots, pans, trays, utensils etc.
- Read carefully all the instructions for Pyrolytic cleaning.
- Keep children away from the appliance while the Pyrolytic cleaning is in operation.
  The appliance becomes very hot and hot air is released from the front cooling vents.
- Pyrolytic cleaning is a high temperature operation that can release fumes from cooking residues and construction materials, as such consumers are strongly advised to:
  - provide good ventilation during and after each Pyrolytic cleaning.
  - provide good ventilation during and after the first use at maximum temperature operation.
- Unlike all humans, some birds and reptiles can be extremely sensitive to potential fumes emitted during the cleaning process of all Pyrolytic Ovens.
  - Remove any pets (especially birds) from the vicinity of the appliance location during and after the Pyrolytic cleaning and first use maximum temperature operation to a well ventilated area.
- Small pets can also be highly sensitive to the localized temperature changes in the vicinity of all Pyrolytic Ovens when the Pyrolytic self cleaning program is in operation.
- Non-stick surfaces on pots, pans, trays, utensils etc., can be damaged by the high temperature Pyrolytic cleaning operation of all Pyrolytic Ovens and can be also a source for low level harmful fumes.
- Fumes released from all Pyrolytic Ovens / Cooking Residues as described are not harmful to humans, including infants or persons with medical conditions.

2.6 Internal lighting

WARNING!
Risk of electric shock.

- The type of light bulb or halogen lamp used for this appliance is for household appliances only. Do not use it for house lighting.

- Before replacing the lamp, disconnect the appliance from the power supply.
- Only use lamps with the same specifications.

2.7 Service

- To repair the appliance contact an Authorised Service Centre.
- Use original spare parts only.

2.8 Disposal

WARNING!
Risk of injury or suffocation.

- Disconnect the appliance from the mains supply.
- Cut off the mains electrical cable close to the appliance and dispose of it.
- Remove the door catch to prevent children or pets from becoming trapped in the appliance.

3. PRODUCT DESCRIPTION

3.1 General overview

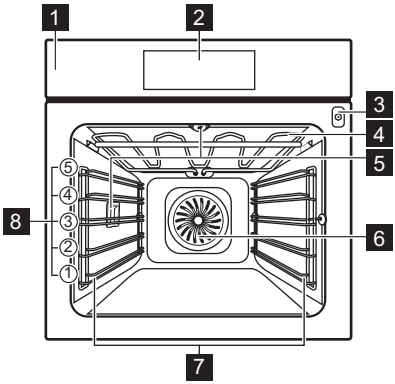

1 Control panel
2 Display
3 Socket for the core temperature sensor
4 Heating element
5 Lamp
6 Fan
7 Shelf support, removable
8 Shelf positions

3.2 Accessories

Wire shelf

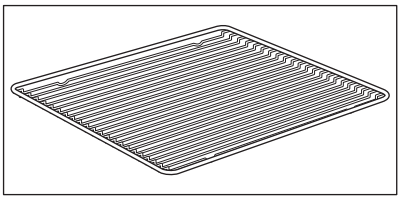

For cookware, cake tins, roasts.

Grill- / Roasting pan

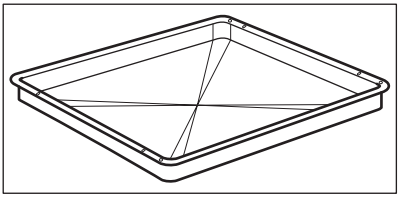

To bake and roast or as a pan to collect fat.

Trivet

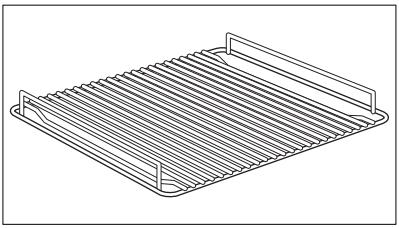

For roasting and grilling.

Use the trivet only with the Grill- / Roasting pan.

Food Sensor

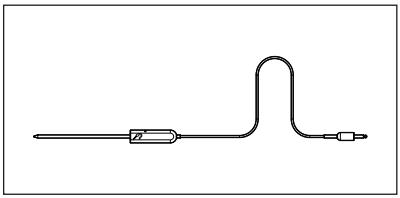

To measure the temperature inside the food.

4. CONTROL PANEL

4.1 Electronic programmer

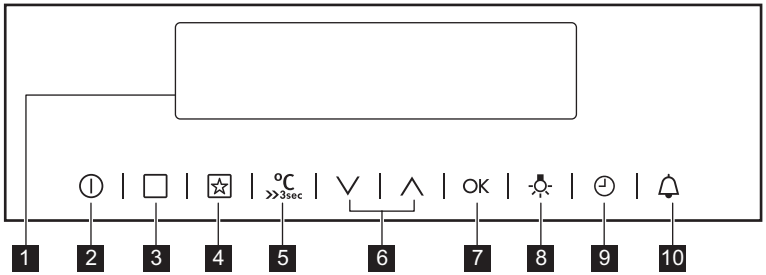

Use the sensor fields to operate the oven.

	Sensor Field	Function	Description
1	-	DISPLAY	Shows the current settings of the oven.
2	⏻	ON / OFF	To turn the oven on and off.
3	□	OPTIONS	To set a heating function or an automatic programme.
4	☆	MY FAVOURITE PROGRAMME	To store your favourite programme. Use it to have access to your favourite programme directly or when the oven is off.

	Sensor Field	Function	Description
5	°C >>3sec	TEMPERATURE / FAST HEAT UP	To set and see the cavity temperature or the core temperature sensor temperature (if present). If you press and hold it for three seconds, it turns the Fast heat up function ON or OFF. Straight access to the temperature setting of the first oven function when the oven is off.
6		UP, DOWN	To move up or down in the menu.
7	OK	OK	To confirm a selection or setting.
8		OVEN LIGHT	To turn the oven lamp on and off.
9		CLOCK	To set the clock functions.
10		MINUTE MINDER	To set the Minute Minder.

4.2 Display

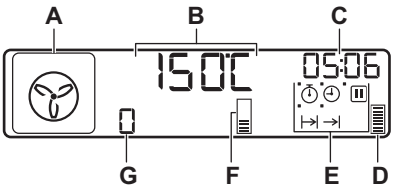

A. Oven function symbol
B. Temperature / time of day display
C. Clock / Residual heat display / Minute Minder
D. Residual heat indicator
E. Indicators for the clock functions
F. Heat-up indicator / Fast Heat Up indicator
G. Number of an oven function / programme

Other indicators of the display:

Symbol	Name	Description
☐	**Functions**	You can choose an oven function.
⊢→	**Automatic programme**	You can choose an automatic programme.
☆	**My favourite programme**	The favourite programme operates.

Symbol	Name	Description
kgr / gr	kg / g	An automatic programme with a weight input operates.
h / min	h / min	A clock function operates.
°C	Temperature / Fast heat up	The function operates.
°C	Temperature	The current temperature is indicated.
°C	Temperature	You can change the temperature.
	Core temperature sensor	The core temperature sensor is in the core temperature sensor socket.
	Door lock	The door lock function operates.
	Light	You deactivated the light.
	Minute minder	The minute minder function operates.

4.3 Heat up indicator

If you turn on the heating function, appears. The bars show that the temperature in the oven increases or decreases.

When the oven is at the set temperature, the bars go off the display.

5. BEFORE FIRST USE

WARNING!
Refer to Safety chapters.

To set the Time of day refer to "Clock functions" chapter.

5.1 Initial Cleaning

Remove all accessories and removable shelf supports from the oven.

Refer to "Care and cleaning" chapter.

Clean the oven and the accessories before first use.
Put the accessories and the removable shelf supports back to their initial position.

6. DAILY USE

WARNING!
Refer to Safety chapters.

6.1 Heating functions

Oven function	Application
 True Fan Cooking	To bake on up to three shelf positions at the same time and to dry food. Set the temperature 20 - 40 °C lower than for Conventional Cooking.
 Pizza Setting	To bake food on one shelf position for a more intensive browning and a crispy bottom. Set the temperature 20 - 40 °C lower than for Conventional Cooking.
 Slow Cooking	To prepare tender, succulent roasts.
 Conventional Cooking (Top / Bottom Heat)	To bake and roast food on one shelf position.
 Frozen Foods	To make convenience food like e.g. french fries, potato wedges or spring rolls crispy.
 Grilling	To grill flat food and to toast bread.
 Turbo Grilling	To roast larger meat joints or poultry with bones on one shelf position. Also to make gratins and to brown.
 Bottom Heat	To bake cakes with crispy bottom and to preserve food.

Oven function	Application
 Defrost	This function can be used for defrosting frozen foods, such as vegetables and fruits. The defrosting time depends on the amount and size of the frozen food.
 Moist Fan Baking	This function is designed to save energy during cooking. For more information refer to "Hints and tips" chapter, Moist Fan Baking. The oven door should be closed during cooking so that the function is not interrupted and to ensure that the oven operates with the highest energy efficiency possible. When you use this function, the temperature in the cavity may differ from the set temperature. Due to the use of the residual heat - the heating power may be reduced. For general energy saving recommendations refer to: "Energy Efficiency" chapter, Energy Saving.This function was used to comply with the energy efficiency class according to EN 60350-1.
 Bread Baking	Use this function to prepare bread and bread rolls with a very good professional-like result in terms of crispiness, colour and crust gloss.
 Keep Warm	To keep food warm.

Oven function	Application
 Pyrolysis	To activate the automatic pyrolytic cleaning of the oven. This function burns off residual dirt in the oven.

The lamp may turn off automatically at a temperature below 60 °C during some oven functions.

6.2 Setting the heating function

1. Turn on the oven with ⏻.

The display shows the set temperature, the symbol and the number of the heating function.

2. Press ∧ or ∨ to set a heating function.
3. Press OK or the oven starts automatically after 5 seconds.

If you turn on the oven and do not set any heating function or programme, the oven turns off automatically after 20 seconds.

6.3 Changing the temperature

Press ∧ or ∨ to change the temperature in steps: 5 °C.
When the oven is at the set temperature a signal sounds and the Heat up indicator disappears.

6.4 Checking the temperature

You can check the current temperature in the oven when the function or programme works.

1. Press °C.

The display shows the temperature in the oven.

2. Press OK or the display shows again the set temperature automatically after 5 seconds.

6.5 Fast heat up

Do not put food in the oven when the Fast heat up operates.

The Fast heat up is available only for some oven functions. If Faulty tone is turned on in the settings menu, the signal sounds if the Fast heat up is not available for the set function. Refer to "Additional functions" chapter, Using the settings menu.

The Fast heat up decreases the heat up time.

To turn on the Fast heat up press and hold °C for more than 3 seconds.
If the Fast heat up is turned on the display shows: flashing horizontal bars and °C⏩.

7. CLOCK FUNCTIONS

7.1 Clock functions table

Clock function		Application
🕓	TIME OF DAY	To show or change the time of day. You can change the time of day only when the oven is on.
↦|	DURATION	To set how long the oven works.
→|	END	To set when the oven turns off.
↦|→|	TIME DELAY	To combine DURATION and END function.

Clock function		Application
	SET+GO	To turn on the oven with necessary settings with only one press of the sensor field any time later.
	MINUTE MINDER	To set a countdown time. This function has no effect on the operation of the oven. You can set the MINUTE MINDER at any time and also when the oven is off.
00:00	COUNT UP TIMER	To set the count up, which shows how long the oven works. This function has no effect on the operation of the oven. It is on immediately when the oven starts to heat. The COUNT UP TIMER is not turned on if DURATION and END are set.

7.2 Setting and changing the time

After the first connection to the mains, wait until the display shows **h** and **12:00**. "**12**" flashes.

1. Touch ∧ or ∨ to set the hours.
2. Touch OK or ⏲.
3. Touch ∧ or ∨ to set the minutes.
4. Touch OK or ⏲.

The display shows the new time.

To change the time of day touch ⏲ again and again until ⏲ starts to flash.

7.3 Setting the DURATION

1. Set a heating function and temperature.
2. Press ⏲ again and again until ↦| starts to flash.
3. Use ∧ or ∨ to set the minutes for DURATION time.
4. Press OK or the DURATION time starts automatically after 5 seconds.
5. Use ∧ or ∨ to set the hours for DURATION time.
6. Press OK. The DURATION time starts automatically after 5 seconds.

When the set time ends, the signal sounds for 2 minutes. ↦| and time setting flash in the display. The oven turns off.

7. Press a sensor field or open the oven door to stop the signal.
8. Turn off the oven.

7.4 Setting the END

1. Set an oven function and temperature.
2. Touch ⏲ again and again until →| starts to flash.
3. Use ∧ or ∨ to set the END and OK or ⏲ to confirm. First you set the minutes and then the hours.

When the set time ends, an acoustic signal sounds for 2 minutes. →| and the time setting flash in the display. The appliance deactivates automatically.

4. Touch a sensor field or open the oven door to stop the acoustic signal.
5. Turn off the appliance.

7.5 Setting the TIME DELAY function

1. Set an oven function and temperature.
2. Touch ⏲ again and again until ↦| starts to flash.
3. Use ∧ or ∨ to set the minutes for DURATION.
4. Touch OK.
5. Use ∧ or ∨ to set the hours for DURATION.
6. Touch OK, the appliance switches to the setting of the END function.

The display shows flashing →|.

7. Use ∧ or ∨ to set the END and OK or ⏲ to confirm. First you set the minutes and then the hours.

Appliance turns on automatically later on, works for the set DURATION time and stops at the set END time. At the set time an acoustic signal sounds for 2 minutes. →| and the time setting flash in the display. The appliance deactivates automatically.

8. Touch a sensor field or open the oven door to stop the acoustic signal.
9. Turn off the appliance.

When the Time delay function is activated, the display shows a static symbol of the oven function, |→| with a dot and →|. The dot shows which clock function is on in the Clock / residual heat display.

7.6 Setting the SET+GO

You can use the SET+GO function only when the DURATION is set.

1. Set an oven function (or a programme) and temperature.
2. Set the DURATION.
3. Touch ⏲ again and again until ⏸ flashes in the display.
4. Touch OK to set the SET+GO function.

The display shows |→| and ⏸ with an indicator. This indicator shows which clock function is activated.

5. Touch a sensor field (apart from ON / OFF) to start the SET+GO function.

7.7 Setting the MINUTE MINDER

1. Touch 🔔.

🔔 and "00" flash in the display.

2. Use 🔔 to switch between options. First you set the seconds, then the minutes and the hours.
3. Use ∧ or ∨ to set the MINUTE MINDER and 🔔 to confirm.
4. Touch OK or the MINUTE MINDER starts automatically after 5 seconds.

When the set time ends, an acoustic signal sounds for 2 minutes and 00:00 and 🔔 flash in the display.

5. Touch a sensor field or open the oven door to stop the acoustic signal.

7.8 COUNT UP TIMER

1. To reset the Count Up Timer press: ⏲again and again until display shows flashing⏱ .
2. Press and hold: ∨ . When the display shows "00:00" the Count Up Timer starts to count up again.

8. AUTOMATIC PROGRAMMES

WARNING!
Refer to Safety chapters.

There are 20 automatic programmes. Use an automatic programme or recipe when you do not have the knowledge or experience on how to prepare a dish. The display shows the default cooking times for all automatic programmes.

8.1 Automatic programmes

	Programme name
1	ROAST BEEF
2	ROAST PORK
3	ROAST VEAL
4	ROAST LAMB
5	ROAST GAME
6	CHICKEN, WHOLE

	Programme name
7	WHOLE FISH
8	PIZZA
9	QUICHE LORRAINE
10	LEMON SPONGE CAKE
11	CHEESE CAKE
12	ROLLS
13	FARMER BREAD
14	DOUGH PROVING
15	POTATO GRATIN
16	LASAGNE
17	CANNELLONI
18	CONVENIENCE CAKE
19	CONVENIENCE PIZZA
20	CONVENIENCE POTATO TYPES

8.2 Recipes online

You can find the recipes for the automatic programmes specified for this appliance on our website. To find the proper Recipe Book check the PNC number on the rating plate on the front frame of the appliance cavity.

8.3 Automatic programmes

1. Activate the appliance.
2. Touch ☐.

The display shows ↦|, a symbol and the number of the automatic programme.

3. Touch ∧ or ∨ to choose the automatic programme.
4. Touch OK or wait five seconds until the appliance automatically starts to work.
5. When the set time ends, an acoustic signal sounds for two minutes. The symbol ↦| flashes.
6. Touch a sensor field or open the oven door to stop the acoustic signal.
7. Deactivate the appliance.

8.4 Automatic programmes with weight input

If you set the weight of the meat, the appliance calculates the roasting time.

1. Activate the appliance.
2. Touch ☐.
3. Touch ∧ or ∨ to set the weight programme.

The display shows: the cooking time, the duration symbol ↦|, a default weight, a unit of measurement (kg, g).

4. Touch OK or the settings save automatically after five seconds.

The appliance activates.

5. You can change the default weight value with ∧ or ∨. Touch OK.
6. When the set time ends, an acoustic signal sounds for two minutes. ↦| flashes.
7. Touch a sensor field or open the oven door to stop the acoustic signal.
8. Deactivate the appliance.

8.5 Automatic programmes with the core temperature sensor (selected models)

The core temperature of the food is default and fixed in programmes with the core temperature sensor. The programme ends when the appliance is at the set core temperature.

1. Activate the appliance.
2. Touch ☐ again and again until the display shows ↦|.
3. Install the core temperature sensor. Refer to "Core temperature sensor".
4. Touch ∧ or ∨ to set the programme for the core temperature sensor.

The display shows the cooking time, ↦| and .

5. Touch OK or the settings save automatically after five seconds.

When the set time ends, an acoustic signal sounds for two minutes. ↦| flashes.

6. Touch a sensor field or open the door to stop the acoustic signal.
7. Deactivate the appliance.

9. USING THE ACCESSORIES

WARNING!
Refer to Safety chapters.

9.1 Core temperature sensor

The core temperature sensor measures temperature inside the food. When the food is at the set temperature, the oven turns off.

There are two temperatures to be set:

- the oven temperature (minimum 120 °C),
- the food core temperature.

CAUTION!
Use only the core temperature sensor supplied and the original replacement parts.

Directions for the best results:

- Ingredients should be at room temperature.
- Core temperature sensor cannot be used for liquid dishes.
- During cooking the core temperature sensor must remain in the dish and the plug in the socket.
- Use recommended food core temperature settings. Refer to "Hints and tips" chapter.

The aoven calculates the approximate cooking time, it may change.

When you put the core temperature sensor into the socket, you cancel the settings for the clock functions.

Food categories: meat, poultry and fish

1. Activate the appliance.
2. Insert the tip of the core temperature sensor (with ⁄ on the handle) into the centre of the meat or fish, in the thickest part as possible. Make sure that at least 3/4 of the core temperature sensor is inside of the dish.
3. Put the plug of the core temperature sensor into the socket located in the front frame of the appliance.

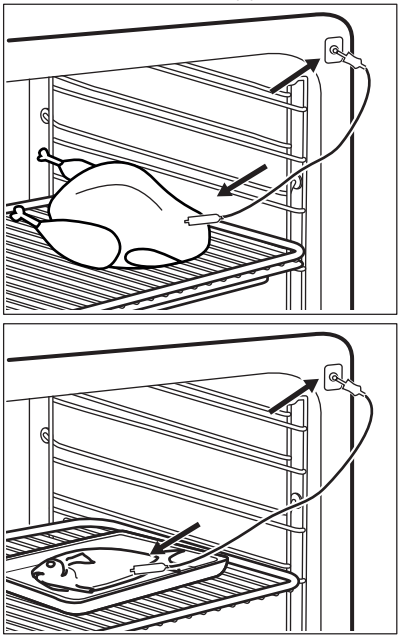

The display shows ⁄ flashing and the default set core temperature. The temperature is 60 °C for the first operation, and the last set value for each subsequent operation.

4. Touch ∧ or ∨ to set the core temperature.
5. Touch OK or the settings save automatically after 5 seconds.

You can set the core temperature only when flashes. If is in the display but does not flash before you set the core temperature, touch °C and or to set a new value.

6. Set the oven function and the oven temperature.

The display shows the current core temperature and the heat up symbol .

When you cook with the core temperature sensor, you can change the temperature shown in the display. After you put the core temperature sensor in the socket and set an oven function and temperature, the display shows the current core temperature. Touch °C again and again to see three other temperatures:

- the set core temperature
- the current oven temperature
- the current core temperature.

When the dish is at the set core temperature, an acoustic signal sounds for 2 minutes and the value of the core temperature and flash. The appliance deactivates.

7. Touch a sensor field to deactivate the acoustic signal.
8. Remove the core temperature sensor from the socket and remove the dish from the appliance.

WARNING!
There is a risk of burns as the core temperature sensor becomes hot. Be careful when you unplug it and remove it from the dish.

Food category: casserole

1. Activate the appliance.
2. Place half of the ingredients in a baking dish.
3. Insert the tip of the core temperature sensor exactly in the centre of the casserole. The core temperature sensor should be stabilized in one place during baking. Use a solid ingredient to achieve that. Use the rim of the baking dish to support the silicone handle of the core temperature sensor. The tip of the core temperature sensor should not touch the bottom of a baking dish.

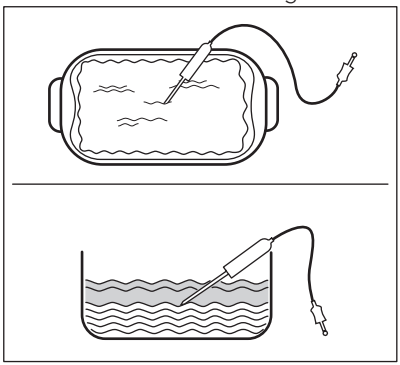

4. Cover the core temperature sensor with the remaining ingredients.
5. Put the plug of the core temperature sensor into the socket located in the front frame of the appliance.

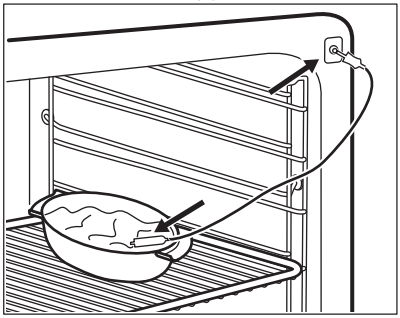

The display shows flashing and the default set core temperature. The temperature is 60 °C for the first operation, and the last set value for each subsequent operation.

6. Touch or to set the core temperature.

7. Touch OK or the settings save automatically after 5 seconds.

You can set the core temperature only when flashes. If is in the display but does not flash before you set the core temperature, touch and or to set a new value.

8. Set the oven function and the oven temperature.

The display shows the current core temperature and the heat up symbol . When the dish is at the set core temperature, an acoustic signal sounds for 2 minutes and the value of the core temperature and flash. The appliance deactivates.

9. Touch a sensor field to deactivate the acoustic signal.
10. Remove the core temperature sensor from the socket and remove the dish from the appliance.

WARNING!
There is a risk of burns as the core temperature sensor becomes hot. Be careful when you unplug it and remove it from the dish.

9.2 Inserting the accessories

Wire shelf:

Push the shelf between the guide bars of the shelf support and make sure that the feet point down.

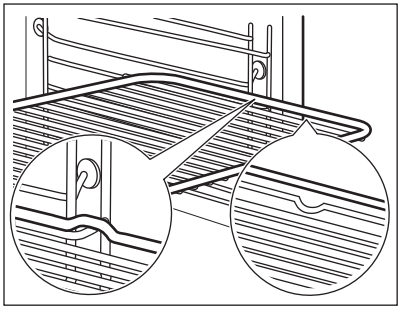

Deep pan:

Push the deep pan between the guide bars of the shelf support.

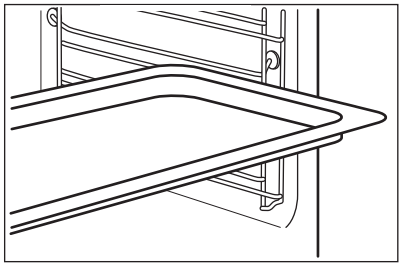

Wire shelf anddeep pan together:

Push the deep pan between the guide bars of the shelf support and the wire shelf on the guide bars above.

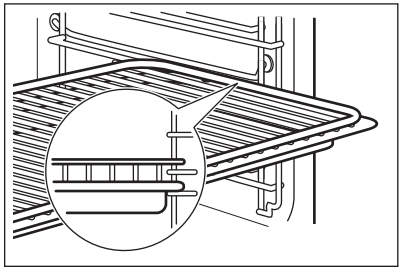

Small indentation at the top increase safety. The indentations are also anti-tip devices. The high rim around the shelf prevents cookware from slipping of the shelf.

9.3 Trivet and Grill- / Roasting pan

WARNING!
Be careful when you remove the accessories from a hot oven. There is a risk of burns.

You can use the trivet to roast larger pieces of meat or poultry on one shelf position.

1. Put the trivet into the deep pan so that the supports of the wire shelf point up.

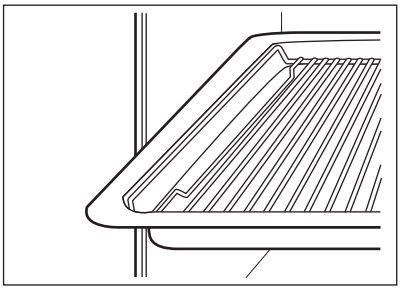

2. Put the deep pan into the oven on the necessary shelf position.

You can use the trivet to grill flat dishes in large quantities and to toast.

1. Put the trivet into the deep pan so that the supports of the wire shelf point down.

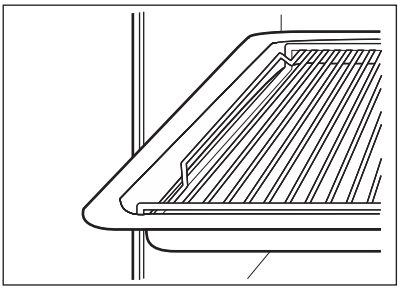

2. Put the deep pan into the oven on the necessary shelf position.

10. ADDITIONAL FUNCTIONS

10.1 Using My Favourite Programme function

Use this function to save your favourite temperature and time settings for an oven function or programme.

1. Set the temperature and time for an oven function or programme.
2. Touch and hold ☆ for more than three seconds. An acoustic signal sounds.
3. Deactivate the appliance.

- **To activate the function** touch ☆. The appliance activates your favourite programme.

When the function operates, you can change the time and temperature.

- **To deactivate the function** touch ⏻. The appliance deactivates your favourite programme.

10.2 Using the Child Lock

The Child Lock prevents an accidental operation of the oven.

If the Pyrolysis function operates, the door is locked. A message comes on in the display when you press a sensor field.

1. You can turn on this function when the oven is off. Do not set a heating function.
2. Press and hold ⏻ for 3 seconds.
3. Press and hold 🕘 and ∨ at the same time for 2 seconds.

An acoustic signal sounds.
The display shows SAFE. The door is locked.
To turn off the Child Lock function repeat step 3.

10.3 Using the Function Lock

You can turn on the function only when the oven works.

The Function Lock prevents an accidental change of the oven function.

1. To turn on the function turn on the oven.
2. Turn on an oven function or setting.
3. Touch and hold 🕘 and ∨ at the same time for 2 seconds.

A signal sounds.
Lock comes on in the display.

To turn off the Function Lock repeat step 3.

If the Pyrolysis function works, the door is locked. A message comes on in the display when you touch a sensor field.

You can turn off the oven when the Function Lock is on. When you turn off the oven, the Function Lock turns off.

10.4 Using the settings menu

The settings menu lets you turn on or turn off functions in the main menu. The display shows SET and the number of the setting.

	Description	Value to set
1	SET+GO	ON / OFF
2	RESIDUAL HEAT INDICATOR	ON / OFF
3	CLEANING REMINDER	ON / OFF
4	KEY TONE[1)]	CLICK / BEEP / OFF
5	FAULTY TONE	ON / OFF
6	DEMO MODE	Activation code: 2468
7	SERVICE MENU	-
8	RESTORE SETTINGS	YES / NO

1) It is not possible to deactivate the tone of the ON / OFF sensor field.

1. Press and hold ☐ for 3 seconds. The display shows SET1 and "1" flashes.
2. Press ∧ or ∨ to set the setting.
3. Press OK.
4. Press ∧ or ∨ to change the value of the setting.
5. Press OK.

To exit the Settings menu, press ⏻ or press and hold ☐.

10.5 Automatic Switch-off

For safety reasons the appliance deactivates automatically after some time if an oven function operates and you do not change any settings.

Temperature (°C)	Switch-off time (h)
30 - 115	12.5
120 - 195	8.5
200 - 245	5.5
250 - maximum	1.5

After the Automatic switch-off, touch a sensor field to operate the appliance again.

The Automatic switch-off does not work with the functions: core temperature sensor, Light, Slow Cooking, Duration, End, Time delay.

10.6 Brightness of the display

There are two modes of display brightness:

- Night brightness - when the appliance is deactivated, the brightness of the display is lower between 10 PM and 6 AM.
- Day brightness:
  – when the appliance is activated.
  – if you touch a sensor field during the night brightness (apart from ON / OFF), the display goes back to the day brightness mode for the next 10 seconds.
  – if the appliance is deactivated and you set the Minute Minder. When the Minute Minder function ends, the display goes back to the night brightness.

10.7 Cooling fan

When the oven operates, the cooling fan turns on automatically to keep the surfaces of the oven cool. If you turn off the oven, the cooling fan can continue to operate until the oven cools down.

11. HINTS AND TIPS

WARNING!
Refer to Safety chapters.

The temperature and baking times in the tables are guidelines only. They depend on the recipes and the quality and quantity of the ingredients used.

11.1 Cooking recommendations

Your oven may bake or roast differently to the oven you had before. The below tables provide you with the standard settings for temperature, cooking time and shelf position.

If you cannot find the settings for a special recipe, look for the similar one.

11.2 Inner side of the door

On the inner side of the door you can find:

- the numbers of the shelf positions.
- information about the oven functions, recommended shelf positions and temperatures for dishes.

11.3 Baking

- Use the lower temperature the first time.
- You can extend baking times by 10 – 15 minutes if you bake cakes on more than one shelf position.
- Cakes and pastries at different heights do not always brown equally. There is no need to change the temperature setting if an unequal browning occurs. The differences equalize during baking.
- Trays in the oven can twist during baking. When the trays become cold again, the distortions disappear.

11.4 Tips on baking

Baking results	Possible cause	Remedy
The bottom of the cake is not browned sufficiently.	The shelf position is incorrect.	Put the cake on a lower shelf.

Baking results	Possible cause	Remedy
The cake sinks and becomes soggy, lumpy or streaky.	The oven temperature is too high.	The next time you bake, set a slightly lower oven temperature.
	The baking time is too short.	Set a longer baking time. You cannot decrease baking times by setting higher temperatures.
	There is too much liquid in the mixture.	Use less liquid. Be careful with mixing times, especially if you use a mixing machine.
The cake is too dry.	The oven temperature is too low.	The next time you bake, set a higher oven temperature.
	The baking time is too long.	The next time you bake, set a shorter baking time.
The cake browns unevenly.	The oven temperature is too high and the baking time is too short.	Set a lower oven temperature and a longer baking time.
	The mixture is unevenly distributed.	Spread the mixture evenly on the baking tray.
The cake is not ready in the baking time given.	The oven temperature is too low.	The next time you bake, set a slightly higher oven temperature.

11.5 Baking on one level:

Baking in tins

Food	Function	Temperature (°C)	Time (min)	Shelf position
Ring cake / Brioche	True Fan Cooking	150 - 160	50 - 70	1
Madeira cake / Fruit cakes	True Fan Cooking	140 - 160	70 - 90	1
Flan base - short pastry	True Fan Cooking	170 - 180[1)]	10 - 25	2
Flan base - sponge mixture	True Fan Cooking	150 - 170	20 - 25	2
Cheesecake	Top / Bottom Heat	170 - 190	60 - 90	1

1) Preheat the oven.

Cakes / pastries / breads on baking trays

Food	Function	Temperature (°C)	Time (min)	Shelf position
Plaited bread / Bread crown	Top / Bottom Heat	170 - 190	30 - 40	3
Christmas stollen	Top / Bottom Heat	160 - 180[1)]	50 - 70	2
Bread (rye bread): 1. First part of baking procedure. 2. Second part of baking procedure.	Top / Bottom Heat	1. 230[1)] 2. 160 - 180	1. 20 2. 30 - 60	1
Cream puffs / Eclairs	Top / Bottom Heat	190 - 210[1)]	20 - 35	3
Swiss roll	Top / Bottom Heat	180 - 200[1)]	10 - 20	3
Cake with crumble topping (dry)	True Fan Cooking	150 - 160	20 - 40	3
Buttered almond cake / Sugar cakes	Top / Bottom Heat	190 - 210[1)]	20 - 30	3
Fruit flans (made with yeast dough / sponge mixture)[2)]	True Fan Cooking	150	35 - 55	3
Fruit flans (made with yeast dough / sponge mixture)[2)]	Top / Bottom Heat	170	35 - 55	3
Fruit flans made with short pastry	True Fan Cooking	160 - 170	40 - 80	3
Yeast cakes with delicate toppings (e.g. quark, cream, custard)	Top / Bottom Heat	160 - 180[1)]	40 - 80	3

[1)] Preheat the oven.

[2)] Use a deep pan.

Biscuits

Food	Function	Temperature (°C)	Time (min)	Shelf position
Short pastry biscuits	True Fan Cooking	150 - 160	10 - 20	3
Biscuits made with sponge mixture	True Fan Cooking	150 - 160	15 - 20	3
Pastries made with egg white / Meringues	True Fan Cooking	80 - 100	120 - 150	3

Food	Function	Temperature (°C)	Time (min)	Shelf position
Macaroons	True Fan Cooking	100 - 120	30 - 50	3
Biscuits made with yeast dough	True Fan Cooking	150 - 160	20 - 40	3
Puff pastries	True Fan Cooking	170 - 180[1)]	20 - 30	3
Rolls	True Fan Cooking	160[1)]	10 - 25	3
Rolls	Top / Bottom Heat	190 - 210[1)]	10 - 25	3

1) Preheat the oven.

11.6 Bakes and gratins

Food	Function	Temperature (°C)	Time (min)	Shelf position
Pasta bake	Top / Bottom Heat	180 - 200	45 - 60	1
Lasagne	Top / Bottom Heat	180 - 200	25 - 40	1
Vegetables au gratin[1)]	Turbo Grilling	160 - 170	15 - 30	1
Baguettes topped with melted cheese	True Fan Cooking	160 - 170	15 - 30	1
Sweet bakes	Top / Bottom Heat	180 - 200	40 - 60	1
Fish bakes	Top / Bottom Heat	180 - 200	30 - 60	1
Stuffed vegetables	True Fan Cooking	160 - 170	30 - 60	1

1) Preheat the oven.

11.7 Moist Fan Baking

For best results follow the baking times listed in the table below.

Food	Temperature (°C)	Time (min)	Shelf position
Pasta gratin	200 - 220	45 - 55	3
Potato gratin	180 - 200	70 - 85	3
Moussaka	170 - 190	70 - 95	3
Lasagne	180 - 200	75 - 90	3
Cannelloni	180 - 200	70 - 85	3
Bread pudding	190 - 200	55 - 70	3
Rice pudding	170 - 190	45 - 60	3
Apple cake, made with sponge mixture (round cake tin)	160 - 170	70 - 80	3
White bread	190 - 200	55 - 70	3

11.8 Multilevel Baking

Use the function True Fan Cooking.

Cakes / pastries / breads on baking trays

Food	Temperature (°C)	Time (min)	Shelf position	
			2 positions	3 positions
Cream puffs / Eclairs	160 - 180[1)]	25 - 45	1 / 4	-
Dry streusel cake	150 - 160	30 - 45	1 / 4	-

1) Preheat the oven.

Biscuits / small cakes / small cakes / pastries / rolls

Food	Temperature (°C)	Time (min)	Shelf position	
			2 positions	3 positions
Short pastry biscuits	150 - 160	20 - 40	1 / 4	1 / 3 / 5
Biscuits made with sponge mixture	160 - 170	25 - 40	1 / 4	-
Biscuits made with egg white, meringues	80 - 100	130 - 170	1 / 4	-
Macaroons	100 - 120	40 - 80	1 / 4	-

Food	Temperature (°C)	Time (min)	Shelf position	
			2 positions	3 positions
Biscuits made with yeast dough	160 - 170	30 - 60	1 / 4	-
Puff pastries	170 - 180[1)]	30 - 50	1 / 4	-
Rolls	180	20 - 30	1 / 4	-

1) Preheat the oven.

11.9 Slow Cooking

Use this function to prepare lean, tender pieces of meat and fish with core temperatures no more than 65 °C. This function is not applicable to such recipes as pot roast or fatty roast pork. You can use the core temperature sensor to guarantee that the meat has the correct core temperature (see the table for the core temperature sensor).

In the first 10 minutes you can set an oven temperature between 80 °C and 150 °C. The default is 90 °C. After the temperature is set, the oven continues to cook at 80 °C. Do not use this function for poultry.

Always cook without a lid when you use this function.

1. Sear the meat in a pan on the hob on a very high setting for 1 - 2 minutes on each side.
2. Put the meat together with the hot roasting pan into the oven on the wire shelf.
3. Put the core temperature sensor into the meat.
4. Select the function Slow Cooking and set the correct end core temperature.

Food	Quantity	Temperature (°C)	Time (min)	Shelf position
Roast beef	1000 - 1500 g	120	120 - 150	1
Fillet of beef	1000 - 1500 g	120	90 - 150	3
Roast veal	1000 - 1500 g	120	120 - 150	1
Steaks	200 - 300 g	120	20 - 40	3

11.10 Pizza Setting

Food	Temperature (°C)	Time (min)	Shelf position
Pizza (thin crust)	200 - 230[1)2)]	15 - 20	2
Pizza (with a lot of topping)	180 - 200	20 - 30	2
Tarts	180 - 200	40 - 55	1

Food	Temperature (°C)	Time (min)	Shelf position
Spinach flan	160 - 180	45 - 60	1
Quiche Lorraine	170 - 190	45 - 55	1
Swiss Flan	170 - 190	45 - 55	1
Cheesecake	140 - 160	60 - 90	1
Apple cake, covered	150 - 170	50 - 60	1
Vegetable pie	160 - 180	50 - 60	1
Unleavened bread	230 - 250[1)]	10 - 20	2
Puff pastry flan	160 - 180[1)]	45 - 55	2
Flammekuchen (Pizza-like dish from Alsace)	230 - 250[1)]	12 - 20	2
Piroggen (Russian version of calzone)	180 - 200[1)]	15 - 25	2

1) Preheat the oven.

2) Use a deep pan.

11.11 Roasting

Use heat-resistant ovenware.

Roast large roasting joints directly in the tray or on the wire shelf placed above the tray.

Put some water in the tray to prevent the meat juices or fat from burning.

Meat with crackling can be roasted in the roasting tin without the lid.

Turn the roast after 1/2 - 2/3 of the cooking time.

To keep meat more succulent:

- roast lean meat in the roasting tin with the lid or use roasting bag.
- roast meat and fish in large pieces (1 kg or more).
- baste large roasts and poultry with their juices several times during roasting.

11.12 Roasting tables

Beef

Food	Quantity	Function	Temperature (°C)	Time (min)	Shelf position
Pot roast	1 - 1.5 kg	Top / Bottom Heat	230	120 - 150	1
Roast beef or fillet: rare	per cm of thickness	Turbo Grilling	190 - 200[1)]	5 - 6	1

Food	Quantity	Function	Temperature (°C)	Time (min)	Shelf position
Roast beef or fillet: medium	per cm of thickness	Turbo Grilling	180 - 190[1)]	6 - 8	1
Roast beef or fillet: well done	per cm of thickness	Turbo Grilling	170 - 180[1)]	8 - 10	1

1) Preheat the oven.

Pork

Food	Quantity (kg)	Function	Temperature (°C)	Time (min)	Shelf position
Shoulder / Neck / Ham joint	1 - 1.5	Turbo Grilling	160 - 180	90 - 120	1
Chop / Spare rib	1 - 1.5	Turbo Grilling	170 - 180	60 - 90	1
Meatloaf	0.75 - 1	Turbo Grilling	160 - 170	50 - 60	1
Pork knuckle (precooked)	0.75 - 1	Turbo Grilling	150 - 170	90 - 120	1

Veal

Food	Quantity (kg)	Function	Temperature (°C)	Time (min)	Shelf position
Roast veal	1	Turbo Grilling	160 - 180	90 - 120	1
Knuckle of veal	1.5 - 2	Turbo Grilling	160 - 180	120 - 150	1

Lamb

Food	Quantity (kg)	Function	Temperature (°C)	Time (min)	Shelf position
Leg of lamb / Roast lamb	1 - 1.5	Turbo Grilling	150 - 170	100 - 120	1
Saddle of lamb	1 - 1.5	Turbo Grilling	160 - 180	40 - 60	1

Game

Food	Quantity (kg)	Function	Temperature (°C)	Time (min)	Shelf position
Saddle / Leg of hare	up to 1	Top / Bottom Heat	230[1)]	30 - 40	1

Food	Quantity (kg)	Function	Temperature (°C)	Time (min)	Shelf position
Saddle of venison	1.5 - 2	Top / Bottom Heat	210 - 220	35 - 40	1
Haunch of venison	1.5 - 2	Top / Bottom Heat	180 - 200	60 - 90	1

1) Preheat the oven.

Poultry

Food	Quantity (kg)	Function	Temperature (°C)	Time (min)	Shelf position
Poultry portions	0.2 - 0.25 each	Turbo Grilling	200 - 220	30 - 50	1
Half chicken	0.4 - 0.5 each	Turbo Grilling	190 - 210	35 - 50	1
Chicken, poulard	1 - 1.5	Turbo Grilling	190 - 210	50 - 70	1
Duck	1.5 - 2	Turbo Grilling	180 - 200	80 - 100	1
Goose	3.5 - 5	Turbo Grilling	160 - 180	120 - 180	1
Turkey	2.5 - 3.5	Turbo Grilling	160 - 180	120 - 150	1
Turkey	4 - 6	Turbo Grilling	140 - 160	150 - 240	1

Fish (steamed)

Food	Quantity (kg)	Function	Temperature (°C)	Time (min)	Shelf position
Whole fish	1 - 1.5	Top / Bottom Heat	210 - 220	40 - 60	1

11.13 Grilling

- Always grill with the maximum temperature setting.
- Set the shelf into the shelf position as recommended in the grilling table.
- Always set the pan to collect the fat into the first shelf position.
- Grill only flat pieces of meat or fish.
- Always preheat the empty oven with the grill functions for 5 minutes.

CAUTION!
Always grill with the oven door closed.

Grilling

Food	Temperature (°C)	Time (min)		Shelf position
		1st side	2nd side	
Roast beef	210 - 230	30 - 40	30 - 40	2
Filet of beef	230	20 - 30	20 - 30	3
Back of pork	210 - 230	30 - 40	30 - 40	2
Back of veal	210 - 230	30 - 40	30 - 40	2
Back of lamb	210 - 230	25 - 35	20 - 25	3
Whole Fish, 500 - 1000 g	210 - 230	15 - 30	15 - 30	3 / 4

11.14 Frozen Foods

Food	Temperature (°C)	Time (min)	Shelf position
Pizza, frozen	200 - 220	15 - 25	2
Pizza American, frozen	190 - 210	20 - 25	2
Pizza, chilled	210 - 230	13 - 25	2
Pizza Snacks, frozen	180 - 200	15 - 30	2
French Fries, thin	200 - 220	20 - 30	3
French Fries, thick	200 - 220	25 - 35	3
Wedges / Croquettes	220 - 230	20 - 35	3
Hash Browns	210 - 230	20 - 30	3
Lasagne / Cannelloni, fresh	170 - 190	35 - 45	2
Lasagne / Cannelloni, frozen	160 - 180	40 - 60	2
Oven baked cheese	170 - 190	20 - 30	3
Chicken Wings	190 - 210	20 - 30	2

11.15 Defrost

- Remove the food packaging and put the food on a plate.
- Use the first shelf position from the bottom.
- Do not cover the food with a bowl or a plate, as this can extend the defrost time.
- For large portions of food place an upturned empty plate on the bottom of the oven cavity. Put the food in a deep plate or dish and set it on top of the plate inside the oven. Remove shelf supports if necessary.

Food	Quantity (kg)	Defrosting time (min)	Further defrosting time (min)	Comments
Chicken	1	100 - 140	20 - 30	Put the chicken on an upturned saucer in a big plate. Turn halfway through.
Meat	1	100 - 140	20 - 30	Turn halfway through.
Trout	0.15	25 - 35	10 - 15	-
Strawberries	0.3	30 - 40	10 - 20	-
Butter	0.25	30 - 40	10 - 15	-
Cream	2 x 0.2	80 - 100	10 - 15	Whip the cream when still slightly frozen in places.
Gateau	1.4	60	60	-

11.16 Preserving - Bottom Heat

- Use only preserve jars of the same dimensions available on the market.
- Do not use jars with twist-off and bayonet type lids or metal tins.
- Use the first shelf from the bottom for this function.
- Put no more than six one-litre preserve jars on the baking tray.
- Fill the jars equally and close with a clamp.
- The jars cannot touch each other.
- Put approximately 1/2 litre of water into the baking tray to give sufficient moisture in the oven.
- When the liquid in the jars starts to simmer (after approximately 35 - 60 minutes with one-litre jars), stop the oven or decrease the temperature to 100 °C (see the table).

Soft fruit

Food	Temperature (°C)	Cooking time until simmering (min)	Continue to cook at 100 °C (min)
Strawberries / Blueberries / Raspberries / Ripe gooseberries	160 - 170	35 - 45	-

Stone fruit

Food	Temperature (°C)	Cooking time until simmering (min)	Continue to cook at 100 °C (min)
Pears / Quinces / Plums	160 - 170	35 - 45	10 - 15

Vegetables

Food	Temperature (°C)	Cooking time until simmering (min)	Continue to cook at 100 °C (min)
Carrots[1)]	160 - 170	50 - 60	5 - 10
Cucumbers	160 - 170	50 - 60	-
Mixed pickles	160 - 170	50 - 60	5 - 10
Kohlrabi / Peas / Asparagus	160 - 170	50 - 60	15 - 20

1) Leave standing in the oven after it is deactivated.

11.17 Drying - True Fan Cooking

- Cover trays with grease proof paper or baking parchment.
- For a better result, stop the oven halfway through the drying time, open the door and let it cool down for one night to complete the drying.

Vegetables

Food	Temperature (°C)	Time (h)	Shelf position	
			1 position	2 positions
Beans	60 - 70	6 - 8	3	1 / 4
Peppers	60 - 70	5 - 6	3	1 / 4
Vegetables for sour	60 - 70	5 - 6	3	1 / 4
Mushrooms	50 - 60	6 - 8	3	1 / 4
Herbs	40 - 50	2 - 3	3	1 / 4

Fruit

Food	Temperature (°C)	Time (h)	Shelf position	
			1 position	2 positions
Plums	60 - 70	8 - 10	3	1 / 4
Apricots	60 - 70	8 - 10	3	1 / 4
Apple slices	60 - 70	6 - 8	3	1 / 4
Pears	60 - 70	6 - 9	3	1 / 4

11.18 Food Sensor table

Beef	Food core temperature (°C)		
	Rare	Medium	Well done
Roast beef	45	60	70

Beef	Food core temperature (°C)		
	Rare	Medium	Well done
Sirloin	45	60	70

Beef	Food core temperature (°C)		
	Less	Medium	More
Meat loaf	80	83	86

Pork	Food core temperature (°C)		
	Less	Medium	More
Ham, Roast	80	84	88
Chop (saddle), Smoked pork loin, Smoked loin poached	75	78	82

Veal	Food core temperature (°C)		
	Less	Medium	More
Roast veal	75	80	85
Knuckle of veal	85	88	90

Mutton / lamb	Food core temperature (°C)		
	Less	Medium	More
Leg of mutton	80	85	88
Saddle of mutton	75	80	85
Leg of lamb, Roast lamb	65	70	75

Game	Food core temperature (°C)		
	Less	Medium	More
Saddle of hare, Saddle of venison	65	70	75
Leg of hare, Whole hare, Leg of venison	70	75	80

Poultry	Food core temperature (°C)		
	Less	Medium	More
Chicken (whole / half / breast)	80	83	86
Duck (whole / half), Turkey (whole / breast)	75	80	85
Duck (breast)	60	65	70

Fish (salmon, trout, zander)	Food core temperature (°C)		
	Less	Medium	More
Fish (whole / large / steamed), Fish (whole / large / roasted)	60	64	68

Casseroles - Precooked vegetables	Food core temperature (°C)		
	Less	Medium	More
Zucchini Casserole, Broccoli Casserole, Fennel Casserole	85	88	91

Casseroles - Savoury	Food core temperature (°C)		
	Less	Medium	More
Cannelloni, Lasagne, Pasta bake	85	88	91

Casseroles - Sweet	Food core temperature (°C)		
	Less	Medium	More
White bread casserole with / without fruits, Rice porridge casserole with / without fruits, Sweet noodle casserole	80	85	90

11.19 Information for test institutes

Tests according to EN 60350-1:2013 and IEC 60350-1:2011.

Baking on one level. Baking in tins

Food	Function	Temperature (°C)	Time (min)	Shelf position
Fatless sponge cake	True Fan Cooking	140 - 150	35 - 50	2
Fatless sponge cake	Top / Bottom Heat	160	35 - 50	2
Apple pie (2 tins Ø20 cm, diagonally off set)	True Fan Cooking	160	60 - 90	2
Apple pie (2 tins Ø20 cm, diagonally off set)	Top / Bottom Heat	180	70 - 90	1

Baking on one level. Biscuits

Food	Function	Temperature (°C)	Time (min)	Shelf position
Short bread / Pastry stripes	True Fan Cooking	140	25 - 40	3
Short bread / Pastry stripes	Top / Bottom Heat	160 1)	20 - 30	3
Small cakes (20 per tray)	True Fan Cooking	150 1)	20 - 35	3
Small cakes (20 per tray)	Top / Bottom Heat	170 1)	20 - 30	3

1) Preheat the oven.

Multilevel Baking. Biscuits

Food	Function	Temperature (°C)	Time (min)	Shelf position	
				2 positions	3 positions
Short bread / Pastry Stripes	True Fan Cooking	140	25 - 45	1 / 4	1 / 3 / 5
Small cakes (20 per tray)	True Fan Cooking	150 1)	23 - 40	1 / 4	-

1) Preheat the oven.

Grilling
Preheat the empty oven for 5 minutes.

Food	Function	Temperature (°C)	Time (min)	Shelf position
Toast	Grilling	max	1 - 3	5

Food	Function	Temperature (°C)	Time (min)	Shelf position
Beef Steak	Grilling	max	24 - 30[1)]	4

1) Turn halfway through.

Fast Grilling
Preheat the empty oven for 3 minutes.

Grill with the maximum temperature setting.

Food	Time (min)		Shelf position
	1st side	2nd side	
Burgers	8 - 10	6 - 8	4
Toast	1 - 3	1 - 3	4

12. CARE AND CLEANING

WARNING!
Refer to Safety chapters.

12.1 Notes on cleaning

Clean the front of the oven with a soft cloth with warm water and a mild cleaning agent.

To clean metal surfaces, use a dedicated cleaning agent.

Clean the oven interior after each use. Fat accumulation or other food remains may result in a fire. The risk is higher for the grill pan.

Clean all accessories after each use and let them dry. Use a soft cloth with warm water and a cleaning agent.

Clean stubborn dirt with a special oven cleaner.

If you have nonstick accessories, do not clean them using aggressive agents, sharp-edged objects or a dishwasher. It can cause damage to the nonstick coating.

Clean the moisture from the cavity after each use.

12.2 Removing the shelf supports

To clean the oven, remove the shelf supports.

CAUTION!
Be careful when you remove the shelf supports.

1. Pull the front of the shelf support away from the side wall.

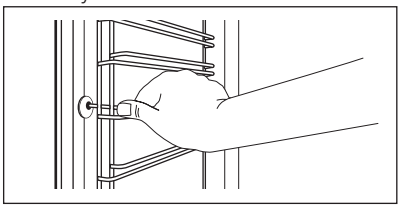

2. Pull the rear end of the shelf support away from the side wall and remove it.

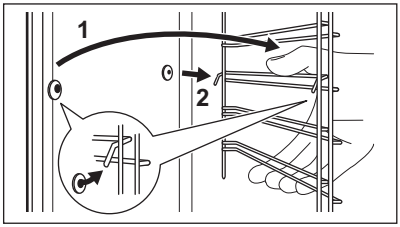

Install the removed accessories in the opposite sequence.

12.3 Pyrolysis

CAUTION!
Remove all accessories and removable shelf supports.

The pyrolytic cleaning procedure cannot start:
- if you did not remove the core temperature sensor plug from the socket. In some models, the display shows "C2" when this error occurs.
- if you did not fully close the oven door. In some models, the display shows "C3" when this error occurs.

CAUTION!
If there are other appliances installed in the same cabinet, do not use them at the same time as the Pyrolysis function. It can cause damage to the oven.

During the pyrolytic cleaning the door is locked. The symbol and the bars of the heat indicator come up, until the door unlocks. The door unlocks when the temperature inside the oven is under safety conditions and the pyrolytic cleaning finishes.

During the pyrolytic cleaning the lamp is turned off.

1. Remove the worst dirt manually.
2. Clean the inner side of the door with hot water, so that the residues do not burn from the hot air.
3. Turn on the oven.
4. Set the Pyrolysis function. Refer to "Oven functions".
5. Press OK.
6. Press ∧ or ∨ to set the duration of the cleaning procedure:

Option	Description
1	1 h for a low degree of dirt
2	1 h 30 min for a usual degree of dirt
3	3 h for a high degree of dirt

You can use the End function to delay the start of the cleaning procedure.

7. Press OK to confirm.

12.4 Cleaning reminder

To remind you that the pyrolytic cleaning is necessary, the cleaning reminder symbol flashes in the display after each deactivation of the appliance for the next 10 seconds.

The cleaning reminder goes out:
- after the end of the pyrolytic cleaning.
- when you deactivate it in the basic settings. Refer to "Using the settings menu".

12.5 Removing and installing the door

You can remove the door and the internal glass panels to clean it. The number of glass panels is different for different models.

WARNING!
The door is heavy.

1. Open the door fully.
2. Fully lift up the clamping levers (A) on the two door hinges.

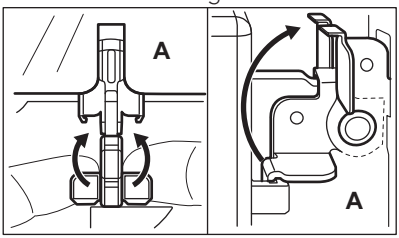

3. Close the door until it is at an angle of approximately 45°.

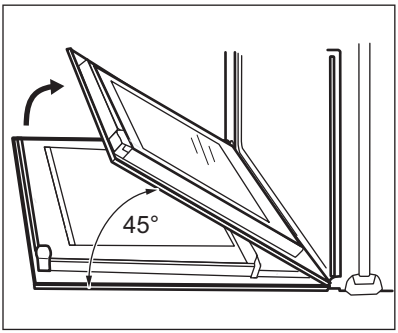

4. Hold the door with one hand on each side and pull it away from the oven at an upwards angle.
5. Put the door with the outer side down on a soft cloth on a stable surface.
6. Hold the door trim (B) on the top edge of the door at the two sides and push inwards to release the clip seal.

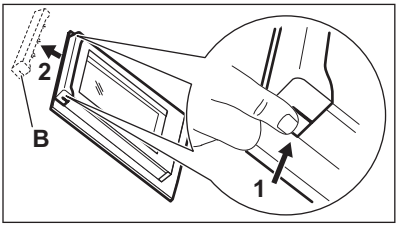

CAUTION!
Rough handling of the glass, especially around the edges of the front panel, can cause the glass to break.

7. Pull the door trim to the front to remove it.
8. Hold the door glass panels on their top edge one by one and pull them up out of the guide.

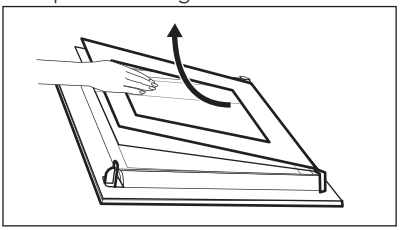

9. Clean the glass panel with water and soap. Dry the glass panel carefully.

When the cleaning is completed, do the above steps in the opposite sequence. Install the smaller panel first, then the larger and the door.

WARNING!
Make sure that the glasses are inserted in the correct position otherwise the surface of the door may overheat.

Make sure that you put the glass panels (C, B and A) back in the correct sequence. First, insert panel C, which has a square printed on the left side and a triangle on the right side. You will also find those symbols embossed on the door frame. The triangle symbol on the glass must match the triangle on the door frame, and the square symbol must match the square. After that insert the other two glass panels.

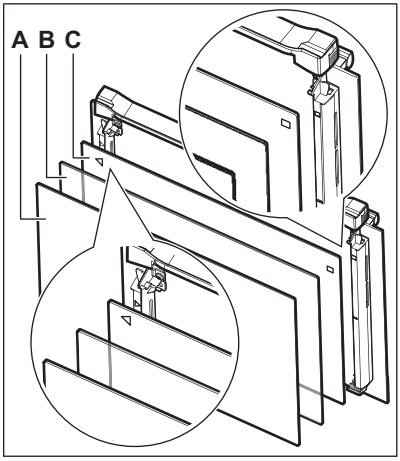

12.6 Replacing the lamp

WARNING!
Risk of electric shock.
The lamp can be hot.

1. Turn off the oven.

Wait until the oven is cooled down.

2. Disconnect the oven from the mains.
3. Put a cloth on the bottom of the cavity.

The top lamp

1. Turn the lamp glass cover to remove it.

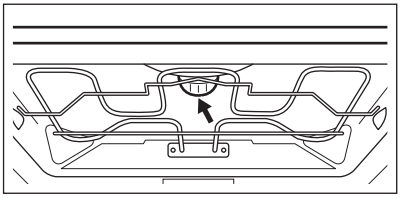

2. Clean the glass cover.
3. Replace the lamp with a suitable 300 °C heat-resistant lamp.
4. Install the glass cover.

The side lamp

1. Remove the left shelf support to get access to the lamp.
2. Use a narrow, blunt object (e.g. a teaspoon) to remove the glass cover.

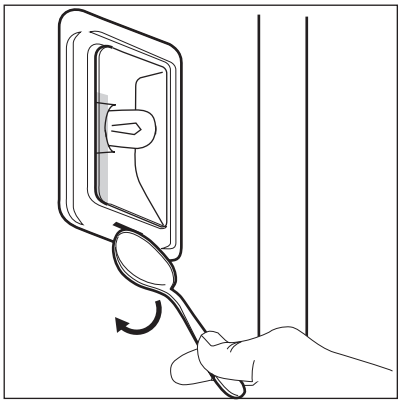

3. Clean the glass cover.
4. Replace the lamp with a suitable 300 °C heat-resistant lamp.
5. Install the glass cover.
6. Install the left shelf support.

13. TROUBLESHOOTING

WARNING!
Refer to Safety chapters.

13.1 What to do if...

Problem	Possible cause	Remedy
You cannot activate or operate the oven.	The oven is not connected to an electrical supply or it is connected incorrectly.	Check if the oven is correctly connected to the electrical supply (refer to the connection diagram if available).
The oven does not heat up.	The oven is deactivated.	Activate the oven.
The oven does not heat up.	The clock is not set.	Set the clock.
The oven does not heat up.	The necessary settings are not set.	Make sure that the settings are correct.
The oven does not heat up.	The automatic switch-off is activated.	Refer to "Automatic switch-off".
The oven does not heat up.	The Child Lock is on.	Refer to "Using the Child Lock".

Problem	Possible cause	Remedy
The oven does not heat up.	The fuse is blown.	Make sure that the fuse is the cause of the malfunction. If the fuse is blown again and again, contact a qualified electrician.
The lamp does not operate.	The lamp is defective.	Replace the lamp.
The display does not show the time during the off status.	The display is deactivated.	Touch ⏲ and ∧ at the same time to activate the display again.
The core temperature sensor does not operate.	The plug of the core temperature sensor is not correctly installed into the socket.	Put the plug of the core temperature sensor as far as possible into the socket.
It takes too long to cook the dishes or they cook too quickly.	The temperature is too low or too high.	Adjust the temperature if necessary. Follow the advice in the user manual.
Steam and condensation settle on the food and in the cavity of the oven.	You left the dish in the oven for too long.	Do not leave the dishes in the oven for longer than 15 - 20 minutes after the cooking process ends.
The display shows "C2".	You want to start the Pyrolysis or Defrost function, but you did not remove the core temperature sensor plug from the socket.	Remove the core temperature sensor plug from the socket.
The display shows "C3".	The cleaning function does not operate. You did not fully close the door, or the door lock is defective.	Fully close the door.
The display shows "F102".	• You did not fully close the door. • The door lock is defective.	• Fully close the door. • Deactivate the oven with the house fuse or the safety switch in the fuse box and activate it again. • If the display shows "F102" again, contact the Customer Care Department.

Problem	Possible cause	Remedy
The display shows an error code that is not in this table.	There is an electrical fault.	• Deactivate the oven with the house fuse or the safety switch in the fuse box and activate it again. • If the display shows the error code again, contact the Customer Care Department.
The appliance is activated and does not heat up. The fan does not operate. The display shows **"Demo"**.	The demo mode is activated.	Refer to "Using the settings menu" in "Additional functions" chapter.

13.2 Service data

If you cannot find a solution to the problem yourself, contact your dealer or an Authorised Service Centre.

The necessary data for the service centre is on the rating plate. The rating plate is on the front frame of the oven cavity. Do not remove the rating plate from the oven cavity.

We recommend that you write the data here:	
Model (MOD.)	.....
Product number (PNC)	.....
Serial number (S.N.)	.....

14. ENERGY EFFICIENCY

14.1 Product Fiche and information according to EU 65-66/2014

Supplier's name	AEG
Model identification	BPE642020M BPK642020M
Energy Efficiency Index	81.2
Energy efficiency class	A+
Energy consumption with a standard load, conventional mode	1.09 kWh/cycle
Energy consumption with a standard load, fan-forced mode	0.69 kWh/cycle
Number of cavities	1

Heat source	Electricity	
Volume	71 l	
Type of oven	Built-In Oven	
Mass	BPE642020M	36.0 kg
	BPK642020M	37.0 kg

EN 60350-1 - Household electric cooking appliances - Part 1: Ranges, ovens, steam ovens and grills - Methods for measuring performance.

14.2 Energy saving



The oven contains features which help you save energy during everyday cooking.

General hints
Make sure that the oven door is closed properly when the oven operates. Do not open the door too often during cooking. Keep the door gasket clean and make sure it is well fixed in its position.

Use metal dishes to improve energy saving.

When possible, do not preheat the oven before you put the food inside.

When the cooking duration is longer than 30 minutes, reduce the oven temperature to minimum 3 - 10 minutes before the end of the cooking time, depending on the duration of the cooking. The residual heat inside the oven will continue to cook.

Use the residual heat to warm up other dishes.

Keep breaks between baking as short as possible when you prepare few dishes at one time.

Cooking with fan
When possible, use the cooking functions with fan to save energy.

Residual heat
If a programme with the Duration or End Time selection is activated and the cooking time is longer than 30 minutes, the heating elements automatically deactivate earlier in some oven functions.

The fan and lamp continue to operate.

Keep food warm
Choose the lowest possible temperature setting to use residual heat and keep a meal warm. The residual heat indicator or temperature appears on the display.

Cooking with the lamp off
Turn off the lamp during cooking. Turn it on only when you need it.

Moist Fan Baking
Function designed to save energy during cooking.

When you use Moist Fan Baking, the lamp automatically turns off after 30 seconds. You may turn on the lamp again but this action will reduce the expected energy savings.

Deactivating the display
You can turn off the display. Press and hold ⏲ and ∧ at the same time. To turn it on repeat this step.

15. ENVIRONMENTAL CONCERNS

Recycle materials with the symbol ♺. Put the packaging in relevant containers to recycle it. Help protect the environment and human health by recycling waste of electrical and electronic appliances. Do not dispose of appliances marked with the symbol with the household waste. Return the product to your local recycling facility or contact your municipal office.

www.aeg.com/shop



867336432-B-482017

CE

AEG