W11I MS180 UK

12NC: 859991552670

GTIN (EAN) code: 8003437396236

SENSING THE DIFFERENCE



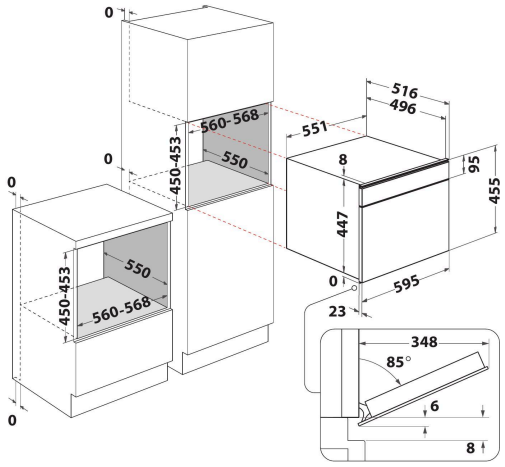

- 6TH Sense technology
- 6thSense Live
- Up to 100 6th Sense Cooking Combinations
- Energy class A
- Cavity 29 L
- Defrost function
- Forced Air Fan Cooking
- Door Glasses Number: 3
- Integrated handle
- Child Lock
- 1 Grid
- 1 Tray
- Electronic Temperature Control
- Dark Grey Glass and Stainless steel Bottom Front Trim
- Niche dimensions (HxWxD): %Z_NICHE_SIZE% mm
- Dimensions HxWxD: 455x595x537 mm
- Product Segment: Flagship

Whirlpool built in oven - W11I MS180 UK

This Whirlpool built in Oven features: exclusive 6th SENSE technology, that allows you to pick among a variety of pre-programmed recipes, and your oven will automatically adjust cooking, temperature and time settings, to ensure perfect results.

Reheat
Fast reheating. Your reheated meal will taste as good as it did when it was first cooked, with the fast, intuitive Reheat function.

Defrost
Effortless defrosting. The Defrost function delicately defrosts your food, to ensure great taste and texture, in little time.

6th Sense W11
No more guesswork. Simply pick your recipes, and let 6th SENSE cook them to perfection, every time. Up to 100 cooking combinations organized to fit your lifestyle and diet, for a full assisted cooking experience.

6th Sense Live App
6TH SENSE technology automatically adjusts time, temperature, and humidity settings to ensure perfect results time after time. With the 6TH SENSE sensors and an exciting choice of exclusive options, consumers can whip up the perfect meal while enjoying an unparalleled intuitive experience.

6TH SENSE technology W11
No more guesswork. Simply pick your recipes, and let 6th SENSE cook them to perfection, every time. Up to 80 cooking combinations organized to fit your lifestyle and diet, for a full assisted cooking experience.

Forced Air Plus steam
Ideal cooking results. This Whirlpool Oven combines the efficient, even and thorough cooking results of Forced Air technology, with the healthy, natural action of steam.

Small cavity
This Whirlpool Oven features a compact-size cavity.

Energy class
Outstanding energy savings. Ovens with an A/ A+ energy rating offer an excellent level of energy efficiency, ensuring lower consumption and saving you money on your energy bills.

Forced Air
Seal in the taste. Thanks to the Forced Air technology, preheated air is circulated inside your Oven using an innovative convection system, giving you moist, juicy cooking results.

W11I MS180 UK

12NC: 859991552670

GTIN (EAN) code: 8003437396236

Whirlpool
SENSING THE DIFFERENCE

MAIN FEATURES

Product group	Oven
Commercial code	W11I MS180 UK
Main colour of product	Dark grey
Construction type	Built-in
Type of control	Electronic
Type of control settings	LCD
Are any hobs controls integrated?	-
Which kind of hobs can be controlled?	-
Automatic programmes	Yes
Current (A)	10
Voltage (V)	220-240
Frequency (Hz)	50/60
Length of Electrical Supply Cord (cm)	125
Plug type	UK
Depth with open door 90 degree (mm)	-
Height of the product	455
Width of the product	595
Depth of the product	537
Minimum niche height	450
Minimum niche width	556
Niche depth	550
Net weight (kg)	30
Usable volume (of cavity)	29
Integrated Cleaning system	-
Grids of the cavity	1
Trays	1

TECHNICAL FEATURES

Timer	Yes
Time control	Electronic
Time-setting options	Start and Stop
Safety device	-
Interior light	Yes
Number of interior lights of the cavity	1
Position of interior lights of the cavity	-
Oven guides of the cavity	Grids
Probe of the cavity	Yes

PERFORMANCES

Energy input	-
Type of energy of the cavity	Electricity
Energy efficiency class - NEW (2010/30/EU)	A
Energy consumption per cycle conventional - NEW (2010/30/EU)	0
Energy consumption per cycle forced air convection - NEW (2010/30/EU)	0.6

