FSS53907Z

EN **User Manual**
Dishwasher

USER MANUAL

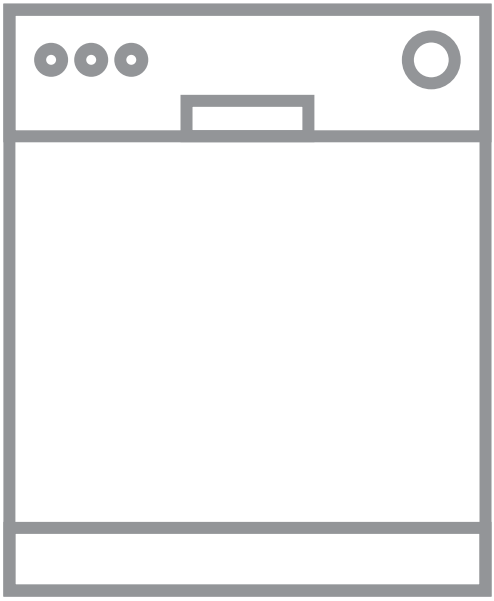

AEG

CONTENTS

1. SAFETY INFORMATION....2
2. SAFETY INSTRUCTIONS....4
3. PRODUCT DESCRIPTION....6
4. CONTROL PANEL....7
5. BEFORE FIRST USE....8
6. PROGRAMME SELECTION....9
7. BASIC SETTINGS....11
8. DAILY USE....14
9. HINTS AND TIPS....16
10. CARE AND CLEANING....17
11. TROUBLESHOOTING....20
12. PRODUCT INFORMATION SHEET....24
13. ADDITIONAL TECHNICAL INFORMATION....24

FOR PERFECT RESULTS

Thank you for choosing this AEG product. We have created it to give you impeccable performance for many years, with innovative technologies that help make life simpler - features you might not find on ordinary appliances. Please spend a few minutes reading to get the very best from it.
Visit our website for:



Get usage advice, brochures, trouble shooter, service information:
www.aeg.com/webselfservice



Register your product for better service:
www.registeraeg.com



Buy Accessories, Consumables and Original spare parts for your appliance:
www.aeg.com/shop

CUSTOMER CARE AND SERVICE

Always use original spare parts.
When contacting our Authorised Service Centre, ensure that you have the following data available: Model, PNC, Serial Number.
The information can be found on the rating plate.

⚠ Warning / Caution-Safety information

ⓘ General information and tips

Environmental information

Subject to change without notice.

1. ⚠ SAFETY INFORMATION

Before the installation and use of the appliance, carefully read the supplied instructions. The

manufacturer is not responsible for any injuries or damage that are the result of incorrect installation or usage. Always keep the instructions in a safe and accessible location for future reference.

1.1 Children and vulnerable people safety

- This appliance can be used by children aged from 8 years and above and persons with reduced physical, sensory or mental capabilities or lack of experience and knowledge if they have been given supervision or instruction concerning the use of the appliance in a safe way and understand the hazards involved.
- Children between 3 and 8 years of age and persons with very extensive and complex disabilities shall be kept away from the appliance unless continuously supervised.
- Children of less than 3 years of age should be kept away from the appliance unless continuously supervised.
- Do not let children play with the appliance.
- Keep detergents away from children.
- Keep children and pets away from the appliance when the door is open.
- Children shall not carry out cleaning and user maintenance of the appliance without supervision.

1.2 General Safety

- This appliance is intended to be used in household and similar applications such as:
  - farm houses; staff kitchen areas in shops, offices and other working environments;
  - by clients in hotels, motels, bed & breakfast and other residential type environments.
- Do not change the specification of this appliance.
- The operating water pressure (minimum and maximum) must be between 0.5 (0.05) / 8 (0.8) bar (MPa)
- Follow the maximum number of 14 place settings.

- If the supply cord is damaged, it must be replaced by the manufacturer, its Authorised Service Centre or similarly qualified persons in order to avoid a hazard.
- Put the cutlery in the cutlery basket with the sharp ends pointing down or put them in the cutlery drawer in a horizontal position with the sharp edges down.
- Do not leave the appliance with the open door unattended to avoid stepping accidentally onto it.
- Before any maintenance operation, deactivate the appliance and disconnect the mains plug from the socket.
- Do not use high pressure water sprays and/or steam to clean the appliance.
- If the appliance has ventilation openings in the base, they must not be covered e.g. by a carpet.
- The appliance is to be connected to the water mains using the new supplied hose-sets. Old hose sets must not be reused.

2. SAFETY INSTRUCTIONS

2.1 Installation

WARNING!
Only a qualified person must install this appliance.

- Remove all the packaging.
- Do not install or use a damaged appliance.
- Do not use the appliance before installing it in the built-in structure due to safety manner.
- Follow the installation instructions supplied with the appliance.
- Always take care when moving the appliance as it is heavy. Always use safety gloves and enclosed footwear.
- Do not install or use the appliance where the temperature is less than 0 °C.
- Install the appliance in a safe and suitable place that meets installation requirements.

2.2 Electrical connection

WARNING!
Risk of fire and electric shock.

- The appliance must be earthed.
- Make sure that the parameters on the rating plate are compatible with the electrical ratings of the mains power supply.
- Always use a correctly installed shockproof socket.
- Do not use multi-plug adapters and extension cables.
- Make sure not to cause damage to the mains plug and to the mains cable. Should the mains cable need to be replaced, this must be carried out by our Authorised Service Centre.
- Connect the mains plug to the mains socket only at the end of the installation. Make sure that there is access to the mains plug after the installation.

- Do not pull the mains cable to disconnect the appliance. Always pull the mains plug.
- This appliance is fitted with a 13 A mains plug. If it is necessary to change the mains plug fuse, use only a 13 A ASTA (BS 1362) fuse (UK and Ireland only).

2.3 Water connection

- Do not cause damage to the water hoses.
- Before connection to new pipes, pipes not used for a long time, where repair work has been carried out or new devices fitted (water meters, etc.), let the water flow until it is clean and clear.
- Ensure that there are no visible water leaks during and after the first use of the appliance.
- The water inlet hose has a safety valve and a sheath with an inner mains cable.

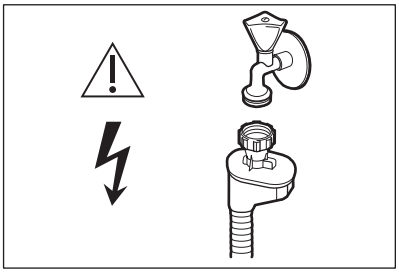

WARNING!
Dangerous voltage.

- If the water inlet hose is damaged, immediately close the water tap and disconnect the mains plug from the mains socket. Contact the Authorised Service Centre to replace the water inlet hose.

2.4 Use

- Do not put flammable products or items that are wet with flammable products in, near or on the appliance.
- Dishwasher detergents are dangerous. Follow the safety instructions on the detergent packaging.
- Do not drink and play with the water in the appliance.
- Do not remove the dishes from the appliance until the programme is complete. Some detergent may remain on the dishes.
- Do not sit or stand on the open door of the appliance.
- The appliance can release hot steam if you open the door while a programme operates.

2.5 Service

- To repair the appliance contact the Authorised Service Centre.
- Use original spare parts only.

2.6 Disposal

WARNING!
Risk of injury or suffocation.

- Disconnect the appliance from the mains supply.
- Cut off the mains cable and discard it.
- Remove the door catch to prevent children and pets to get closed in the appliance.

3. PRODUCT DESCRIPTION

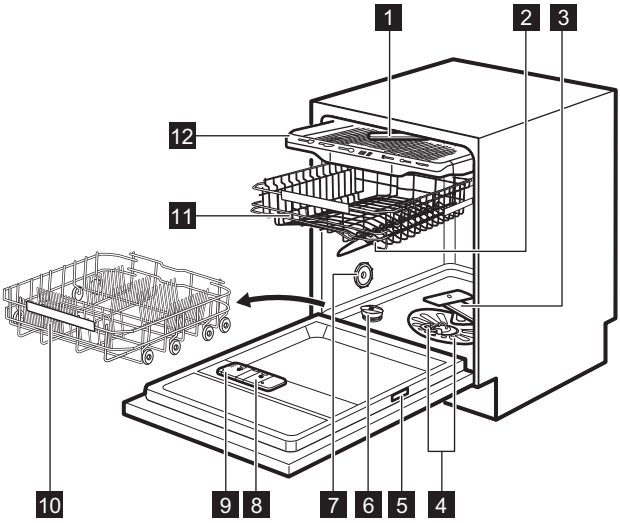

1 Ceiling spray arm
2 Upper spray arm
3 Lower spray arm
4 Filters
5 Rating plate
6 Salt container
7 Air vent
8 Rinse aid dispenser
9 Detergent dispenser
10 Lower basket
11 Upper basket
12 Cutlery drawer

3.1 Beam-on-Floor

The Beam-on-Floor is a light that is displayed on the floor below the appliance door.

- When the programme starts, a red light comes on and stays on for the duration of the programme.
- When the programme is completed, a green light comes on.
- When the appliance has a malfunction, the red light flashes.

The Beam-on-Floor is off when the appliance is deactivated.

When AirDry is activated during the drying phase, the projection on the floor may not be completely visible. To see if the cycle has ended, check the control panel.

4. CONTROL PANEL

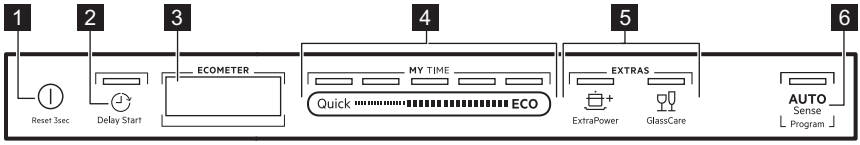

1 On/Off button
2 Delay Start button
3 Display
4 MY TIME selection bar
5 EXTRAS buttons
6 AUTO Sense button

4.1 Display

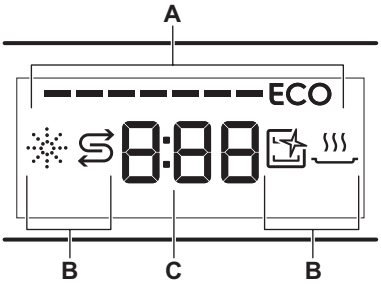

A. ECOMETER
B. Indicators
C. Time indicator

4.2 ECOMETER



The ECOMETER indicates how the programme selection impacts energy and water consumption. The more bars are on, the lower the consumption is.

ECO indicates the most environmentally friendly programme selection for a normally soiled load.

4.3 Indicators

Indicator	Description
	Rinse aid indicator. It is on when the rinse aid dispenser needs refilling. Refer to **"Before first use"**.
	Salt indicator. It is on when the salt container needs refilling. Refer to **"Before first use"**.
	Machine Care indicator. It is on when the appliance needs internal cleaning with the Machine Care programme. Refer to **"Care and cleaning"**.
	Drying phase indicator. It is on when a programme with the drying phase is selected. It flashes when the drying phase operates. Refer to **"Programme selection"**.

5. BEFORE FIRST USE

1. **Make sure that the current level of the water softener agrees with the hardness of the water supply. If not, adjust the level of the water softener.**
2. Fill the salt container.
3. Fill the rinse aid dispenser.
4. Open the water tap.
5. Start the programme Quick to remove any residuals from the manufacturing process. Do not use detergent and do not put dishes in the baskets.

After starting the programme, the appliance recharges the resin in the water softener for up to 5 minutes. The washing phase starts only after this procedure is complete. The procedure is repeated periodically.

5.1 The salt container

CAUTION!
Use rough salt designed for dishwashers only. Fine salt increases the risk of corrosion.

The salt is used to recharge the resin in the water softener and to assure good washing results in daily use.

How to fill the salt container

1. Turn the cap of the salt container counterclockwise and remove it.
2. Put 1 litre of water in the salt container (only for the first time).
3. Fill the salt container with 1 kg of salt (until it is full).

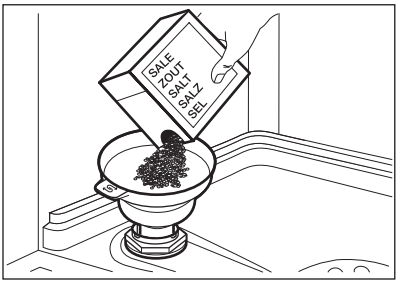

4. Carefully shake the funnel by its handle to get the last granules inside.
5. Remove the salt around the opening of the salt container.

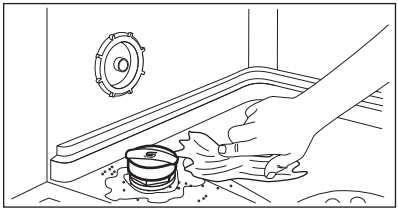

6. Turn the cap of the salt container clockwise to close the salt container.

CAUTION!
Water and salt can come out of the salt container when you fill it. After you fill the salt container, immediately start a programme to prevent corrosion.

5.2 How to fill the rinse aid dispenser

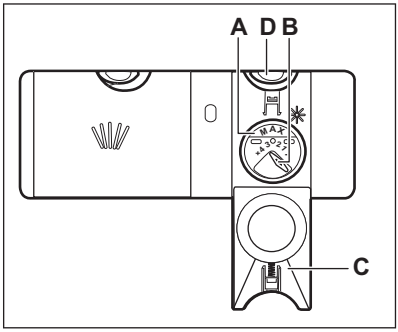

CAUTION!
Only use rinse aid specifically designed for dishwashers.

1. Press the release button (**D**) to open the lid (**C**).
2. Pour the rinse aid in the dispenser (**A**) until the liquid reaches the fill level 'max'.

3. Remove the spilled rinse aid with an absorbent cloth to prevent too much foam.
4. Close the lid. Make sure that the release button locks into position.

You can turn the selector of the released quantity (**B**) between position 1 (lowest quantity) and position 4 or 6 (highest quantity).

6. PROGRAMME SELECTION

6.1 MY TIME

Using MY TIME selection bar, you can select a suitable wash cycle based on programme duration, ranging from 30 minutes to four hours.

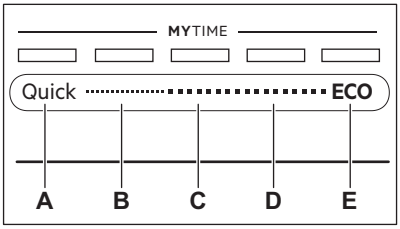

A. **Quick** is the shortest programme (**30min**) suitable for washing a load with fresh and light soil.
B. **1h** is a programme suitable for washing a load with fresh and lightly dried-on soil.
C. **1h 30min** is a programme suitable for washing and drying normally soiled items.
D. **2h 40min** is a programme suitable for washing and drying heavily soiled items.
E. **ECO** is the longest programme (**4h**) offering the most efficient use of energy and water consumption for crockery and cutlery with normal soil. This is the standard programme for test institutes.

6.2 EXTRAS

You can adjust the programme selection to your needs by activating EXTRAS.

ExtraPower

ExtraPower improves the washing results of the selected programme. The option increases the wash temperature and duration.

GlassCare

GlassCare provides special care for a delicate load. The option prevents rapid changes in the wash temperature of the selected programme and reduces it to 45 °C. This protects glassware in particular from damaging.

6.3 AUTO Sense

The AUTO Sense program automatically adjusts the wash cycle to the type of load.

The appliance senses the degree of soil and the amount of dishes in the baskets. It adjusts the temperature and quantity of water as well as the wash duration.

6.4 Programmes overview

Pro-gramme	Type of load	Degree of soil	Programme phases	EXTRAS
Quick	• Crockery • Cutlery	• Fresh	• Wash 50 °C • Intermediate rinse • Final rinse 45 °C • AirDry	• ExtraPower • GlassCare

Pro-gramme	Type of load	Degree of soil	Programme phases	EXTRAS
1h	• Crockery • Cutlery	• Fresh • Lightly dried-on	• Wash 60 °C • Intermediate rinse • Final rinse 50 °C • AirDry	• ExtraPower • GlassCare
1h 30min	• Crockery • Cutlery • Pots • Pans	• Normal • Lightly dried-on	• Wash 60 °C • Intermediate rinse • Final rinse 55 °C • Drying • AirDry	• ExtraPower • GlassCare
2h 40min	• Crockery • Cutlery • Pots • Pans	• Normal to heavy • Dried-on	• Prewash • Wash 60 °C • Intermediate rinse • Final rinse 60 °C • Drying • AirDry	• ExtraPower • GlassCare
ECO	• Crockery • Cutlery • Pots • Pans	• Normal • Lightly dried-on	• Prewash • Wash 50 °C • Intermediate rinse • Final rinse 55 °C • Drying • AirDry	• ExtraPower • GlassCare
AUTO Sense	• Crockery • Cutlery • Pots • Pans	The pro-gramme ad-justs to all de-grees of soil.	• Prewash • Wash 50 - 60 °C • Intermediate rinse • Final rinse 60 °C • Drying • AirDry	EXTRAS are not ap-plicable to this pro-gramme.
Machine Care	• No load	The pro-gramme cleans the ap-pliance interi-or.	• Wash 70 °C • Intermediate rinse • Final rinse • AirDry	EXTRAS are not ap-plicable to this pro-gramme.

Consumption values

Programme [1)]	Water (l)	Energy (kWh)	Duration (min)
Quick	9.9 -12.1	0.56 - 0.69	30
1h	10.4 - 12.7	0.83 - 0.96	60
1h 30min	10.3 - 12.6	0.96 - 1.09	90
2h 40min	9.8 - 12.0	1.05 - 1.18	160
ECO	10.5	0.832	240

Programme [1]	Water (l)	Energy (kWh)	Duration (min)
AUTO Sense	8.7 - 12.0	0.75 - 1.18	120 - 170
Machine Care	8.9 - 10.9	0.60 - 0.72	60

[1] The pressure and the temperature of the water, the variations of the mains supply, the options and the quantity of dishes can change the values.

Information for test institutes

To receive the necessary information for conducting performance tests (e.g. according to EN60436), send an email to:

info.test@dishwasher-production.com

In your request please include the product number code (PNC) found on the rating plate.

For any other questions regarding your dishwasher please refer to the service book provided with your appliance.

7. BASIC SETTINGS

You can configure the appliance by changing basic settings according to your needs.

Number	Settings	Values	Description[1]
1	Water hardness	From level 1L to level 10L (default: 5L)	Adjust the level of the water softener according to the water hardness in your area.
2	Rinse aid empty notification	On (default) Off	Activate or deactivate the rinse aid indicator.
3	End sound	On Off (default)	Activate or deactivate the acoustic signal for the end of a programme.
4	Auto door open	On (default) Off	Activate or deactivate the AirDry.
5	Key tones	On (default) Off	Activate or deactivate the sound of the buttons when pressed.
6	Latest programme selection	On Off (default)	Enable or disable the automatic selection of the most recently used programme and options.

[1] For more details, refer to the information provided in this chapter.

You can change the basic settings in setting mode.

When the appliance is in setting mode, the bars of the ECOMETER represent available settings. For each setting, a dedicated bar of the ECOMETER flashes.

The order of the basic settings presented in the table is also the order of the settings on the ECOMETER:

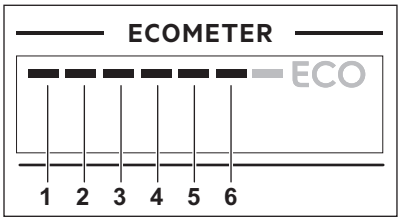

7.1 The water softener

The water softener removes minerals from the water supply, which would have a negative effect on the washing results and on the appliance.

The higher the content of these minerals, the harder your water is. Water hardness is measured in equivalent scales.

The water softener should be adjusted according to the hardness of the water in your area. Your local water authority can advise you on the hardness of the water in your area. It is important to set the right level of the water softener to assure good washing results.

Softening hard water increases the consumption of water and energy as well as the programme duration. The higher the level of water softener, the higher the consumption and the longer the duration.

Water hardness

German degrees (°dH)	French degrees (°fH)	mmol / l	Clarke degrees	Water softener level
47 - 50	84 - 90	8.4 - 9.0	58 - 63	10
43 - 46	76 - 83	7.6 - 8.3	53 - 57	9
37 - 42	65 - 75	6.5 - 7.5	46 - 52	8
29 - 36	51 - 64	5.1 - 6.4	36 - 45	7
23 - 28	40 - 50	4.0 - 5.0	28 - 35	6
19 - 22	33 - 39	3.3 - 3.9	23 - 27	5 **1)**
15 - 18	26 - 32	2.6 - 3.2	18 - 22	4
11 - 14	19 - 25	1.9 - 2.5	13 - 17	3
4 - 10	7 - 18	0.7 - 1.8	5 - 12	2
<4	<7	<0.7	< 5	1 **2)**

1) Factory setting.

2) Do not use salt at this level.

Regardless of the type of detergent used, set the proper water hardness level to keep the salt refill indicator active.

Multi-tabs containing salt are not effective enough to soften hard water.

7.2 The rinse aid empty notification

The rinse aid helps to dry the dishes without streaks and stains. It is automatically released during the hot rinse phase.

When the rinse aid chamber is empty, the rinse aid indicator is turned on notifying to refill rinse aid. If the drying

results are satisfactory while using multi-tablets only, it is possible to deactivate the notification for refilling rinse aid. However, for best drying performance, always use rinse aid.

If standard detergent or multi-tablets without rinse aid are used, activate the notification to keep the rinse aid refill indicator active.

7.3 End sound

You can activate an acoustic signal that sounds when the programme is completed.

Acoustic signals sound also when a malfunction of the appliance occurs. It is not possible to deactivate these signals.

7.4 AirDry

AirDry improves the drying results. The appliance door opens automatically during the drying phase and remains ajar.

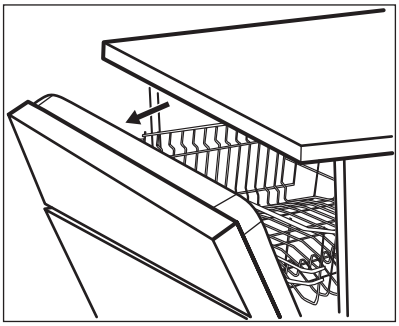

AirDry is automatically activated with all programmes.

CAUTION!
Do not try to close the appliance door within 2 minutes after automatic opening. This can cause damage to the appliance.

CAUTION!
If children have access to the appliance, we advise to deactivate AirDry. The automatic opening of the door may pose a danger.

When AirDry opens the door, Beam-on-Floor might not be completely visible. To see if the programme is complete, look at the control panel.

7.5 Key tones

The buttons on the control panel make a click sound when you press them. You can deactivate this sound.

7.6 Latest programme selection

You can set the automatic selection of the most recently used programme and options.

The latest programme that was completed before the appliance deactivation is saved. It is then selected automatically after you activate the appliance.

When the latest programme selection is disabled, the default programme is ECO.

7.7 Setting mode

How to navigate in setting mode

You can navigate in setting mode using MY TIME selection bar.

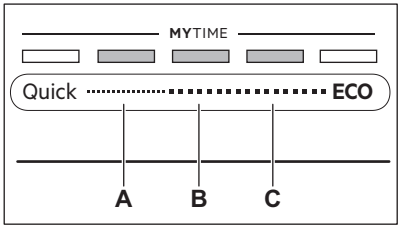

A. **Previous** button
B. **OK** button
C. **Next** button

Use **Previous** and **Next** to switch between the basic settings and to change their value.

Use **OK** to enter the selected setting and to confirm changing its value.

How to enter setting mode

You can enter setting mode before starting a programme. You cannot enter setting mode while the programme is running.

To enter setting mode, press and hold simultaneously Quick and **ECO** for about 3 seconds.
The lights related to the **Previous**, **OK** and **Next** are on.

How to change a setting

Make sure the appliance is in setting mode.

1. Use **Previous** or **Next** to select the bar of the ECOMETER dedicated to the desired setting.
   - The bar of the ECOMETER dedicated to the chosen setting flashes.
   - The display shows the current setting value.
2. Press **OK** to enter the setting.
   - The bar of the ECOMETER dedicated to the chosen setting is on. The other bars are off.
   - The current setting value flashes.
3. Press **Previous** or **Next** to change the value.
4. Press **OK** to confirm the setting.
   - The new setting is saved.
   - The appliance returns to the basic settings list.
5. Press and hold simultaneously Quick and **ECO** for about 3 seconds to exit setting mode.

The appliance returns to the programme selection.
The saved settings remain valid until you change them again.

8. DAILY USE

1. Open the water tap.
2. Press and hold ⏻ until the appliance is activated.
3. Fill the salt container if it is empty.
4. Fill the rinse aid dispenser if it is empty.
5. Load the baskets.
6. Add the detergent.
7. Select and start a programme.
8. Close the water tap when the programme is complete.

8.1 Using the detergent

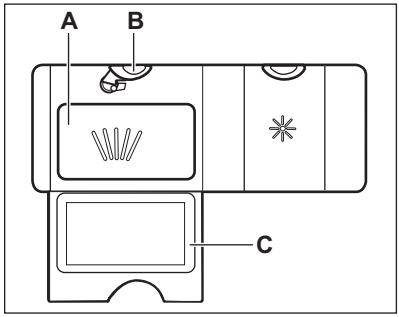

1. Press the release button (**B**) to open the lid (**C**).
2. Put the detergent, in powder or tablets, in the compartment (**A**).
3. If the programme has a prewash phase, put a small quantity of detergent on the inner part of the appliance door.
4. Close the lid. Make sure that the release button locks into position.

8.2 How to select and start a programme using MY TIME selection bar

1. Slide your finger across MY TIME selection bar to choose a suitable programme.
   - The light related to the selected programme is on.
   - The ECOMETER indicates the level of energy and water consumption.
   - The display shows the programme duration.
2. Activate applicable EXTRAS if desired.
3. Close the appliance door to start the programme.

8.3 How to activate EXTRAS

1. Select a programme using MY TIME selection bar.
2. Press the button dedicated to the option you want to activate.
   - The light related to the button is on.
   - The display shows the updated programme duration.
   - The ECOMETER indicates the updated level of energy and water consumption.

By default, options must be activated every time before you start a programme. If the latest programme selection is enabled, the saved options are activated automatically along with the programme.

It is not possible to activate or deactivate options while a programme is running.

Not all options are compatible with each other.

Activating options often increases the water and energy consumption as well as the programme duration.

8.4 How to start the AUTO Sense program

1. Press AUTO Sense.
   - The light related to the button is on.
   - The display shows the longest possible program duration.

MY TIME and EXTRAS are not applicable to this program.

2. Close the appliance door to start the program.

The appliance senses the type of load and adjusts a suitable wash cycle. During the cycle, the sensors operate several times and the initial program duration can decrease.

8.5 How to delay the start of a programme

1. Select a programme.
2. Press 3h repeatedly until the display shows the desired delay time (from 1 to 24 hours).

The light related to the button is on.

3. Close the appliance door to start the countdown.

During the countdown, it is not possible to change the delay time and the programme selection.

When the countdown is complete, the programme starts.

8.6 How to cancel the delay start while the countdown operates

Press and hold ⏻ for about 3 seconds. The appliance returns to the programme selection.

If you cancel the delay start, you have to select the programme again.

8.7 How to cancel a running programme

Press and hold ⏻ for about 3 seconds.

The appliance returns to the programme selection.

Make sure that there is detergent in the detergent dispenser before you start a new programme.

8.8 Opening the door while the appliance operates

Opening the door while a programme is running stops the appliance. It may affect the energy consumption and the programme duration. After closing the door, the appliance continues from the point of interruption.

If the door is opened for more than 30 seconds during the drying phase, the running programme ends. It does not happen if the door is opened by AirDry function.

8.9 The Auto Off function

This function saves energy by switching the appliance off when it is not operating.

The function comes into operation automatically:

- When the programme is completed.
- After 5 minutes if a programme was not started.

8.10 End of the programme

When the programme is complete, the display shows 0:00.

The Auto Off function switches the appliance off automatically.

All buttons are inactive except for the on/off button.

9. HINTS AND TIPS

9.1 General

Follow the hints below to ensure optimal cleaning and drying results in daily use and to help you protect the environment.

- Remove larger residues of food from the dishes into the waste bin.
- Do not pre-rinse dishes by hand. When needed, select a programme with a prewash phase.
- Always use the whole space of the baskets.
- Make sure that items in the baskets do not touch or cover each other. Only then can the water completely reach and wash the dishes.
- You can use dishwasher detergent, rinse aid and salt separately or you can use the multi-tablets (e.g. ''All in 1''). Follow the instructions on the packaging.
- Select a programme according to the type of load and the degree of soil. ECO offers the most efficient use of water and energy consumption.

9.2 Using salt, rinse aid and detergent

- Only use salt, rinse aid and detergent designed for dishwasher. Other products can cause damage to the appliance.
- In areas with hard and very hard water, we recommend to use basic dishwasher detergent (powder, gel, tablets containing no additional agents), rinse aid and salt separately for optimal cleaning and drying results.
- Detergent tablets do not fully dissolve with short programmes. To prevent detergent residues on the tableware, we recommend that you use tablets with long programmes.
- Do not use more than the correct quantity of detergent. Refer to the instructions on the detergent packaging.

9.3 What to do if you want to stop using multi-tablets

Before you start using separately detergent, salt and rinse aid, complete the following steps:

1. Set the highest level of the water softener.
2. Make sure that the salt and rinse aid containers are full.
3. Start the Quick programme. Do not add detergent and do not put dishes in the baskets.
4. When the programme is completed, adjust the water softener according to the water hardness in your area.
5. Adjust the released quantity of rinse aid.

9.4 Before starting a programme

Before you start the selected programme, make sure that:

- The filters are clean and correctly installed.
- The cap of the salt container is tight.
- The spray arms are not clogged.
- There is enough salt and rinse aid (unless you use multi-tablets).
- The arrangement of the items in the baskets is correct.
- The programme is suitable to the type of load and the degree of soil.
- The correct quantity of detergent is used.

9.5 Loading the baskets

- Use the appliance to wash dishwasher-safe items only.
- Do not wash in the appliance items made of wood, horn, aluminium, pewter and copper.
- Do not wash in the appliance items that can absorb water (sponges, household cloths).
- Remove large food residues from dishes.
- Soak cookware with burnt-on food before washing it in the appliance.
- Put hollow items (cups, glasses and pans) with the opening facing downwards.
- Make sure that glasses do not touch each other.
- Put light items in the upper basket. Make sure that the items do not move freely.
- Put cutlery and small items in the cutlery drawer.
- Make sure that the spray arms can move freely before you start a programme.

9.6 Unloading the baskets

1. Let the tableware cool down before you remove it from the appliance. Hot items can be easily damaged.
2. First remove items from the lower basket, then from the upper basket.

After the programme is completed, water can still remain on the inside surfaces of the appliance.

10. CARE AND CLEANING

WARNING!
Before any maintenance other than running the programme Machine Care, deactivate the appliance and disconnect the mains plug from the main socket.

Dirty filters and clogged spray arms negatively affect the washing results. Check these elements regularly and, if necessary, clean them.

10.1 Machine Care

Machine Care is a programme designed to clean the appliance interior with optimal results. It removes limescale and grease buildup.

When the appliance senses the need for cleaning, the indicator is on. Start the Machine Care programme to clean the appliance interior.

How to start the Machine Care programme

Before starting the Machine Care programme, clean the filters and spray arms.

1. Use a descaler or a cleaning product designed specifically for dishwashers. Follow the instructions on the packaging. Do not put dishes in the baskets.
2. Press and hold simultaneously and AUTO Sense for about 3 seconds.

The indicators and flash. The display shows the programme duration.

3. Close the appliance door to start the programme.

When the programme is complete, the indicator is off.

10.2 Internal cleaning

- Carefully clean the appliance, including the rubber gasket of the door, with a soft damp cloth.
- Do not use abrasive products, abrasive cleaning pads, sharp tools, strong chemicals, scourer or solvents.
- To maintain the performance of your appliance, use a cleaning product designed specifically for dishwashers at least once every two months. Carefully follow the instructions on the packaging of the product.
- For optimal cleaning results, start the Machine Care programme.

10.3 External cleaning

- Clean the appliance with a moist soft cloth.
- Only use neutral detergents.
- Do not use abrasive products, abrasive cleaning pads or solvents.

10.4 Cleaning the filters

The filter system is made of 3 parts.

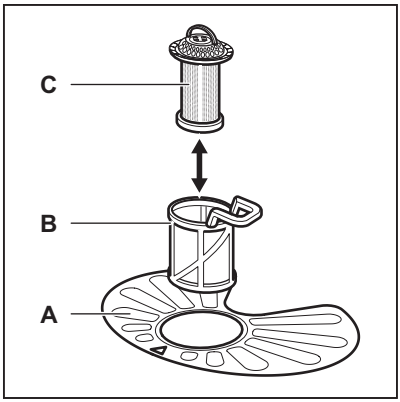

1. Turn the filter (**B**) counterclockwise and remove it.

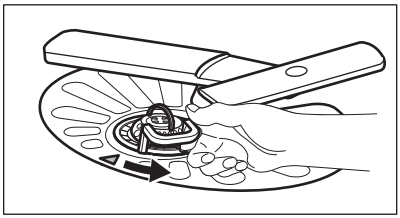

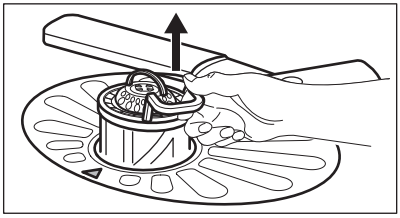

2. Remove the filter (**C**) out of filter (**B**).
3. Remove the flat filter (**A**).

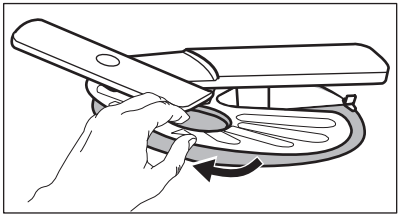

4. Wash the filters.

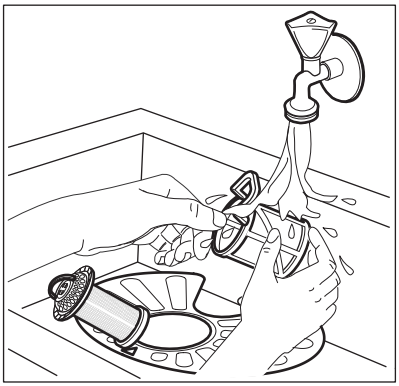

5. Make sure that there are no residues of food or soil in or around the edge of the sump.
6. Put back in place the flat filter (**A**). Make sure that it is correctly positioned under the 2 guides.

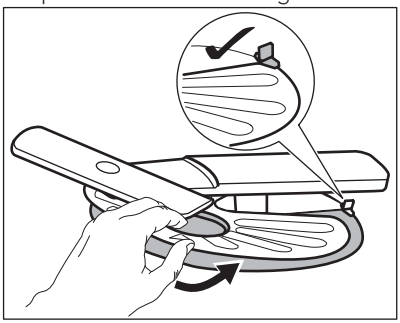

7. Reassemble the filters (**B**) and (**C**).
8. Put back the filter (**B**) in the flat filter (**A**). Turn it clockwise until it locks.

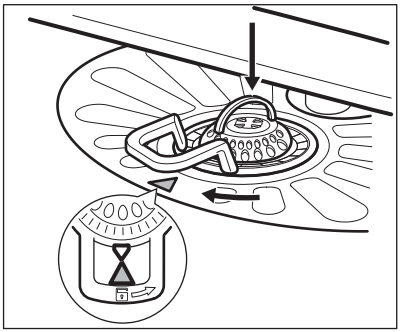

CAUTION!
An incorrect position of the filters can cause bad washing results and damage to the appliance.

10.5 Cleaning the lower spray arm

We recommend to clean the lower spray arm regularly to prevent soil from clogging the holes.

Clogged holes can cause unsatisfactory washing results.

1. To remove the lower spray arm, pull it upwards.

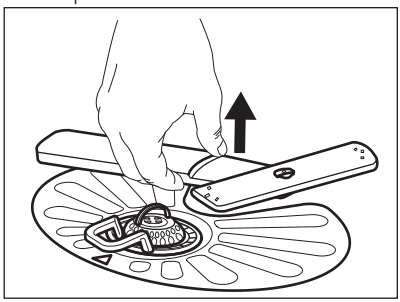

2. Wash the spray arm under running water. Use a thin pointed tool, e.g. a toothpick, to remove particles of soil from the holes.

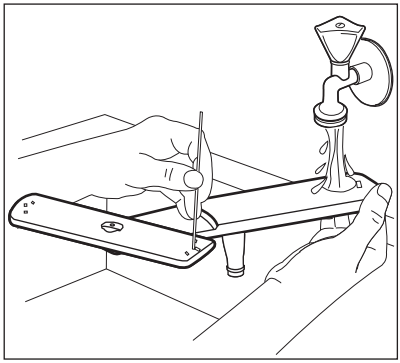

3. To install the spray arm back, press it downwards.

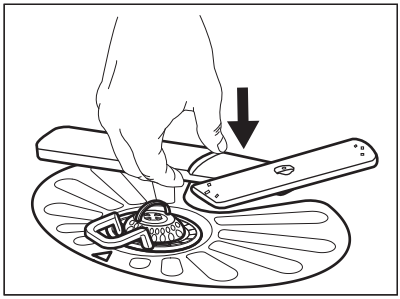

10.6 Cleaning the ceiling spray arm

We recommend to clean the ceiling spray arm regularly to prevent soil from clogging the holes. Clogged holes can cause unsatisfactory washing results.

The ceiling spray arm is placed on the ceiling of the appliance. The spray arm (**C**) is installed in the delivery tube (**A**) with the mounting element (**B**).

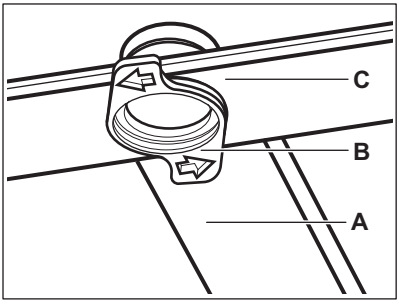

1. Release the stoppers on the sides of the sliding rails of the cutlery drawer and pull the drawer out.

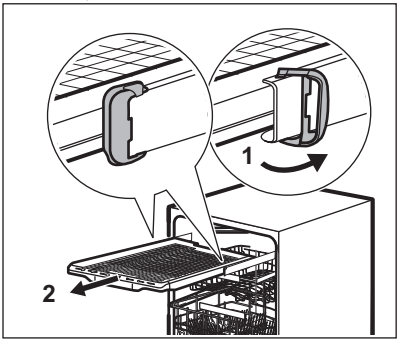

2. Move the upper basket to the lowest level to reach the spray arm more easily.
3. To detach the spray arm (**C**) from the delivery tube (**A**), turn the mounting element (**B**) counterclockwise and pull the spray arm downwards.
4. Wash the spray arm under running water. Use a thin pointed tool, e.g. a toothpick, to remove particles of soil from the holes. Run the water through the holes to wash soil particles away from the inside.

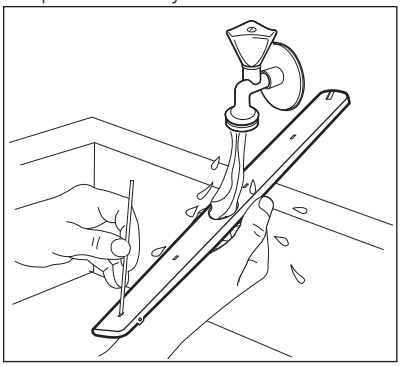

5. To install the spray arm (**C**) back, insert the mounting element (**B**) in the spray arm and fix it in the delivery tube (**A**) by turning it clockwise. Make sure that the mounting element locks into place.
6. Install the cutlery drawer on the sliding rails and block the stoppers.

11. TROUBLESHOOTING

WARNING!
Improper repair of the appliance may pose a danger to the safety of the user. Any repairs must be performed by qualified personnel.

The majority of problems that may occur can be solved without the need to contact an Authorised Service Centre.

Refer to the below table for information on possible problems.

With some problems, the display shows an alarm code.

Problem and alarm code	Possible cause and solution
You cannot activate the appliance.	• Make sure that the mains plug is connected to the mains socket. • Make sure that there is no damaged fuse in the fuse box.
The programme does not start.	• Make sure that the appliance door is closed. • If the delay start is set, cancel the setting or wait for the end of the countdown. • The appliance recharges the resin inside the water softener. The duration of the procedure is approximately 5 minutes.
The appliance does not fill with water. The display shows F10 or F11.	• Make sure that the water tap is open. • Make sure that the pressure of the water supply is not too low. For this information, contact your local water authority. • Make sure that the water tap is not clogged. • Make sure that the filter in the inlet hose is not clogged. • Make sure that the inlet hose has no kinks or bends.
The appliance does not drain the water. The display shows F20.	• Make sure that the sink spigot is not clogged. • Make sure that the filter in the outlet hose is not clogged. • Make sure that the interior filter system is not clogged. • Make sure that the drain hose has no kinks or bends.
The anti-flood device is on. The display shows F30.	• Close the water tap and contact an Authorised Service Centre.
The appliance stops and starts more times during operation.	• It is normal. It provides optimal cleaning results and energy savings.
The programme lasts too long.	• If the delay start option is set, cancel the delay setting or wait for the end of the countdown. • Activating options can increase the programme duration.
The remaining time in the display increases and skips nearly to the end of the programme duration.	• This is not a defect. The appliance is working correctly.
Small leak from the appliance door.	• The appliance is not levelled. Loosen or tighten the adjustable feet (if applicable). • The appliance door is not centred on the tub. Adjust the rear foot (if applicable).
The appliance door is difficult to close.	• The appliance is not levelled. Loosen or tighten the adjustable feet (if applicable). • Parts of the tableware are protruding from the baskets.

Problem and alarm code	Possible cause and solution
Rattling or knocking sounds from the inside of the appliance.	• The tableware is not properly arranged in the baskets. Refer to basket loading leaflet. • Make sure that the spray arms can rotate freely.
The appliance trips the circuit-beaker.	• The amperage is insufficient to supply simultaneously all the appliances in use. Check the socket amperage and the capacity of the meter or turn off one of the appliances in use. • Internal electrical fault of the appliance. Contact an Authorised Service Centre.

Once you have checked the appliance, deactivate and activate the appliance. If the problem occurs again, contact an Authorised Service Centre.

For alarm codes not described in the table, contact an Authorised Service Centre.

11.1 The washing and drying results are not satisfactory

Problem	Possible cause and solution
Poor washing results.	• Refer to **"Daily use"**, **"Hints and tips"** and the basket loading leaflet. • Use more intensive washing programme. • Activate the ExtraPower option to improve the washing results of a selected programme. • Clean spray arm jets and filter. Refer to **"Care and Cleaning"**.
Poor drying results.	• Tableware was left for too long inside the closed appliance. Activate AirDry to set the automatic opening of the door and to improve the drying performance. • There is no rinse aid or the dosage of rinse aid is not sufficient. Fill the rinse aid dispenser or set the level of rinse aid to a higher level. • The quality of the rinse aid can be the cause. • We recommend to use rinse aid always, even in combination with multi-tablets. • Plastic items may need to be towel dried. • The programme does not have the drying phase. Refer to **"Programmes overview"**.
There are whitish streaks or bluish layers on glasses and dishes.	• The released quantity of rinse aid is too high. Adjust the rinse aid level to a lower level. • The quantity of detergent is too high.
There are stains and dry water drops on glasses and dishes.	• The released quantity of rinse aid is not sufficient. Adjust the rinse aid level to a higher level. • The quality of the rinse aid can be the cause.
The interior of the appliance is wet.	• This is not a defect of the appliance. Humid air condensates on the appliance walls.

Problem	Possible cause and solution
Unusual foam during washing.	• Use the detergent designed specifically for dishwashers. • There is a leak in the rinse aid dispenser. Contact an Authorised Service Centre.
Traces of rust on cutlery.	• There is too much salt in the water used for washing. Refer to **"The water softener"**. • Silver and stainless steel cutlery were placed together. Do not put silver and stainless steel items close together.
There are residues of detergent in the dispenser at the end of the programme.	• The detergent tablet was stuck in the dispenser and therefore was not completely washed away by water. • Water cannot wash away the detergent from the dispenser. Make sure that the spray arms are not blocked or clogged. • Make sure that items in the baskets do not impede the lid of the detergent dispenser from opening.
Odours inside the appliance.	• Refer to **"Internal cleaning"**. • Start the Machine Care programme with a descaler or a cleaning product designed for dishwashers.
Limescale deposits on the tableware, on the tub and on the inside of the door.	• The level of salt is low, check the refill indicator. • The cap of the salt container is loose. • Your tap water is hard. Refer to **"The water softener"**. • Use salt and set regeneration of the water softener even when multi-functional tablets are used. Refer to **"The water softener"**. • Start the Machine Care programme with a descaler designed for dishwashers. • If limescale deposits still remain, clean the appliance with appliance cleaners which are particularly suitable for this purpose. • Try a different detergent. • Contact the detergent manufacturer.
Dull, discoloured or chipped tableware.	• Make sure that only dishwasher-safe items are washed in the appliance. • Load and unload the basket carefully. Refer to the basket loading leaflet. • Place delicate items in the upper basket. • Activate the GlassCare option to ensure special care for glassware and delicate items.

Refer to **"Before first use"**, **"Daily use"**, or **"Hints and tips"** for other possible causes.

12. PRODUCT INFORMATION SHEET

Trade Mark	AEG
Model	FSS53907Z 911536419
Rated capacity (standard place settings)	14
Energy efficiency class	A+++
Energy consumption in kWh per year, based on 280 standard cleaning cycles using cold water fill and the consumption of the low power modes. The actual energy consumption will depend on how the appliance is used.	237
Energy consumption of standard cleaning cycle (kWh)	0.832
Power consumption in off mode (W)	0.50
Power consumption in left-on mode (W)	5.0
Water consumption in litres per year, based on 280 standard cleaning cycles. The actual water consumption will depend on how the appliance is used	2940
Drying efficiency class on a scale from G (least efficient) to A (most efficient)	A
The 'standard programme' is the standard cleaning cycle to which the information in the label and the fiche relates. This programme is suitable to clean normally soiled tableware and is the most efficient programme in terms of combined energy and water consumption. It is indicated as "Eco" programme.	ECO
Programme time of standard cleaning cycle (min)	240
Duration of the left-on mode (min)	1
Sound power level (db(A) re 1pW)	44
Built in appliance Y/N	Yes

13. ADDITIONAL TECHNICAL INFORMATION

Dimensions	Width / height / depth (mm)	596 / 818 - 898 / 550
Electrical connection [1)]	Voltage (V)	220 - 240
	Frequency (Hz)	50
Water supply pressure	Min. / max. bar (MPa)	0.5 (0.05) / 8 (0.8)

Water supply	Cold water or hot water [2]	max 60 °C

[1] Refer to the rating plate for other values.

[2] If the hot water comes from alternative source of energy (e.g. solar panels), use the hot water supply to decrease energy consumption.

14. ENVIRONMENTAL CONCERNS

Recycle materials with the symbol ♺. Put the packaging in relevant containers to recycle it. Help protect the environment and human health by recycling waste of electrical and electronic appliances. Do not dispose of appliances marked with the symbol with the household waste. Return the product to your local recycling facility or contact your municipal office.

www.aeg.com/shop



156933090-A-232019

CE

AEG