L7FEC146R

EN **User Manual**
Washing Machine

USER MANUAL

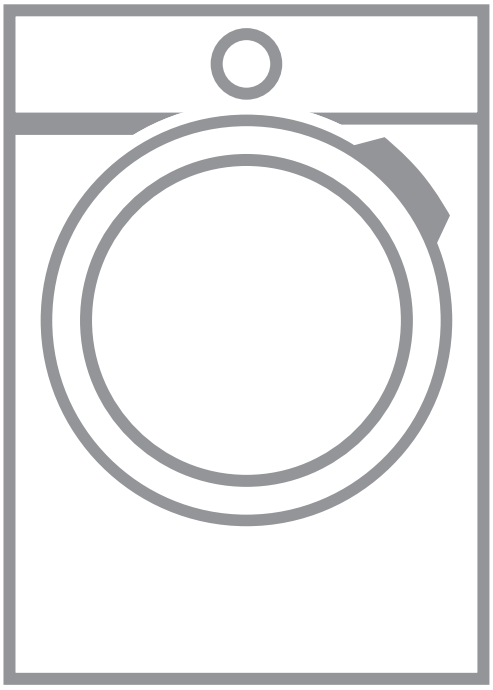

AEG

CONTENTS

1. SAFETY INFORMATION....3
2. SAFETY INSTRUCTIONS....4
3. PRODUCT DESCRIPTION....6
4. TECHNICAL DATA....7
5. INSTALLATION....8
6. CONTROL PANEL....13
7. DIAL AND BUTTONS....15
8. PROGRAMMES....17
9. BEFORE FIRST USE....23
10. SETTINGS....23
11. DAILY USE....24
12. HINTS AND TIPS....29
13. CARE AND CLEANING....30
14. TROUBLESHOOTING....35
15. CONSUMPTION VALUES....41
16. ACCESSORIES....43

FOR PERFECT RESULTS

Thank you for choosing this AEG product. We have created it to give you impeccable performance for many years, with innovative technologies that help make life simpler – features you might not find on ordinary appliances. Please spend a few minutes reading to get the very best from it.
Visit our website to:



Get usage advice, brochures, trouble shooter, service and repair information:
www.aeg.com/support



Register your product for better service:
www.registeraeg.com



Buy Accessories, Consumables and Original spare parts for your appliance:
www.aeg.com/shop

CUSTOMER CARE AND SERVICE

Always use original spare parts.
When contacting our Authorised Service Centre, ensure that you have the following data available: Model, PNC, Serial Number.
The information can be found on the rating plate.

⚠ Warning / Caution-Safety information

ⓘ General information and tips

Environmental information

Subject to change without notice.

1. ⚠ SAFETY INFORMATION

Before the installation and use of the appliance, carefully read the supplied instructions. The manufacturer is not responsible for any injuries or damage that are the result of incorrect installation or usage. Always keep the instructions in a safe and accessible location for future reference.

1.1 Children and vulnerable people safety

- This appliance can be used by children aged from 8 years and above and persons with reduced physical, sensory or mental capabilities or lack of experience and knowledge if they have been given supervision or instruction concerning the use of the appliance in a safe way and understand the hazards involved.
- Children between 3 and 8 years of age and persons with very extensive and complex disabilities shall be kept away from the appliance unless continuously supervised.
- Children of less than 3 years of age should be kept away from the appliance unless continuously supervised.
- Do not let children play with the appliance.
- Keep all packaging away from children and dispose of it appropriately.
- Keep detergents away from children.
- Keep children and pets away from the appliance when the door is open.
- If the appliance has a child safety device, it should be activated.
- Children shall not carry out cleaning and user maintenance of the appliance without supervision.

1.2 General Safety

- Do not change the specification of this appliance.
- This appliance is intended to be used in household and similar applications such as:

  - staff kitchen areas in shops, offices and other working environments;
  - by clients in hotels, motels, bed & breakfast and other residential type environments;
  - areas for communal use in blocks of flats or in launderettes.
- Do not exceed the maximum load of 10 kg (refer to the "Programme chart" chapter).
- The operating water pressure at the water entry point from the outlet connection must be between 0.5 bar (0.05 MPa) and 8 bar (0.8 MPa).
- The ventilation opening in the base must not be covered by a carpet, mat, or any floor covering.
- The appliance must be connected to the water mains using the new supplied hose sets, or other new hose sets supplied by the Authorised Service Centre.
- Old hose sets must not be reused.
- If the mains power supply cable is damaged, it must be replaced by the manufacturer, its Authorised Service Centre or similarly qualified persons to avoid an electrical hazard.
- Before any maintenance operation, deactivate the appliance and disconnect the mains plug from the socket.
- Do not use high pressure water sprays and/or steam to clean the appliance.
- Clean the appliance with a moist cloth. Use only neutral detergents. Do not use abrasive products, abrasive cleaning pads, solvents or metal objects.

2. SAFETY INSTRUCTIONS

2.1 Installation

The installation must comply with relevant national regulations.

- Remove all the packaging and the transit bolts including rubber bush with plastic spacer.
- Keep the transit bolts in a safe place. If the appliance is to be moved in the future they must be reattached to lock the drum to prevent an internal damage.
- Always take care when moving the appliance as it is heavy. Always use safety gloves and enclosed footwear.
- Follow the installation instructions supplied with the appliance.

- Do not install or use a damaged appliance.
- Do not install or use the appliance where the temperature can be less than 0°C or where it is exposed to the weather.
- The floor area on which the appliance is to be installed must be flat, stable, heat resistant and clean.
- Make sure that there is air circulation between the appliance and the floor.
- When the appliance is in its permanent position, check if it is levelled correctly with the aid of a spirit level. If it is not, adjust the feet accordingly.
- Do not install the appliance directly above a floor drain.
- Do not spray water on the appliance and do not expose it to excessive humidity.
- Do not install the appliance where the appliance door cannot be fully opened.
- Do not put a closed container to collect possible water leakage under the appliance. Contact the Authorised Service Centre to ensure which accessories can be used.

2.2 Electrical connection

WARNING!
Risk of fire and electric shock.

- The appliance must be earthed.
- Always use a correctly installed shockproof socket.
- Make sure that the parameters on the rating plate are compatible with the electrical ratings of the mains power supply.
- Do not use multi-plug adapters and extension cables.
- Make sure not to cause damage to the mains plug and to the mains cable. Should the mains cable need to be replaced, this must be carried out by our Authorised Service Centre.
- Connect the mains plug to the mains socket only at the end of the installation. Make sure that there is access to the mains plug after the installation.
- Do not touch the mains cable or the mains plug with wet hands.
- Do not pull the mains cable to disconnect the appliance. Always pull the mains plug.
- This appliance is fitted with a 13 A mains plug. If it is necessary to change the mains plug fuse, use only a 13 A ASTA (BS 1362) fuse (UK and Ireland only).

2.3 Water connection

- Do not cause damage to the water hoses.
- Before connection to new pipes, pipes not used for a long time, where repair work has been carried out or new devices fitted (water meters, etc.), let the water flow until it is clean and clear.
- Ensure that there are no visible water leaks during and after the first use of the appliance.
- Do not use an extension hose if the inlet hose is too short. Contact the Authorised Service Centre for the replacement of the inlet hose.
- When unpacking the appliance, It is possible to see water flowing from the drain hose. This is due to the testing of the appliance with the use of water in the factory.
- You can extend the drain hose to maximum 400 cm. Contact the Authorised Service Centre for the other drain hose and the extension.
- Make sure that there is access to the tap after the installation.

2.4 Use

WARNING!
Risk of injury, electric shock, fire, burns or damage to the appliance.

- Follow the safety instructions on the detergent packaging.
- Do not put flammable products or items that are wet with flammable products in, near or on the appliance.
- Do not wash fabrics which are heavily soiled with oil, grease or other greasy substances. It can damage rubber parts of the washing machine. Prewash such fabrics by hand before

loading them into the washing machine.
- Do not touch the glass door while a programme operates. The glass can get hot.
- Make sure that all metal objects are removed from the laundry.

2.5 Service

- To repair the appliance contact the Authorised Service Centre. Use original spare parts only.
- Please note that self-repair or non-professional repair can have safety consequences and might void the guarantee.
- The following spare parts will be available for 10 years after the model has been discontinued: motor and motor brushes, transmission between motor and drum, pumps, shock absorbers and springs, washing drum, drum spider and related ball bearings, heaters and heating elements, including heat pumps, piping and related equipment including hoses, valves, filters and aquastops, printed circuit boards, electronic displays, pressure switches, thermostats and sensors, software and firmware including reset software, door, door hinge and seals, other seals, door locking assembly, plastic peripherals such as detergent dispensers. Please note that some of these spare parts are only available to professional repairers, and that not all spare parts are relevant for all models.

2.6 Disposal

WARNING!
Risk of injury or suffocation.

- Disconnect the appliance from the mains electrical and water supplies.
- Cut off the mains electrical cable close to the appliance and dispose of it.
- Remove the door catch to prevent children or pets from becoming trapped in the drum.
- Dispose of the appliance in accordance with local requirements for the disposal of Waste Electrical and Electronic Equipment (WEEE).

3. PRODUCT DESCRIPTION

3.1 Special features

Your new washing machine meets all modern requirements for an effective treatment of laundry with low water, energy and detergent consumption and proper care of fabric.

- The **ProSense technology** detects the laundry load size defining the programme duration in 30 seconds. The washing programme is tailored to the laundry load and the type of fabric without consuming more time, energy and water than necessary.
- The steam has a quick and easy way to refresh the clothes. The gentle steam programmes remove odours and reduce creases in dry fabrics so they need little ironing.
  The **Plus Steam option**, finishes every cycle with gentle steam that relaxes the fibres and reduces fabric creasing. Ironing will be easier!
- Thanks to the **Soft Plus option**, the fabric softener is uniformly spread out in the laundry and deeply penetrates the fabric fibres favouring a perfect softness.

3.2 Appliance overview

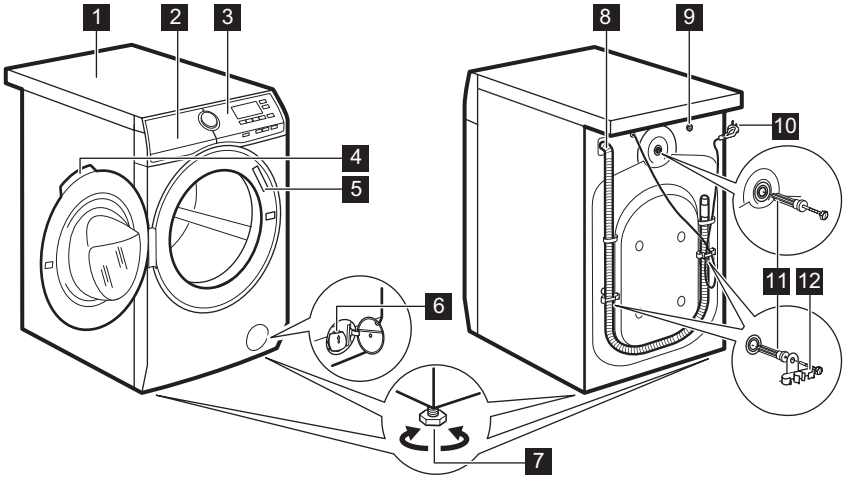

1 Worktop
2 Detergent dispenser
3 Control panel
4 Door handle
5 Rating plate
6 Drain pump filter
7 Feet for levelling the appliance
8 Drain hose
9 Inlet hose connection
10 Mains cable
11 Transit bolts
12 Hose support

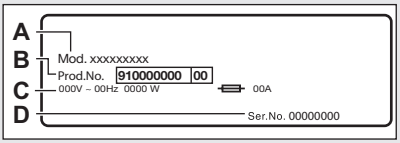

The rating plate reports the model name (**A**), product number (**B**), electrical ratings (**C**) and serial number (**D**).

4. TECHNICAL DATA

Dimension	Width/ Height/ Total depth	59.7 cm /84.7 cm /66.0 cm
Electrical connection	Voltage	230-240 V
	Overall power	2200 W
	Fuse	13 A
	Frequency	50 Hz

Level of protection against ingress of solid particles and moisture ensured by the protective cover, except where the low voltage equipment has no protection against moisture		IPX4
Water supply pressure **1)**	Minimum Maximum	0.5 bar (0.05 MPa) 8 bar (0.8 MPa)
Water supply **2)**		Cold water
Maximum Load	Cotton	10 kg
Spin Speed	Maximum spin speed	1351 rpm

1) The appliance works correctly if the water pressure is not lower than 0.05 MPa (0.5 bar). If you cannot connect the water inlet hose to the cold water tap of the primary hydraulic system, connect it to your domestic cold water storage system. Make sure not to exceed a distance of 5.02 m (16.5 ft) between the appliance inlet hose and the bottom of the water storage tank.

2) Connect the water inlet hose to a water tap with a 3/4'' thread.

5. INSTALLATION

WARNING!
Refer to Safety chapters.

5.1 Unpacking

WARNING!
Remove all the packaging and the transit bolts before installing the appliance.

WARNING!
Use the gloves.

1. Remove the external film. If necessary, use a cutter.

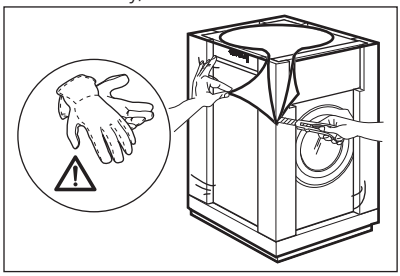

2. Remove the cardboard top and the polystyrene packaging materials.

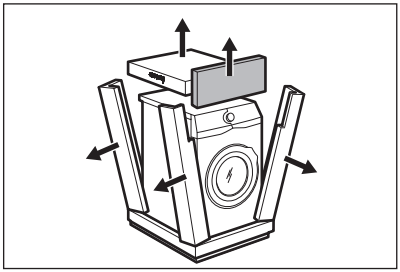

3. Remove the internal film.

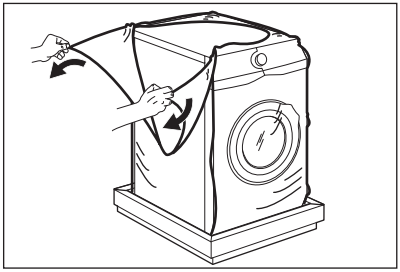

4. Open the door and remove the polystyrene piece from the door seal and all the items from the drum.

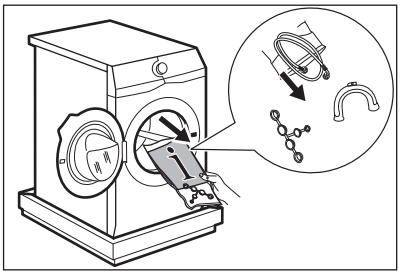

5. Carefully put the appliance down on its rear side.
6. Put the front polystyrene packaging element on the floor under the appliance.

Make sure not to damage the hoses.

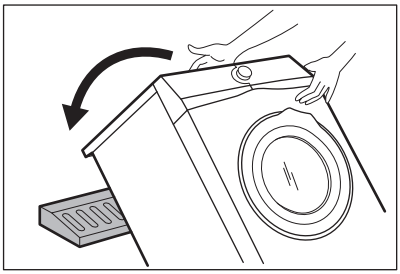

7. Remove the polystyrene protection from the bottom.

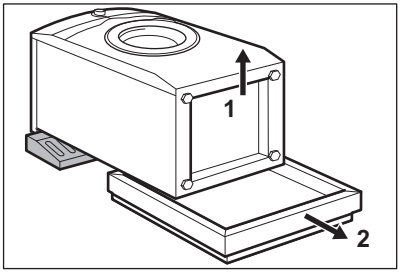

8. Pull up the appliance in vertical position.

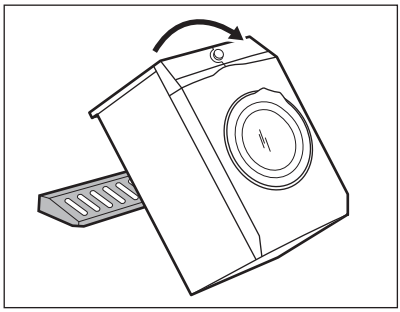

9. Remove the power supply cable and the drain hose from the hose holders.

It is possible to see water flowing from the drain hose. This is due to the testing with water of the appliance in factory.

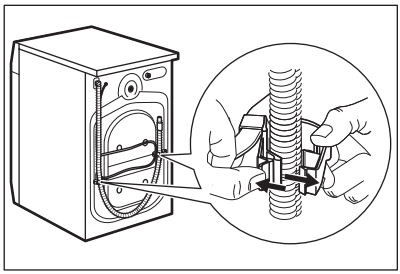

10. Remove the three bolts by using the spanner supplied with the appliance.

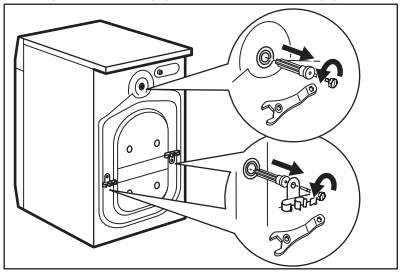

11. Pull out the plastic spacers.
12. Put the plastic caps, that you find in the user manual bag, in the holes.

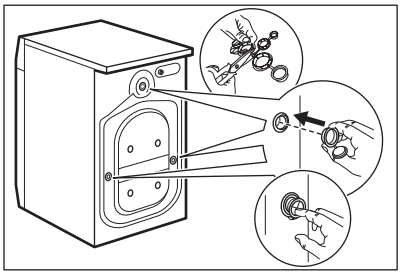

We recommend that you keep the packaging and the transit bolts for any movement of the appliance.

5.2 Installation on suspended flooring

Suspended wooden floors are particularly susceptible to vibration.

To limit vibration we recommend placing a waterproof wooden panel, at least 15 mm thick, under the appliance. It should be screwed to at least 2 floor beams and should extend beyond the front feet.

If possible, install the appliance where the floor is more stable.

5.3 Positioning and levelling

1. Install the appliance on a flat hard floor.

Make sure that carpets do not stop the air circulation below the appliance.
Make sure that the appliance does not touch the wall or other units.

2. Loosen or tighten the feet to adjust the level.

WARNING!
Do not put cardboard, wood or equivalent materials below the appliance feet to adjust the level.

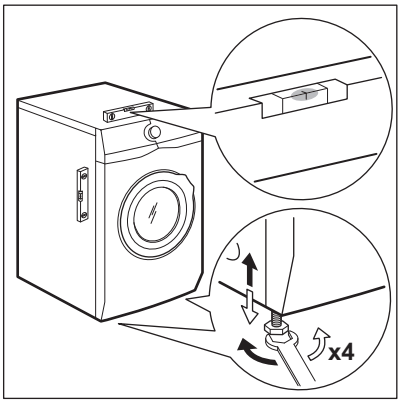

The appliance must be level and stable.

A correct adjustment of the appliance level prevents the vibration, noise and the movement of the appliance when in operation.

When the machine is installed on a plinth or if a washer dryer is stacked on the washing machine, use the accessories described in chapter 'Accessories'. Read carefully the instructions supplied with the appliance and with the accessory.

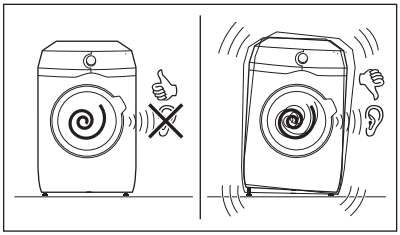

5.4 The inlet hose

1. Connect the water inlet hose to the back of the appliance.
2. Position it toward left or right depending on the position of the water tap.

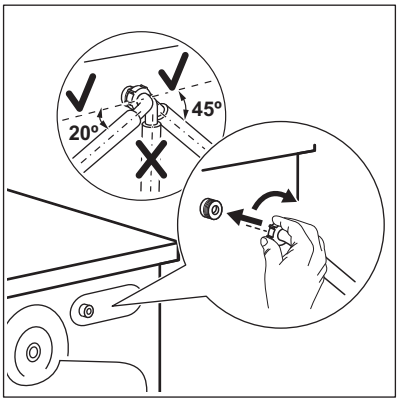

Make sure that the inlet hose is not in vertical position.

3. If necessary, loose the ring nut to set it in the correct position.
4. Connect the water inlet hose to the cold water tap with 3/4" thread.

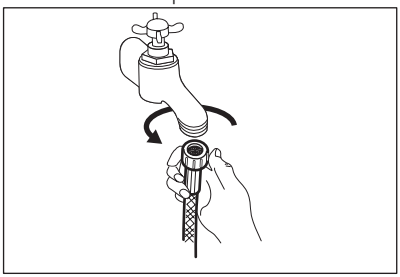

CAUTION!
Make sure that there are no leaks from the couplings.

Do not use an extension hose if the inlet hose is too short. Contact the service centre for the replacement of the inlet hose.

5.5 Water drainage

The drain hose should be positioned at a height of not less than 60 cm and not more than 100 cm from the floor.

You can extend the drain hose to maximum 400 cm. Contact the authorized service centre for the other drain hose and the extension.

It is possible to connect the drain hose in different ways:

1. Make a U shape with the drain hose and put it around the plastic hose guide.

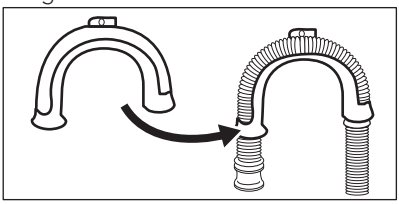

2. **On the edge of a sink** - Fasten the guide to the water tap or to the wall.

Make sure that the plastic guide cannot move when the appliance drains.

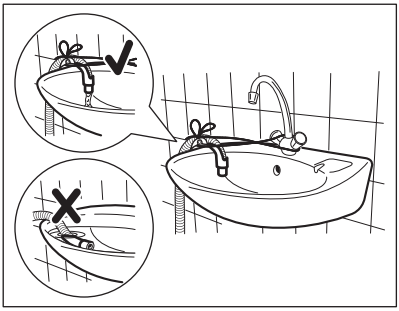

Make sure that the drain hose end is not immersed in the water. There may be a return of dirty water into the appliance.

3. **To a stand pipe with vent-hole** - Insert the drain hose directly into a drain pipe. Refer to the illustration.

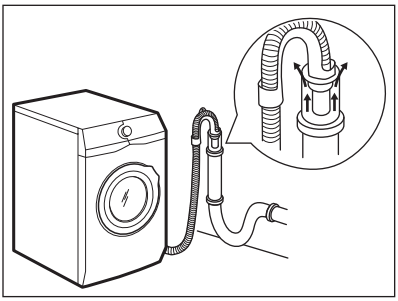

The end of the drain hose must always be ventilated , i.e. the inner diameter of the drain pipe (min. 38 mm - min. 1.5") must be larger than the external diameter of the drain hose.

4. If the end of the drain hose looks like this (see the picture), you can push it directly into the stand pipe.

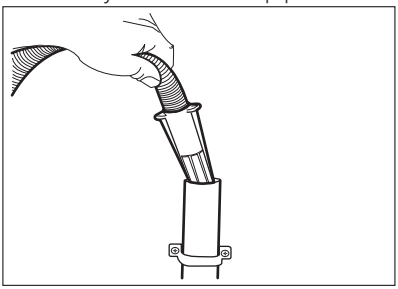

5. **Without the plastic hose guide, to a sink spigot** - Put the drain hose in the spigot and tighten it with a clamp. Refer to the illustration.

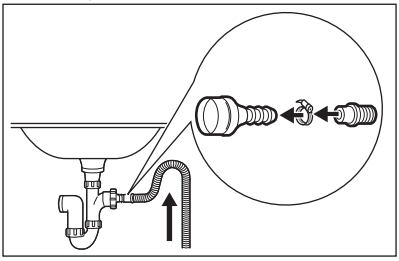

Make sure that the drain hose makes a loop to prevent particles going into the appliance from the sink.

6. Position the hose **directly to a built-in drain pipe in the room wall** and tighten it with a clamp.

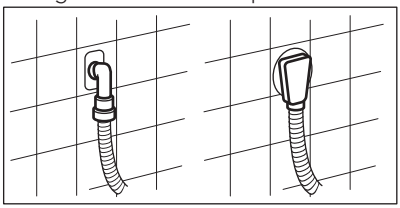

5.6 Electrical connection

At the end of installation you can connect the mains plug to the mains socket.

The rating plate on the inner edge of the appliance door and the 'Technical Data' chapter indicate the necessary electrical ratings. Make sure that they are compatible with the mains power supply.

Check that your domestic electrical installation can take the maximum load required, also taking into account any other appliances in use.

Connect the appliance to an earthed socket.

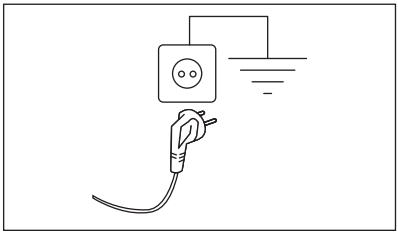

The power supply cable must be easily accessible after installing the appliance.

For any electrical work required to install this appliance, contact our Authorised Service Centre.

The manufacturer does not accept any responsibility for damage or injury through failure to comply with the above safety precaution.

6. CONTROL PANEL

6.1 Control panel description

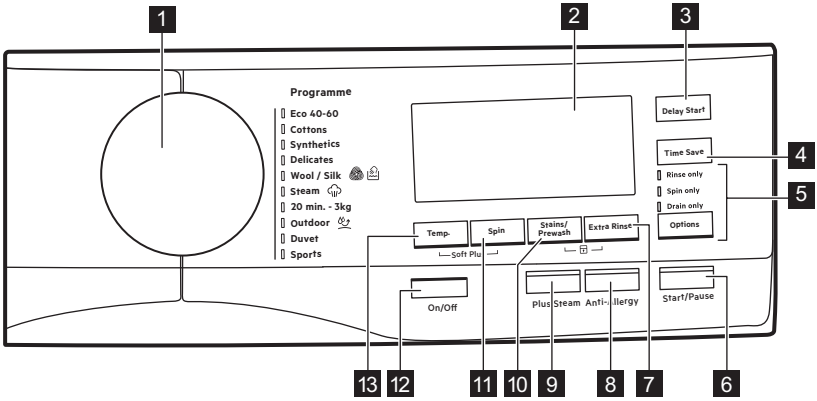

1 Programme dial
2 Display
3 Delay start touch button (Delay Start)
4 Time saving touch button (Time Save)
5 Skipping phase touch button (Options)
- Wash phase skipping (Rinse only)
- Wash and rinse phase skipping (Spin only)
- Only drain (Drain only)

6 Start/Pause touch button (Start/ Pause)
7 Extra rinse touch button (Extra Rinse)
8 Anti-Allergy touch button (Anti-Allergy)
9 Super steam touch button (Plus Steam)
10 Anti-stain and prewash touch button (Stains/Prewash)
11 Spin reduction touch button (Spin)
12 On/Off push button (On/Off)
13 Temperature touch button (Temp.)

6.2 Display

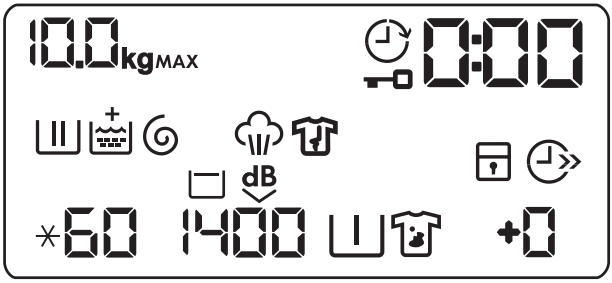

10.0kg	Maximum load indicator. The kg icon flashes during laundry load estimation (refer to "PROSENSE load detection" paragraph).
MAX	Maximum laundry indicator. It flashes when the laundry load exceeds the maximum declared load of the selected programme.
	Delay start indicator.
	Door locked indicator.
0:00	The digital indicator can show: • Programme duration (e. g. 2:40). • Delay time (e. g. 30' or 2h). • Cycle end (0). • Warning code (e.g. E20).
	Washing phase indicator: it flashes during prewash and wash phase.
	Rinsing phase indicator: it flashes during rinse phase.
	The + indicator appears when the Soft Plus option is activated.
	Spin and drain phase indicator. It flashes during spin and drain phase.
	Steam phase indicator.
	Anti-crease phase indicator.
	Child safety lock indicator.
	Time saving indicator.
60	Temperature indicator. The ✳ indicator appears when a cold wash is set.

1400	Spin speed indicator.
	Rinse hold indicator.
dB	Quiet indicator.
	Pre-wash indicator.
	Stain indicator.
+0	Extra rinse indicator.

7. DIAL AND BUTTONS

7.1 On/Off

Pressing this button for a few seconds allows to activate or deactivate the appliance. Two different tunes sound while switching the appliance on or off.

As the Stand-by function automatically deactivates the appliance to decrease the energy consumption in a few cases, you may need to activate the appliance again.

For more details, refer to Stand-by paragraph in Daily Use chapter.

7.2 Introduction

The options/functions are not selectable with all washing programmes. Check the compatibility between options/functions and washing programmes in the "Programme Chart". An option/function can exclude another one, in this case the appliance doesn't allow you to set the incompatible options/functions together. Make sure the screen and touch buttons are always clean and dry.

7.3 Temp.

When you select a washing programme, the appliance automatically proposes a default temperature.

Touch this button repeatedly until the desired temperature value appears on the display.

When the display shows the indicators ✳ and – –, the appliance does not heat the water.

7.4 Spin

When you set a programme, the appliance automatically selects the maximum spin speed.

Touch this button repeatedly to:

- **Decrease the spin speed.**

  The display shows only the spin speeds available for the set programme.

- **Activate the Rinse Hold option** . The water of the last rinse is not drained out to prevent the fabrics from creasing. The washing programme ends with water in the drum and the final spin phase is not performed.

  The display shows the indicator . The drum turns regularly to reduce creasing.
  The door stays locked. The drum turns regularly to reduce creasing. You must drain the water to unlock the door.
  Touch Start/Pause button: the appliance performs the spinning phase and drains the water.
- **Activate the Quiet option.**

All spinning phases (intermediate spin and final spin) are suppressed and the programme ends with water in the drum. This helps to reduce creasing. As the programme is very quiet, it is suitable for use at night time when cheaper electricity tariffs are available. In some programmes the rinses are performed with more water.

The display shows the indicator dB. The door stays locked. The drum turns regularly to reduce creasing. You must drain the water to unlock the door.
Touch the Start/Pause button: the appliance performs only the draining phase.

The appliance empties the water out automatically after approximately 18 hours.

7.5 Stains/Prewash

Press this button repeatedly to activate one of the two options or both.

The relevant indicator goes on in the display.

- **Stains**
  Select this option to add an anti-stain phase to a programme in order to treat heavily soiled or stained laundry with stain remover.
  Pour the stain remover into compartment . The stain remover will be added in the appropriate phase of the washing programme.

  This option can increase the programme duration.

  This option is not available with a temperature lower than 40 °C.

- **Prewash**
  Use this option to add a prewash phase at 30 °C before the washing phase.
  This option is recommended for heavily soiled laundry, especially if containing sand, dust , mud and other solid particles.

This option can increase the programme duration.

7.6 Extra Rinse

With this option you can add up to 3 rinses accordingly to the selected washing programmes.

Useful for people allergic to detergents and in areas where the water is soft.

The indicator shows the selected number of rinses.

This option increases the programme duration.

If the Extra Rinse is set as a default option and you select a compatible washing programme, the display shows . In this case, by pressing the Extra Rinse button , it is possible to add just one rinse.

7.7 Plus Steam

This option adds a steam phase followed by a short anti-crease phase at the end of the washing programme.

The steam phase reduces fabric creasing and facilitates the fabric ironing.

The indicator flashes on the display during steam phase.

This option can increase the programme duration.

When the programme stops the display shows a zero , the indicator is steady on and the indicator starts flashing. The drum performs smooth movements for about 30 minutes to keep the steam benefit. By touching any button the anti-crease movements stop and the door unlocks.

A small laundry load helps to reach better results.

7.8 Time Save

With this option you can decrease the programme duration.

- If your laundry is normally or lightly soiled, it may be advisable to shorten the washing programme. Touch this button **once** to decrease the duration.
- In case of smaller load, touch this button **twice** to set an extra quick programme.

The display shows the indicator .

This option can also be used to shorten the Steam programme duration.

7.9 Skipping phase button (Options)

By touching this button you can set:

- Rinse only at first touch. The washing programme starts from the rinsing phase by skipping the wash phase.

All set options (except permanent extra rinse) are deselected automatically.

- Spin only at second touch. The appliance skips wash and rinse phase.
- Drain only at third touch. The appliance performs only the drain phase.

At firth touch the appliance proposes the default setting of the washing programme again.

7.10 Delay Start

With this option you can delay the start of a programme in a more convenient time.

Touch the button repeatedly to set the required delay. The time increases by steps of 30 minutes up to 90' and from 2 hours up to 20 h.

After touching the Start/Pause button, the display shows the indicator and the selected delay time and the appliance begins the countdown.

7.11 Anti-Allergy

Set this option with Cottons programme only. The fixed temperature at 60°C cannot be changed.

This option removes micro-organisms thanks to a washing phase with the temperature maintained above 60°C for several minutes. This helps in removing germs, bacteria, micro-organism and particles. The addition of vapour together with an additional rinsing phase ensures a proper removal of detergent residues and pollens/allergenic items, making it suitable for delicate and sensitive skins.

7.12 Start/Pause

Touch the Start/Pause button to start, pause the appliance or interrupt a running programme.

8. PROGRAMMES

8.1 Programme Chart

Washing programmes

Programme	Programme description
Washing programmes	
Eco 40-60	**White cotton and fast-coloured cotton**. Normally soiled items. The energy consumption decreases and the time of the washing programme is extended, ensuring good washing results.

Programme	Programme description
Cottons	**White cotton and coloured cotton**. Normally, heavily and lightly soiled items.
Synthetics	**Synthetic items or mixed fabric items**. Normally soiled items.
Delicates	**Delicate fabrics such as acrylics, viscose and mixed fabrics requiring gentler washing**. Normally and lightly soiled items.
Wool/Silk 	**Machine washable wool, hand washable wool and other fabrics** with «hand washing» care symbol[1)].
Steam programme	
Steam 	**Steam programme for cotton and synthetic items.** Steam can be used for dried[2)], washed or worn once laundry. This programme reduce creases and odours[3)] and relaxes the fibres. When the programme is completed, quickly remove the laundry from the drum. After a steam programme, ironing becomes effortless. Do not use any detergent. If necessary, remove stains by washing or using localized stain removal. Steam programmes do not perform any hygienic cycle. Do not set a Steam programme with these types of items: • Items that are not suitable for tumble drying. • Items with label "Dry clean only".
Washing programmes	
20 min. - 3 kg	**Cotton and synthetic items** lightly soiled or once worn.

Programme	Programme description
Outdoor	Do not use fabric softener and make sure that there is no softener residue in the detergent dispenser. **Outdoor clothing, technical, sport fabrics, waterproof and breathable jackets, shell jackets with a removable fleece or inner insulation**. The recommended laundry load is 2.5 kg. This programme can also be used as water-repellent restoring cycle, specifically tailored for treating clothes with a hydrophobic coating. To perform the water-repellent restoring cycle, proceed as follows: • Pour the washing detergent in the compartment. • Pour a special water-repellent restorer for fabric in the drawer compartment for fabric softener. • Reduce the laundry load to 1 kg. To further improve the water-repellent restoring action, dry the laundry in a tumble dryer by setting the Outdoor drying programme (if available and if the garment care label permits tumble drying).
Duvet	**Single synthetic blanket, padded clothes, duvets, down jackets** and similar items.
Sports	**Synthetic items.** A cycle for outdoor sport clothes normal soiled.

1) During this cycle the drum rotates slowly to ensure a gentle wash. It can seem that the drum doesn't rotate or doesn't rotate properly, but this is normal for this programme.

2) If you set a Steam programme with dried laundry, at the end of the cycle the laundry can be humid. Line dry the items for about 10 minutes.

3) Steam programme doesn't remove particularly intense odour.

Programme temperature, maximum spin speed and maximum load

Programme	Default temperature Temperature range	Reference spin speed Spin speed range	Maximum load
Eco 40-60	40 °C**1)** 60 °C - 30 °C**2)**	1400 rpm 1400 rpm - 400 rpm	10 kg
Cottons	40 °C 95 °C - Cold	1400 rpm 1400 rpm - 400 rpm	10 kg
Synthetics	40 °C 60 °C - Cold	1200 rpm 1200 rpm - 400 rpm	4 kg

Programme	Default temperature Temperature range	Reference spin speed Spin speed range	Maximum load
Delicates	30 °C 40 °C - Cold	1200 rpm 1200 rpm - 400 rpm	2 kg
Wool/Silk	40 °C 40 °C - Cold	1200 rpm 1200 rpm - 400 rpm	1.5 kg
Steam	-	-	1 kg
20 min. - 3 kg	30 °C 40 °C - 30 °C	1200 rpm 1200 rpm - 400 rpm	3 kg
Outdoor	30 °C 40 °C - Cold	1200 rpm 1200 rpm - 400 rpm	2.5 kg[3)] 1 kg[4)]
Duvet	40 °C 60 °C - Cold	800 rpm 800 rpm - 400 rpm	3 kg
Sports	30 °C 40 °C - Cold	1200 rpm 1200 rpm - 400 rpm	4 kg

1) According to Commission Regulation EU 2019/2023, this programme at 40 °C is able to clean normally soiled cotton laundry declared to be washable at 40 °C or 60 °C, together in the same cycle.

For the reached temperature in the laundry, the programme duration and other data, please refer to 'Consumption Values' chapter.
The most efficient programmes in terms of energy consumption are generally those that perform at lower temperatures and longer duration.

2) **Standard programmes for the Energy Label consumption values.** According to EU regulation 1061/2010, this programme at 60 °C is the «Standard 60°C cotton programme» and at 30 °C is the «Standard 40°C cotton programme». They are the most efficient programmes in terms of combined energy and water consumption for washing normally soiled cotton laundry.

The water temperature of the washing phase may differ from the temperature declared for the selected programme.

3) Washing programme.

4) Washing programme and waterproofing phase.

Programme options compatibility

	Eco 40-60	Cottons	Synthetics	Delicates	Wool/Silk	Steam	20 min. - 3 kg	Outdoor	Duvet	Sports
Spin	■	■	■	■	■		■	■	■	■
Rinse Hold	■	■	■	■	■			■		■
Extra Silent dB	■	■	■	■						
Stains[1)]	■	■	■							
Prewash	■	■	■							■
Extra Rinse	■	■	■	■				■		■
Delay Start	■	■	■	■	■	■	■	■	■	■
Time Save[2)]	■	■	■	■		■				
Rinse only	■	■	■	■	■		■	■	■	■
Spin only	■	■	■	■	■		■	■	■	■
Drain only	■	■	■	■	■		■	■	■	■
Anti-Allergy		■								
Plus Steam[3)]	■	■	■							

	Eco 40-60	Cottons	Synthetics	Delicates	Wool/Silk	Steam	20 min. - 3 kg	Outdoor	Duvet	Sports
Soft Plus	■	■	■	■					■	

1) This option is not available with temperature lower than 40 °C.

2) If you set the shortest duration, we recommend that you decrease the load size. It is possible to fully load the appliance, however the washing results can be less satisfactory.

3) This option is not available with temperature lower than 40 °C.

Suitable detergents for washing programmes

Programme	Universal powder[1)]	Liquid Universal	Liquid for coloureds	Delicates woollens	Special
Eco 40-60	▲	▲	▲	--	--
Cottons	▲	▲	▲	--	--
Synthetics	▲	▲	▲	--	--
Delicates	--	--	--	▲	▲
Wool/Silk	--	--	--	▲	▲
20 min. - 3 kg	--	▲	▲	--	--
Outdoor	--	--	--	▲	▲
Duvet	--	--	--	▲	▲
Sports	--	▲	▲	--	▲

1) At temperature higher than 60 °C the use of powder detergent is recommended.

▲ = Recommended -- = Not recommended

8.2 Woolmark Apparel Care - Blue



The wool wash cycle of this machine has been approved by The Woolmark Company for the washing of wool garments labelled as «hand wash» provided that the garments are washed according to the instructions issued by the manufacturer of this washing machine. Follow the garment care label for drying and other laundry instructions. M1230

The Woolmark symbol is a Certification mark in many countries.

9. BEFORE FIRST USE

During installation or before first use you may observe some water in the appliance. This is a residual water left in the appliance after a full functional test in the factory to ensure the appliance is delivered to customers in perfect working order and is no cause for concern.

1. Make sure that all transit bolts have been removed from the appliance.
2. Make sure that the electrical power is available and the water tap is open.
3. Pour 2 litres of water into the detergent compartment marked by .

This action activates the drain system.

4. Pour a small quantity of detergent into the compartment marked by .
5. Set and start a programme for cotton at the highest temperature without any laundry in the drum.

This removes all possible dirt from the drum and the tub.

10. SETTINGS

10.1 Child Lock

With this option you can prevent that the children play with the control panel.

- To **activate/deactivate** this option, touch the Stains/Prewash and the Extra Rinse buttons simultaneously until the indicator **comes on/goes off** on the display.

You can activate this option:

- After you touch the Start/Pause button: all the buttons and the programme dial are deactivated (except On/Off button).
- Before you touch the Start/Pause button: the appliance cannot start.

The appliance keeps the selection of this option after you switch it off.

10.2 Acoustic signals

This appliance is provided with different acoustic signals, that operate when:

- You activate the appliance (special short tune).
- You deactivate the appliance (special short tune).
- You touch the buttons (click sound).
- You make a wrong selection (3 short sounds).
- The programme is completed (sequence of sounds for about 2 minutes).
- The appliance has a malfunction (sequence of short sounds for about 5 minutes).

To **deactivate/activate** the acoustic signals when the programme is completed, touch the Extra Rinse and the Anti-Allergy buttons simultaneously for about 6 seconds.

If you deactivate the acoustic signals, they continue operate when the appliance has a malfunction.

10.3 Permanent Extra Rinse

With this option you can permanently have an extra rinse when you set a programme where it is selectable.

- To **activate/deactivate** this option touch the Extra Rinse button and the Options button simultaneously the relevant indicator **comes on/goes off**. This option adds two rinses and the display shows +2.

10.4 Soft Plus

Set the Soft Plus option to optimise the fabric softener distribution and improve the fabric softness.

It is suggested when you use the fabric softener.

This option increases slightly the programme duration.

To **activate/deactivate** this option touch the Temp. button and the Spin button simultaneously until the + indicator **comes on/goes off** above the indicator.

11. DAILY USE

WARNING!
Refer to Safety chapters.

11.1 Activating the appliance

1. Connect the mains plug to the mains socket.
2. Open the water tap.
3. Press the On/Off button for a few seconds to activate the appliance.

A short tune sounds (if activated). The appliance automatically proposes a default programme. The relevant indicator illuminates.

The display shows the maximum load, the default temperature, the default spin speed, the indicators of the phases making up the programme and the cycle duration.

11.2 Loading the laundry

1. Open the appliance door.
2. Shake the items before you put them in the appliance.
3. Put the laundry in the drum, one item at a time.

Make sure not to put too much laundry in the drum.

4. Close the door firmly.

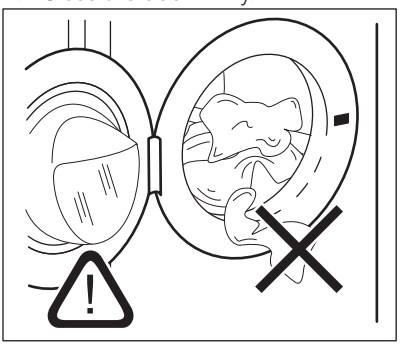

CAUTION!
Make sure that no laundry stays between the seal and the door. There is a risk of water leakage or damage to the laundry.

CAUTION!
Washing heavily oiled, greasy stains could cause damage rubber parts of the washing machine.

11.3 Filling the detergent and additives

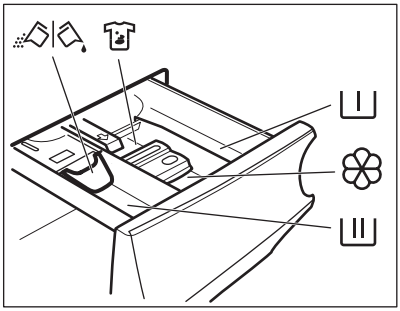

Compartment for prewash phase an soak programme.

Compartment for washing phase.

Compartment for liquid additives (fabric conditioner, starch).

MAX Maximum level for quantity of liquid additives.

Compartment for stain remover.

Flap for powder or liquid detergent.

Always follow the instructions that you find on the packaging of the detergent products, but we recommend that you do not exceed the maximum indicated level (**MAX**). This quantity will however guarantee the best washing results.

After a washing cycle, if necessary, remove any detergent residue from the detergent dispenser.

11.4 Check the position of the flap

1. Pull out the detergent dispenser until it stops.
2. Press the lever down to remove the dispenser.

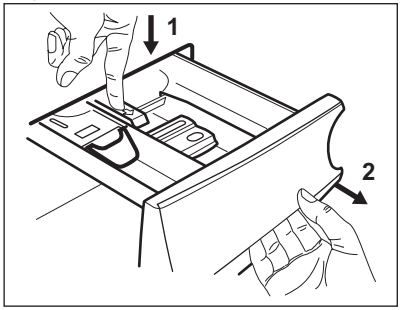

3. To use powder detergent, turn the flap up.

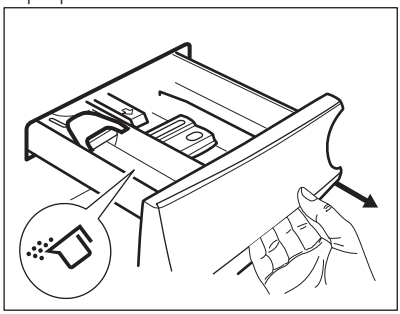

4. To use liquid detergent, turn the flap down.

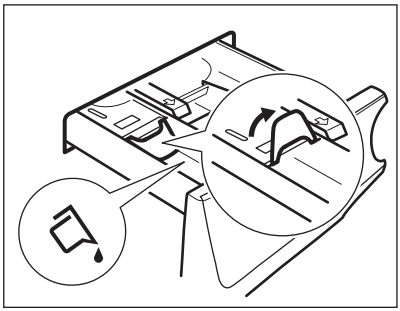

With the flap in the position DOWN:

- Do not use gelatinous or thick liquid detergents.
- Do not put more liquid detergent than the limit shown on the flap.
- Do not set the prewash phase.
- Do not set the delay start function.

5. Measure out the detergent and the fabric conditioner.
6. Carefully close the detergent dispenser.

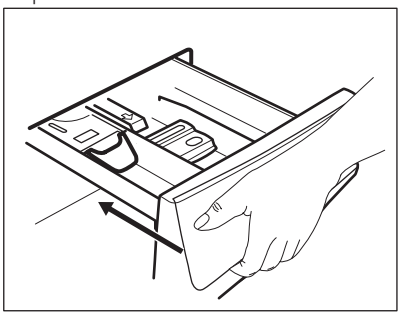

Make sure that the flap does not cause a blockage when you close the drawer.

11.5 Setting a programme

1. Turn the programme dial to select the desired washing programme. The related programme indicator comes on.

The indicator of the Start/Pause button flashes.
The display shows the maximum declared load for the programme, the default temperature, the default spin speed, the washing phase indicators (when available) and an indicative programme duration.

2. To change the temperature and/or the spin speed, touch the related buttons.
3. If desired, set one or more options by touching the related buttons. The related indicators come on in the display and the given information changes accordingly.

In case a selection is **not possible**, no indicator comes on and an acoustic signal sounds.

11.6 Starting a programme

Touch the Start/Pause button to start the programme.
The related indicator stops flashing and stays on.
In the display, the indicator of the operating phase starts flashing.
The programme starts, the door is locked. The display shows the indicator .

The drain pump can operate shortly before the appliance fills water.

11.7 Starting a programme with the delay start

1. Touch the Delay Start button repeatedly until the display shows the desired delay time. The indicator goes on.

2. Touch the Start/Pause button.

The appliance starts the countdown of the delay start.
When the countdown is completed, the programme starts.

The ProSense estimation starts at the end of the countdown.

Cancelling the delay start after the countdown has started

To cancel the delay start:

1. Touch the Start/Pause button to pause the appliance. The related indicator flashes.
2. Touch the Delay Start button repeatedly until the display shows .
3. Touch the Start/Pause button again to start the programme immediately.

Changing the delay start after the countdown has started

To change the delay start:

1. Touch the Start/Pause button to pause the appliance. The related indicator flashes.
2. Touch the Delay Start button repeatedly until the display shows the desired delay time.
3. Touch the Start/Pause button again to start the new countdown.

11.8 The ProSense load detection

The programme duration in the display is referred to a **medium/high load**.

After touching the Start/Pause button, the maximum declared load indicator goes off, the indicator flashes, the ProSense starts the laundry load detection:

1. The appliance detects the load in the first 30 seconds: the indicator **kg** and the time dots flash, the drum rotates shortly.
2. At the end of the load detection, the indicator **kg** goes off and the time dots stop flashing. The programme duration will be adjusted accordingly and could increase or decrease. After further 30 seconds, the water filling starts.

At the end of the load detection, **in case of drum overload**, the indicator **MAX** is flashing in the display:

In this case, for 30 seconds, it is possible to pause the appliance and remove the exceeding garments.

Once removed the exceeding garments, touch the Start/Pause button to start the programme again. The ProSense phase can be repeated up to three times (see point 1).

Important! If the laundry amount will not be reduced, the washing programme starts anyway, despite the overload. In this case, it will be not possible to guarantee the best washing results.

About 20 minutes after the programme start, the programme duration could be adjusted again depending on the capacity of water absorption of the fabrics.

The ProSense detection is carried out with complete washing programmes only (no skipping phase selected).

11.9 Programme phase indicators

When the programme starts the indicator of the running phase flashes and the other phase indicators are steady on.

E.g. the washing or pre wash phase is running: .

When the phase ends the relevant indicator stops flashing and is steady on. The next phase indicator starts flashing.

E.g. the rinse phase is running: .

If you select the Plus Steam the steam phase indicators come on.

The steam phase is running: .

The anti-crease phase is running: .

11.10 Interrupting a programme and changing the options

When the programme is running, you can change **only some** options:

1. Touch the button Start/Pause.

The related indicator flashes.

2. Change the options. The given information in the display changes accordingly.
3. Touch the button Start/Pause again.

The washing programme continues.

11.11 Cancelling a running programme

1. Press the button On/Off to cancel the programme and to deactivate the appliance.
2. Press the button On/Off again to activate the appliance.

Now, you can set a new washing programme.

If the ProSense phase is already carried out and the water filling is already started, the new programme starts **without repeating the ProSense phase**. The water and the detergent are not drained out in order to avoid waste. The display shows the maximum duration of the programme, updating it about 20 minutes after the starting of the new programme.

11.12 Opening the door - Adding garments

While a programme or the delay start operates, the appliance door is locked.

If the temperature and level of the water in the drum are too high and/or the drum still rotates you cannot open the door.

1. Touch the button Start/Pause.

In the display the related door lock indicator goes off.

2. Open the appliance door. If necessary, add or remove the items.
3. Close the door and touch the button Start/Pause.

The programme or the delay start continues.

4. The door can be opened when the programme is complete, or set Spin/Drain programme/option and than press Start/Pause button.

11.13 End of the programme

When the programme has finished, the appliance stops automatically. The acoustic signals operate (if they are active).

In the display all washing phase indicators become steady and the time area shows 0.

The indicator of the Start/Pause button goes off.

The door unlocks and the indicator goes off.

1. Press the On/Off button to deactivate the appliance.

After five minutes from the end of the programme, the energy saving function automatically deactivates the appliance.

When you activate the appliance again, the display show the end of the last selected programme. Turn the programme dial to set a new cycle.

2. Remove the laundry from the appliance.
3. Make sure that the drum is empty.
4. Keep the door and the detergent dispenser slightly ajar to prevent mildew and odours.
5. Close the water tap.

11.14 Draining water out after end of cycle

If you have chosen a programme or an option that does not empty out the water of the last rinse, the programme is completed, but:

- The display shows the indicator 0, the option indicator or dB and the door locked indicator . The indicator of the running phase flashes.
- The drum still turns at regular intervals to prevent the creases in the laundry.
- The door stays locked.
- You must drain the water to open the door:

1. If necessary, touch the Spin button to decrease the spin speed proposed by the appliance.
2. Touch the Start/Pause button:
   - If you have set , the appliance drains the water and spins.
   - If you have set dB, the appliance only drains the water.

The option indicator or dB goes out, while the indicator flashes and then goes off.

3. When the programme is completed and the door locked indicator goes off, you can open the door.
4. Press the On/Off button a few seconds to deactivate the appliance.

In any case, the appliance empties the water out automatically after approximately 18 hours.

11.15 Stand-by option

The Stand-by function automatically deactivates the appliance to decrease the energy consumption when:

- You do not use the appliance for 5 minutes before you touch the Start/Pause button.
  Press the button On/Off to activate the appliance again.
- After 5 minutes from the end of the washing programme
  Press the On/Off button to activate the appliance again.
  The display shows the end of the last set programme.
  Turn the programme dial to set a new cycle.

If you set a programme or an option that ends with water in the drum, the Stand-by function **doesn't deactivate** the appliance to remind you to drain the water.

12. HINTS AND TIPS

WARNING!
Refer to Safety chapters.

12.1 The laundry load

- Divide the laundry into: white, coloured, synthetics, delicates and wool.
- Follow the washing instructions on the laundry care labels.
- Do not wash white and coloured items together.
- Some coloured items can discolour with the first wash. We recommend that you wash them separately for the first couple of times.
- Turn multilayered fabrics, wool and items with printed illustrations inside out.
- Pre-treat tough stains.
- Wash stubborn stains with a special detergent.
- Be careful with curtains. Remove the hooks and put the curtains in a washing bag or pillowcase.
- Do not wash laundry without hems or with cuts. Use a washing bag to wash small and/or delicate items (e.g. underwired bras, belts, tights, shoelaces, ribbons, etc.).
- A very small load can cause balance problems with the spin phase leading to excessive vibration. If this occurs:
  a. interrupt the programme and open the door (refer to "Daily Use" chapter);
  b. manually redistribute the load so that the items are spaced evenly around the tub;
  c. press the Start/Pause button. The spin phase continues.
- Button up pillowcases, close zippers, hooks and poppers. Tie up belts, cords, shoelaces, ribbons and any other loose elements.
- Empty pockets and unfold the items.

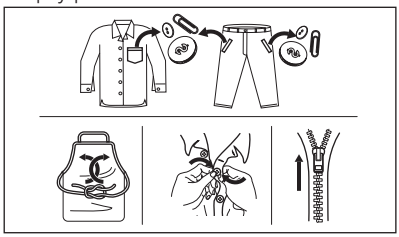

12.2 Stubborn stains

For some stains, water and detergent is not sufficient.

We recommend that you pre-treat these stains before you put the items in the appliance.

Special stain removers are available. Use the special stain remover that is applicable to the type of stain and fabric.

12.3 Detergent type and quantity

The choice of detergent and use of correct quantities not only affects your wash performance, but also helps to avoid waste and protect the environment:

- Use only detergents and other treatments specially made for washing machines. First, follow these generic rules:
  – powder detergents for all types of fabric, excluding delicate. Prefer powder detergents containing bleach for whites and laundry sanitization,
  – liquid detergents, preferably for low temperature wash programmes (60 °C max) for all types of fabric, or special ones for woollens only.

- The choice and quantity of detergent will depend on: type of fabric (delicates, woollens, cottons, etc), the colour of clothes, size of the load, degree of soiling, wash temperature and hardness of the water used.
- Follow the instructions that you find on packaging of the detergents or other treatments without exceeding the indicated maximum level (**MAX**).
- Do not mix different types of detergents.
- Use less detergent if:
  - you are washing a small load,
  - the laundry is lightly soiled,
  - there is large amounts of foam during washing.
- When using detergent tabs or pods, always put them inside the drum, not in the detergent dispenser.

Insufficient detergent may cause:
- unsatisfactory washing results,
- the wash load to turn grey,
- greasy clothes,
- mould in the appliance.

Excessive detergent may cause:
- sudsing,
- reduced washing effect,
- inadequate rinsing,
- a greater impact for the environment.

12.4 Ecological hints

To save water, energy and to help protect the environment, we recommend that you follow these tips:

- Loading the appliance to the **maximum capacity indicated for each programmes helps to reduce energy and water consumption**.
- With adequate pre-treatment, stains and limited soiling can be removed; the laundry can then be washed at a lower temperature.
- To use the correct quantity of detergent, refer to the quantity suggested by the detergent producer and check the water hardness of you domestic system. Refer to 'Water hardness'.
- Set the **maximum possible spin speed** for the selected washing programme **before drying your laundry in a tumble dryer**. This will save energy during drying!

12.5 Water hardness

If the water hardness in your area is high or moderate, we recommend that you use a water softener for washing machines. In areas where the water hardness is soft it is not necessary to use a water softener.

To find out the water hardness in your area, contact your local water authority.

Use the correct quantity of water softener. Follow the instructions that you find on the packaging of the product.

13. CARE AND CLEANING

WARNING!
Refer to Safety chapters.

13.1 Periodic cleaning schedule

Periodic cleaning helps to extend the life of your appliance.

After each cycle, keep the door and the detergent dispenser slightly ajar to get air circulation and dry the humidity inside the appliance: this will prevent mildew and odours.

If the appliance is not used for a long time: close the water tap and unplug the appliance.

Indicative periodic cleaning schedule:

Descaling	Twice a year
Maintenance wash	Once a month
Clean door seal	Every two months
Clean drum	Every two months
Clean detergent dispenser	Every two months

Clean drain pump filter	Twice a year
Clean the inlet hose and the valve filter	Twice a year

The following paragraphs explain how you should clean each part.

13.2 Removing foreign objects

Make sure that pockets are empty and all loose elements are tied up before running your cycle. Refer to 'The laundry load' in 'Hints and tips'.

Remove any foreign objects (such as metal clip, buttons, coins, etc) that you may find in the door seal, the filters and the drum. Refer to 'Door seal with double lip trap', 'Cleaning the drum', 'Cleaning the drain pump' and 'Cleaning the inlet hose and the valve filter' paragraphs. If necessary, please contact the Authorised Service Centre.

13.3 External cleaning

Clean the appliance with mild soap and warm water only. Fully dry all the surfaces.

Do not use a scouring pads or any scratching material.

CAUTION!
Do not use alcohol, solvents or chemical products.

CAUTION!
Do not clean the metal surfaces with chlorine-based detergent.

13.4 Descaling

If the water hardness in your area is high or moderate, we recommend that you use a water descaling product for washing machines.

Regularly examine the drum to check for limescale.

The regular detergents already contain water softening agents, but we recommend to run a cycle with empty drum and a descaling product occasionally.

Always follow the instructions that you find on the packaging of the product.

13.5 Maintenance wash

The repeated and prolonged use of low temperature programmes can cause detergent deposits, fluff residues, bacterial growth inside the drum and the tub. This could generate bad odours and mildew.

To eliminate these deposits and hygienize the inner part of the appliance, run a maintenance wash regularly (at least once a month):

1. Remove all laundry from the drum.
2. Run a cotton programme with the highest temperature with a small quantity of powder detergent.

13.6 Door seal

This appliance is designed with a **self cleaning draining system**, allowing light fluff fibers that fall off the clothes to be drained out with the water. Regularly examine the seal. Coins, buttons, other small items can be recovered at the end of the cycle.

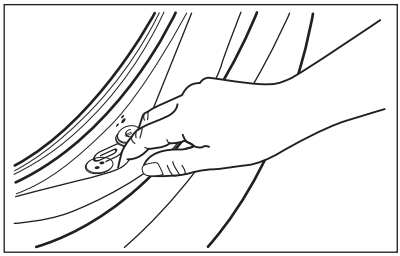

Clean it when needed, using ammonia cream cleanser agent without scratching the seal surface.

Always obey the instructions that you find on the packaging of the product.

13.7 Cleaning the drum

Regularly examine the drum to prevent rust forming.

For a complete cleaning:

1. Clean the drum with special products for stainless steel.

   Always follow the instructions that you find on the packaging of the product.

2. Run a short cotton programme at high temperature with empty drum and with a small quantity of powder detergent, in order to rinse out any residues left .

13.8 Cleaning the detergent dispenser

To prevent possible deposits of dried detergent or clotted fabric softener and/or formation of mould in the detergent dispenser drawer, once in a while carry out the following cleaning procedure:

1. Open the drawer. Press the catch downwards as indicated in the picture and pull it out.

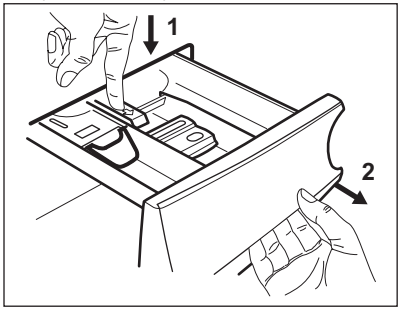

2. Remove the top part of the additive compartment to aid cleaning and flush it out under running warm water, to remove any traces of accumulated detergent. After cleaning, replace the top part in its position.

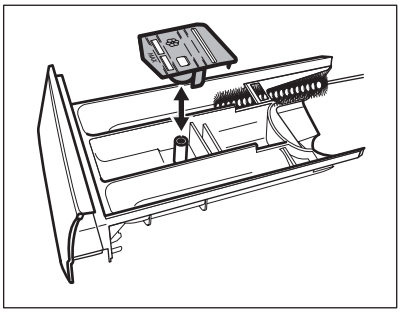

3. Make sure that all detergent residue is removed from the upper and lower part of the recess. Use a small brush to clean the recess.

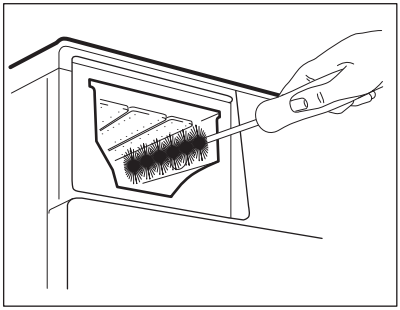

4. Insert the detergent drawer into the guide rails and close it. Run the rinsing programme without any clothes in the drum.

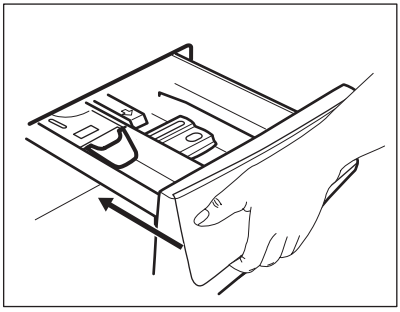

13.9 Cleaning the drain pump

WARNING!
Disconnect the mains plug from the mains socket.

Regularly check the drain pump filter and make sure that it is clean.

Clean the drain pump if:

- The appliance does not drain the water.
- The drum does not turn.
- The appliance makes an unusual noise because of the blockage of the drain pump.
- The display shows the alarm code E20.

WARNING!

- Do not remove the filter while the appliance operates.
- Do not clean the pump if the water in the appliance is hot. Wait until the water cools down

Proceed as follows to clean the pump:

1. Open the pump cover.

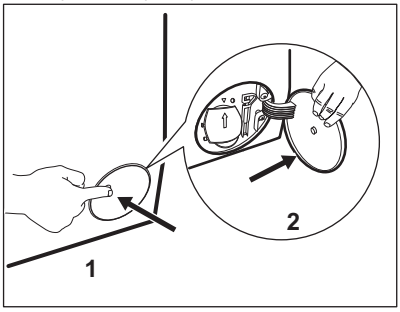

2. Place a suitable bowl below the drain pump access to collect the water that flows out.
3. Open the chute downwards. Always keep a rag nearby to dry up any water spillages when removing the filter.

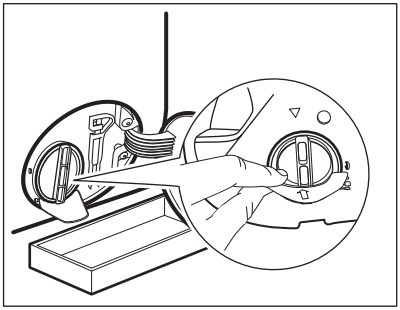

4. Turn the filter 180 degrees in anti-clockwise direction to open it, without removing. Let the water flow out.

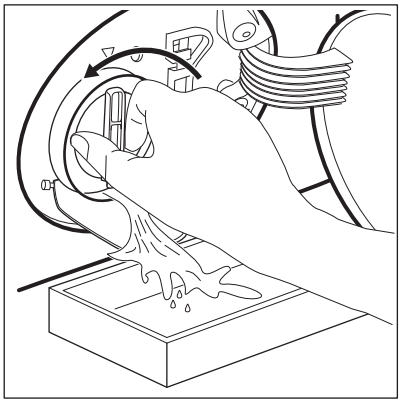

5. When the bowl is full of water, turn the filter back and empty the container.
6. Repeat the steps 4 and 5 until the water stops to flow out.
7. Turn the filter anti-clockwise to remove it.

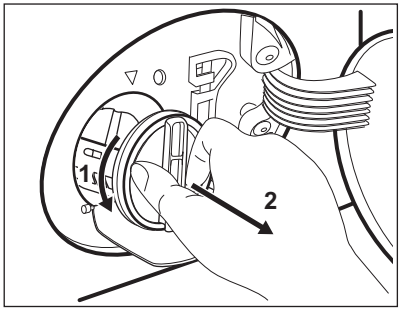

8. If it is necessary, remove fluff and objects from the filter recess.
9. Make sure that the impeller of the pump can rotate. If it does not rotate, contact the Authorised Service Centre.

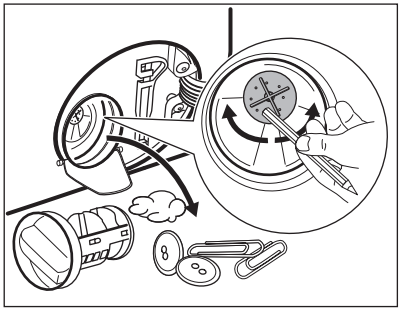

10. Clean the filter under the water tap.

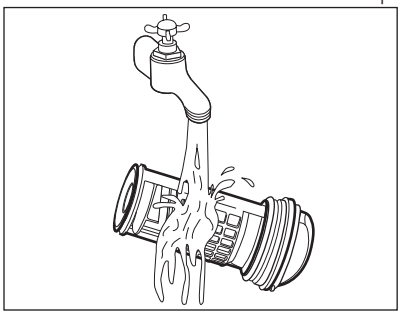

11. Put the filter back into the special guides by turning it clockwise. Make sure that you tighten the filter correctly to prevent leakages.

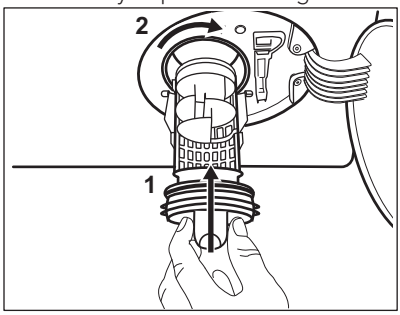

12. Close the pump cover.

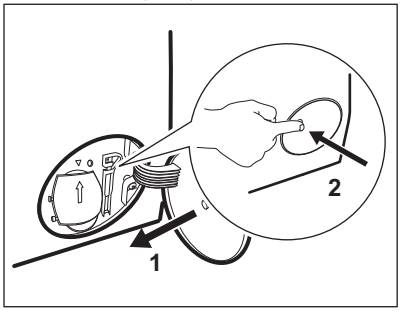

When you drain the water with the emergency drain procedure, you must activate the drain system again:

- **a.** Put 2 litres of water in the main wash compartment of the detergent dispenser.
- **b.** Start the programme to drain the water.

13.10 Cleaning the inlet hose and the valve filter

It is recommended to clean both the filters of the inlet hose and valve occasionally to remove any deposit, collected over the time:

1. Remove the inlet hose from the tap and clean the filter.

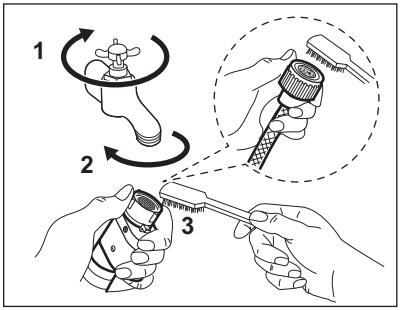

2. Remove the inlet hose from the appliance by loosening the ring nut.

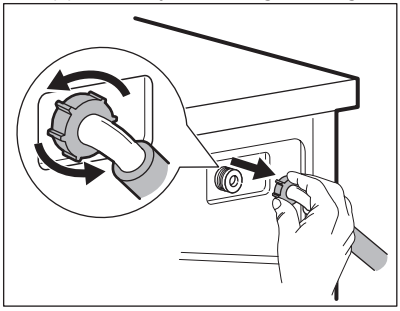

3. Clean the valve filter on the back of the appliance with a toothbrush.

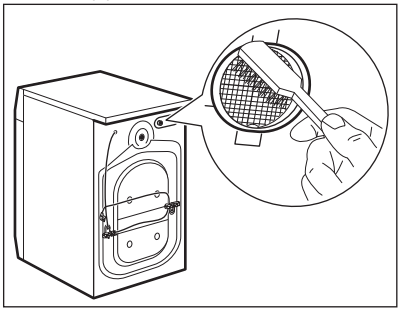

4. When you reconnect the hose to the back of the appliance, turn it left or right (not in vertical position) depending on the position of your water tap.

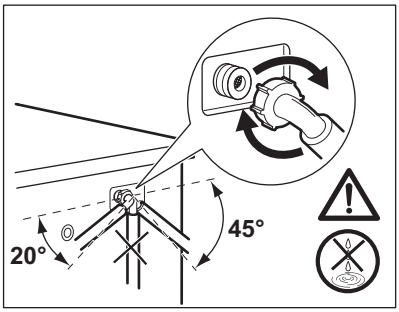

13.11 Emergency drain

If the appliance cannot drain the water, carry out the same procedure, described in 'Cleaning the drain pump' paragraph. If necessary, clean the pump.

When you drain the water with the emergency drain procedure, you must activate the drain system again:

1. Put 2 litres of water in the main wash compartment of the detergent dispenser.
2. Start the programme to drain the water.

13.12 Frost precautions

If the appliance is installed in an area where the temperature can reach the values around 0° C or drop below, remove the remaining water from the inlet hose and the drain pump.

1. Disconnect the mains plug from the mains socket.
2. Close the water tap.
3. Put the two ends of the inlet hose in a container and let the water flow out of the hose.
4. Empty the drain pump. Refer to the emergency drain procedure.
5. When the drain pump is empty, install the inlet hose again.

WARNING!
Make sure that the temperature is higher than 0 °C before you use the appliance again.
The manufacturer is not responsible for damages caused by low temperatures.

14. TROUBLESHOOTING

WARNING!
Refer to Safety chapters.

14.1 Alarm Codes and Possible failures

The appliance does not start or it stops during operation. First try to find a solution to the problem (refer to the tables).

WARNING!
Deactivate the appliance before carrying out any check.

With some problems, the display shows an alarm code and the Start/Pause **button may flash continuously:**

Problem	Possible solution

E 10 The appliance does not fill with water properly.	• Make sure that the water tap is open. • Make sure that the pressure of the water supply is not too low. For this information, contact your local water authority. • Make sure that the water tap is not clogged. • Make sure that the inlet hose has no kinks, damages or bends. • Make sure that the connection of the water inlet hose is correct. • Make sure that the filter of the inlet hose and the filter of the valve are not clogged. Refer to 'Care and cleaning'.
E20 The appliance does not drain the water.	• Make sure that the sink spigot is not clogged. • Make sure that the drain hose has no kinks or bends. • Make sure that the connection of the drain hose is correct. • Set the drain programme if you set a programme without drain phase. • Set the drain programme if you set an option which ends with water in the tub.
E40 The appliance door is open or not closed correctly.	• Make sure that the door is properly closed.
E91 No communication between electronic elements of the appliance.	• The programme was not finished properly or the appliance stopped too early. Switch the appliance off and on again. • If the alarm code appears again, contact the Authorised Service Centre.
EH0 The mains supply is unstable.	• Wait until mains supply is stable.
EF0 The anti-flood device is on.	• Disconnect the appliance and close the water tap. Contact the Authorised Service Centre.

If the display shows other alarm codes, deactivate and activate the appliance. If the problem continues, contact the Authorised Service Centre.
In case of different problem with the washing machine check the table below for possible solutions.

Problem	Possible solution
The programme does not start.	• Make sure that the mains plug is connected to the mains socket. • Make sure that the appliance door is closed. • Make sure that there is no damaged fuse in the fuse box. • Make sure that the Start/Pause has been touched. • If the delay start is set, cancel the setting or wait for the end of countdown. • Deactivate the Child Lock function if it is on. • Check the position of the knob on the selected programme.
The appliance fills with water and drains immediately.	• Make sure that the drain hose is in the correct position. The hose may be positioned too low. Refer to "Installation instruction".
The spin phase does not operate or the washing cycle lasts longer than usual.	• Set the spin programme. • Adjust manually the items in the tub and start the spin phase again. This problem may be caused by balance problems.
There is water on the floor.	• Make sure that the couplings of the water hoses are tight and there is not water leakages. • Make sure that the water inlet hose and the drain hose have no damages. • Make sure you use the correct detergent and the correct quantity of it.
You cannot open the appliance door.	• Make sure that a washing programme that ends with water in tub, has not been selected. • Make sure that the washing programme is finished. • Set the drain or the spin programme if there is water in the drum. • Make sure that the appliance receives electrical power. • This problem may be caused by a failure of the appliance. Contact the Authorised Service Centre. If you need to open the door, please read carefully "Emergency door opening".
The appliance makes an unusual noise and vibrates.	• Make sure the levelling of the appliance is correct. Refer to "Installation instruction". • Make sure that the packaging and/or the transit bolts are removed. Refer to "Installation instruction". • Add more laundry in the drum. The load may be too small.
The washing results are not satisfactory.	• Increase the detergent quantity or use a different detergent. • Use special products to remove the stubborn stains before you wash the laundry. • Make sure that you set the correct temperature. • Decrease the laundry load.
Too much foam in the drum during the washing cycle.	• Reduce the quantity of detergent.

Problem	Possible solution
After the washing cycle, there are some detergent residues in the dispenser drawer.	• Make sure that the flap is in the correct position (UP for powder detergent - DOWN for liquid detergent). • Make sure you have used the detergent dispenser according the indications given in this user manual.

After the check, activate the appliance. The programme continues from the point of interruption.
If the problem occurs again, contact the Authorised Service Centre.
The necessary data for the service centre are on the rating plate.

14.2 Possible failures

Problem	Possible solution
The programme does not start.	• Make sure that the mains plug is connected to the mains socket. • Make sure that the appliance door is closed. • Make sure that there is no damaged fuse in the fuse box. • Make sure that the Start/Pause has been touched. • If the delay start is set, cancel the setting or wait for the end of countdown. • Deactivate the Child Lock function if it is on.
The appliance does not fill with water properly.	• Make sure that the water tap is open. • Make sure that the pressure of the water supply is not too low. For this information, contact your local water authority. • Make sure that the water tap is not clogged. • Make sure that the inlet hose has no kinks, damages or bends. • Make sure that the connection of the water inlet hose is correct. • Make sure that the filter of the inlet hose and the filter of the valve are not clogged. Refer to "Care and cleaning".
The appliance fills with water and drains immediately	• Make sure that the drain hose is in the correct position. The hose may be positioned too low. Refer to "Installation instruction".
The appliance does not drain the water.	• Make sure that the sink spigot is not clogged. • Make sure that the drain hose has no kinks or bends. • Make sure that the drain filter is not clogged. Clean the filter, if necessary. Refer to "Care and cleaning". • Make sure that the connection of the drain hose is correct. • Set the drain programme if you set a programme without drain phase. • Set the drain programme if you set an option which ends with water in the tub.

Problem	Possible solution
The spin phase does not operate or the washing cycle lasts longer than usual.	• Set the spin programme. • Make sure that the drain filter is not clogged. Clean the filter, if necessary. Refer to "Care and cleaning". • Adjust manually the items in the tub and start the spin phase again. This problem may be caused by balance problems.
There is water on the floor.	• Make sure that the couplings of the water hoses are tight and there is not water leakages. • Make sure that the water inlet hose and the drain hose have no damages. • Make sure you use the correct detergent and the correct quantity of it.
You cannot open the appliance door.	• Make sure that a washing programme that ends with water in tub, has been selected. • Make sure that the washing programme is finished. • Set the drain or the spin programme if there is water in the drum. • Make sure that the appliance receives electrical power. • This problem may be caused by a failure of the appliance. Contact the Authorised Service Centre. If you need to open the door, please read carefully "Emergency door opening".
The appliance makes an unusual noise and vibrates.	• Make sure the levelling of the appliance is correct. Refer to "Installation instruction". • Make sure that the packaging and/or the transit bolts are removed. Refer to "Installation instruction". • Add more laundry in the drum. The load may be too small.
The programme duration increases or decreases during programme execution.	• The ProSense function is able to adjust the programme duration according to the type and the laundry load size. Refer to "The ProSense load detection" in "Daily Use" chapter.
The washing results are not satisfactory.	• Increase the detergent quantity or use a different detergent. • Use special products to remove the stubborn stains before you wash the laundry. • Make sure that you set the correct temperature. • Decrease the laundry load.
Too much foam in the drum during the washing cycle.	• Reduce the quantity of detergent.
After the washing cycle, there are some detergent residues in the dispenser drawer.	• Make sure that the flap is in the correct position (UP for powder detergent - DOWN for liquid detergent). • Make sure you have used the detergent dispenser according the indications given in this user manual.

After the check, activate the appliance. The programme continues from the point of interruption.
If the problem occurs again, contact the Authorised Service Centre.
If the display shows other alarm codes. Deactivate and activate the appliance. If the problem continues, contact the Authorised Service Centre.

14.3 Emergency door opening

In case of power failure or functioning failure the appliance door remains locked. The washing programme continues when the power is restored. If the door remains locked in case of failure, it is possible to open it using the emergency unlock function.

Before opening the door:

CAUTION!
Risk of burns! Make sure that the water temperature is not too high and the laundry is not hot. If necessary, wait until they cool down.

CAUTION!
Risk of injury! Make sure that the drum is not rotating. If necessary, wait until the drum stops rotating.

Make sure that the water level inside the drum is not too high. If necessary, proceed with an emergency drain (refer to «Emergency drain» in «Care and cleaning» chapter).

To open the door, proceed as follows:

1. Press the On/Off button to switch the appliance off.
2. Disconnect the mains plug from the mains socket.
3. Open the filter flap.
4. Pull the emergency unlock trigger downward once. Pull it downward once again, keep it tensed and, in the meanwhile, open the appliance door.

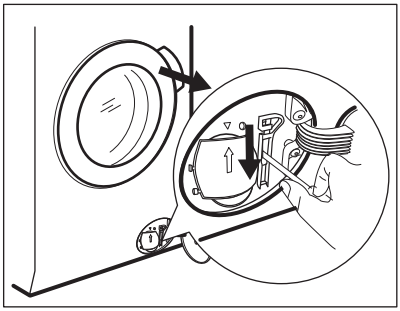

5. Take out the laundry and then close the appliance door.
6. Close the filter flap.

15. CONSUMPTION VALUES

15.1 Introduction

This user manual reports two different tables in order to favour a gradual passage from a regulation to the other:
- Regulation EU 1061/2010, valid up to 28th of February 2021, is related to the Energy Efficiency classes from **A+++** to **D**,
- Regulation EU 2019/2023, valid from 1st March 2021, is related to the Energy Efficiency classes from **A** to **G** set by Regulation EU 2019/2014.

See the web link **www.theenergylabel.eu** for detailed information about Energy Label.

The QR code on the energy label supplied with the appliance provides a web link to the information related to the performance of the appliance in the EU EPREL database. Keep the energy label for reference together with the user manual and all other documents provided with this appliance.
It is also possible to find the same information in EPREL using the link **https://eprel.ec.europa.eu** and the model name and product number that you find on the rating plate of the appliance. Refer to 'Product description' chapter for the position of the rating plate.

15.2 Legend

kg	Laundry load.	**h:mm**	Programme duration.
kWh	Energy consumption.	**°C**	Temperature in the laundry.
Litres	Water consumption.	**rpm**	Spin speed.
%	Remaining moisture at the end of spinning phase. The higher is the spin speed, the higher is the noise and the lower is the remaining moisture.		

Values and programme duration may differ depending on different conditions (e.g. room temperature, water temperature and pressure, load size and type of laundry, supply voltage) and also if you change the default setting of a programme.

15.3 According to Commission Regulation Eu 2019/2023

Eco 40-60 programme	kg	kWh	Litres	h:mm	%	°C	rpm[1)]
Full load	10	1.080	65	3:50	52	38	1351

Eco 40-60 programme	kg	kWh	Litres	h:mm	%	°C	rpm[1)]
Half load	5	0.740	50	2:50	52	38	1351
Quarter load	2.5	0.380	45	2:50	54	26	1351

1) Maximum spin speed.

Power consumption in different modes

Off (W)	Stand-by (W)	Delay start (W)
0.30	0.30	4.00
Time to Off/Standby mode is 15 minutes maximum.		

15.4 According to Regulation 1061/2010

Standard cotton programmes.	Load (kg)	Energy consumption (kWh)	Water consumption (litres)	Approximate programme duration (minutes)	Remaining moisture (%)[1)]
For Standard 60°C cotton: Set Eco 40-60 at 60°C	10	0.90	57	280	52
For Standard 60°C cotton: Set Eco 40-60 at 60°C	5	0.62	49	190	52
For Standard 40°C cotton: Set Eco 40-60 at 30°C	5	0.60	48	190	52

1) At the end of spin phase.

Off Mode (W)	Left On Mode (W)
0.30	0.30
The information given in the chart above is compliant with the EU Commission regulation 1015/2010 implementing directive 2009/125/EC .	

15.5 Common programmes

These values are indicative only.

Programme	kg	kWh	Litres	h:mm	%	°C	rpm[1)]
Cottons[2)] 95°C	10	2.90	90	4:05	52	85	1400
Cottons 60°C	10	1.70	85	3:50	52	55	1400
Cottons[3)] 20°C	10	0.35	85	3:00	52	20	1400
Synthetics 40°C	4	0.80	55	2:15	35	40	1200
Delicates[4)] 30°C	2	0.40	60	1:05	35	30	1200
Wool 30°C	1.5	0.30	65	1:05	30	30	1200

1) Reference indicator of the spin speed.

2) Suitable for washing heavily soiled textiles.

3) Suitable for washing lightly soiled cottons.

4) It also performs as quick washing cycle for lightly soiled laundry.

16. ACCESSORIES

16.1 Available in www.aeg.com/shop or from authorised dealer

Only appropriate accessories approved by AEG ensure the safety standards of the appliance. If unapproved parts are used, any claims will be invalidated.

16.2 Fixing plate kit

If you install the appliance on a plinth, secure the appliance with the fixing plates.

Read carefully the instructions supplied with the accessory.

16.3 Stacking kit

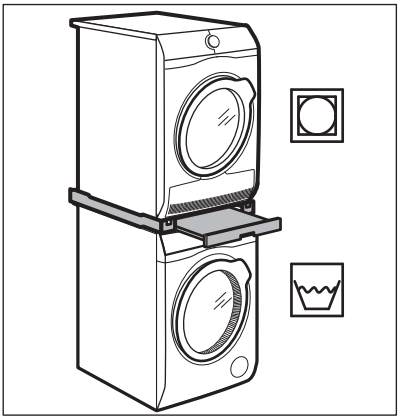

The tumble dryer can be stacked on the top of the washing machine **only by using the correct stacking kit manufactured and approved by AEG**.

Verify the compatible stacking kit by checking the depth of your appliances.

The stacking kit can be used only with the appliances specified in the leaflet provided with the accessory.

Read carefully the instructions supplied with the appliance and with the accessory.

WARNING!
Do not put the tumble dryer under the washing machine.

16.4 Pedestal with the drawer

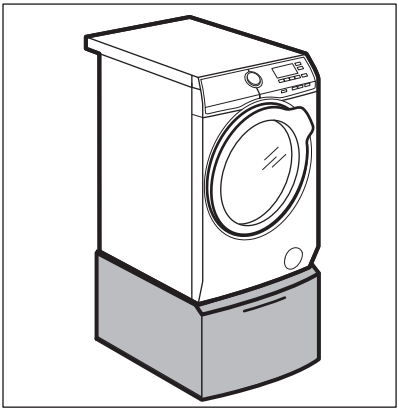

To raise your appliance and make loading and unloading laundry easier.

The drawer can be used for laundry storage e.g.: towels, cleaning products and more.

Read carefully the instructions supplied with the accessory.

17. ENVIRONMENTAL CONCERNS

Recycle materials with the symbol . Put the packaging in relevant containers to recycle it. Help protect the environment and human health by recycling waste of electrical and electronic appliances. Do not dispose of appliances marked with the symbol with the household waste. Return the product to your local recycling facility or contact your municipal office.

www.aeg.com/shop



157008363-A-072020

CE

AEG