EN

BUILT IN REFRIGERATOR
Fridge - Freezer
User manual

BCBS 174 TTK

Index

PRECAUTIONS 2
General warnings 2
Safety warnings 6
Installing and operating your fridge 7
Before using your fridge 8

HOW TO OPERATE THE APPLIANCE 8
Thermostat setting 8
Warnings about temperature adjustments 8
Accessories 9
Ice tray 9
Bottle holder 9

FOOD STORAGE IN THE APPLIANCE 10
Refrigerator compartment 10
Freezer compartment 10

CLEANING AND MAINTENANCE 11
Defrosting the refrigerator compartment 11
Defrosting the freezer compartment 11
Replacing the light bulb 12

SHIPMENT AND REPOSITIONING 13

BEFORE CALLING FOR AFTER SALES SERVICE 13
Energy Saving 14

PARTS OF THE APPLIANCE AND THE COMPARTMENTS 15

The operating instructions apply to several models. Differences may therefore occur.

PART - 1. PRECAUTIONS

Thank you for purchasing this product.

Before using your refrigerator, please carefully read this instruction manual in order to maximize its performance. Store all documentation for subsequent use or for other owners. This product is intended solely for household use or similar applications such as:

- the kitchen area for personnel in shops, offices and other working environments
- on farms, by clientele of hotels, motels and other environments of a residential type at bed and breakfasts (B & B)
- for catering services and similar applications not for retail sale.

This appliance must be used only for purposes of storage of food, any other use is considered dangerous and the manufacturer will not be responsible for any omissions. Also, it is recommended that you take note of the warranty conditions.

General warnings

WARNING: Keep ventilation openings, in the appliance enclosure or in the built-in structure, clear of obstruction.

WARNING: Do not use mechanical devices or other means to accelerate the defrosting process, other than those recommended by the manufacturer.

WARNING: Do not use electrical appliances inside the food storage compartments of the appliance, unless they are of the type recommended by the manufacturer.

WARNING: Do not damage the refrigerant circuit.

WARNING: To avoid a hazard due to the instability of the appliance, it must be fixed in accordance with the instructions.

- If your appliance uses R600a as a refrigerant – you can learn this information from the label on the cooler- you should be careful during shipment and installation to prevent your appliance's cooler elements from being damaged. Although R600a is an environmentally friendly and natural gas. As it is explosive, in the event of a leak due to damage to the cooler elements, move your fridge from open flame or heat sources and ventilate the room where the appliance is located for a few minutes.
- While carrying and positioning the fridge, do not damage the cooler gas circuit.
- Do not store explosive substances such as aerosol cans with a flammable propellant in this appliance.

- This appliance is intended to be used in household and similar applications such as;
  - staff kitchen areas in shops, offices and other working environments
  - farm houses and by clients in hotels, motels and other residential type environments
  - bed and breakfast type environments;
  - catering and similar non-retail applications
- If the socket does not match the refrigerator plug, it must be replaced by the manufacturer, its' service agent or similarly qualified persons in order to avoid a hazard.
- This appliance is not intended for use by persons (including children) with reduced physical, sensory or mental capabilities, or lack of experience and knowledge, unless they have been given supervision or instruction concerning use of the appliance by a person responsible for their safety. Children should be supervised to ensure that they do not play with the appliance.
- A specially grounded plug has been connected to the power cable of your refrigerator. This plug should be used with a specially grounded socket of 16 amperes. If there is no such socket in your house, please have it installed by an authorized electrician.
- This appliance can be used by children aged from 8 years and above and persons with reduced physical, sensory or mental capabilities or lack of experience and knowledge if they have been given supervision or instruction concerning use of the appliance in a safe way and understand the hazard involved. Children shall not play with the appliance. Cleaning and user maintenance, shall not be made by children without supervision.
- If the supply cord is damaged, it must be replaced by the manufacturer, its service agent or similar qualified persons in order to avoid a hazard.
- This appliance is not intended for use at altitudes exceeding 2000 m.

- The refrigerator contains a refrigerant gas (R600a: isobutane) and insulating gas (cyclo/isopentane), with high compatibility with the environment, that are, however, infl ammable.
- We recommend that you follow the following regulations so as to avoid situations dangerous to you:
- Before performing any operation, unplug the power cord from the power socket.
- The refrigeration system positioned behind and inside the Wine Coolers contains refrigerant. Therefore, avoid damaging the tubes.
- If in the refrigeration system a leak is noted, do not touch the wall outlet and do not use open flames. Open the window and let air into the room. Then call a service centre to ask for repair.
- Do not scrape with a knife or sharp object to remove frost or ice that occurs. With these, the refrigerant circuit can be damaged, the spill from which can cause a fire or damage your eyes.
- Do not install the appliance in humid, oily or dusty places, nor expose it to direct sunlight and to water.
- Do not install the appliance near heaters or inflammable materials.
- Do not use extension cords or adapters.
- Do not excessively pull or fold the power cord or touch the plug with wet hands.
- Do not damage the plug and/or the power cord; this could cause electrical shocks or fires.
- It is recommended to keep the plug clean, any excessive dust residues on the plug can be the cause fire.
- Absolutely avoid the use of open flame or electrical equipment, such as heaters, steam cleaners, candles, oil lamps and the like in order to speed up the defrosting phase.
- Do not store medicine or research materials in the Wine Coolers. When the material that requires a strict control of

storage temperatures is to be stored, it is possible that it will deteriorate or an uncontrolled reaction may occur that can cause risks.

- Maintain the ventilation openings in the appliance enclosure or in the built-in structure, free of obstruction.
- Do not place objects and/or containers filled with water on the top of the appliance.
- Do not perform repairs on this Wine Coolers. All interventions must be performed solely by qualified personnel.

Notes:

- Please read the instruction manual carefully before installing and using your appliance. We are not responsible for damage due to misuse.
- Follow all instructions on your appliance and instruction manual, and keep this manual in a safe place to resolve problems that may occur in the future.
- This appliance is produced to be used in homes and it can only be used in domestic environments and for the specified purposes. It is not suitable for commercial or common use. Such use will cause the guarantee of the appliance to be cancelled and our company will not be responsible for the losses to be occurred.
- This appliance is produced to be used in houses and it is only suitable for cooling / storing foods. It is not suitable for commercial or common use and/or for storing substances except for food. Our company is not responsible for the losses to be occurred in the contrary case.

Safety warnings



- Do not use multiple sockets or extension cords.
- Do not plug in damaged, torn or old plugs.
- Do not pull, bend or damage the cord.
- Do not twist and bend the cables, and keep them away from hot surfaces.



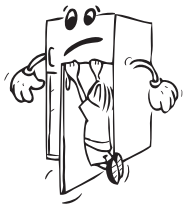

- After installation make sure that the power cable is not trapped underneath appliance.
- This appliance is designed for use by adults, do not allow children to play with the appliance or let them hang off the door.



- Do not plug-in or un-plug from the socket with wet hands to prevent electrocution!
- Do not place glass bottles or beverage cans in the freezer department. Bottles or cans may explode.
- Do not place explosive or flammable material in your fridge for your safety. Place drinks with higher alcohol amount vertically and by closing their necks tightly in the fridge department.



- When taking ice made in the freezer department, do not touch it, ice may cause ice burns and/or cuts.
- Do not touch frozen goods with wet hands! Do not eat ice-cream and ice cubes immediately after you have taken them out of the freezer department!



- Do not re-freeze frozen goods after they have melted. This may cause health issues like food poisoning.

- Do not cover the body or top of fridge with lace. This affects the performance of your fridge.
- Do not operate any electrical appliances inside the refrigerator or freezer.
- Fix the accessories in the fridge during transportation to prevent damage to accessories.

Installing and operating your fridge

Before starting to use your fridge, you should pay attention to the following points:

- Operating voltage for your fridge is 220-240 V at 50Hz.
- The plug must be accessible after installation.
- There can be an odour when you first switch on the appliance. It will disappear after the appliance starts to cool.
- Before making the connection to the power supply, ensure that the voltage on the nameplate corresponds to the voltage of electrical system in your home.
- Insert the plug into a socket with an efficient ground connection. If the socket has no ground contact or the plug does not match, we suggest you to call an authorized electrician for assistance.
- The appliance must be connected with a properly installed fused socket. Power supply (AC) and voltage at the operating point must correspond with the details on the name plate of the appliance (name plate is located on the inside left of the appliance).
- We do not take responsibility for damages that occur due to ungrounded usage.
- Place your fridge in a place where it won't be exposed to direct sunlight.
- Your fridge should never be used outdoors or left under the rain.
- Your appliance should be at least 50 cm away from stoves, Gas ovens and heaters, and should be at least 5 cm away from electrical ovens.
- When your fridge is placed next to a deep freezer, there should be at least 2 cm between them to prevent humidity on the outer surface.
- Do not place heavy items on the appliance.
- Clean the appliance thoroughly, especially in the interior, before use (See Cleaning and Maintenance).



- Installation procedure into the kitchen unit is given in the installation manual. This product is intended to be used in proper kitchen units only.
- Before using your fridge, wipe all parts back with warm water added with a tea spoonful of sodium bicarbonate, and then rinse with clean water and dry. Replace all parts after cleaning.

Before using your fridge

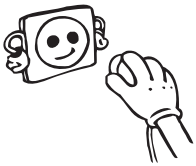

- When it is operated for the first time or after transportation, keep your fridge in the upright position for 3 hours and plug it on to allow efficient operation. Otherwise, you may damage the compressor.
- Your fridge may have a smell when it is operated for the first time; the smell will fade away when your fridge starts to cool.

PART - 2. HOW TO OPERATE THE APPLIANCE

Thermostat setting

The freezer thermostat automatically regulates the inside temperature of the compartments. By rotating the knob from position 1 to 5, colder temperatures can be obtained.

Important note: Do not try to rotate knob beyond 1 position it will stop your appliance.

Freezer & Refrigerator thermostat setting;

1 - 2 : For short-term storage of food in the freezer compartment, you can set the knob between minimum and medium position.

3 - 4 : For long-term storage of food in the freezer compartment, you can set knob to medium position.

5 : For freezing the fresh food. The appliance will run for colder temperatures.

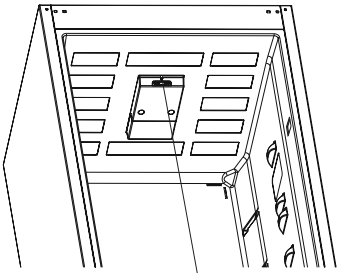

Thermostat knob

Warnings about temperature adjustments

- It is not recommended that you operate your fridge in environments colder than 10°C in terms of its efficiency.
- Temperature adjustments should be made according to the frequency of door openings and the quantity of food kept inside the fridge.
- Your fridge should be operated up to 24 hours according to the ambient temperature without interruption after being plugged in to be completely cooled. Do not open doors of your fridge frequently and do not place much food inside it in this period.
- A 5 minute delaying function is applied to prevent damage to the compressor of your fridge, when you take the plug out and then plug it in again to operate it or when an energy breakdown occurs. Your fridge will start to operate normally after 5 minutes.
- Your fridge is designed to operate in the ambient temperature intervals stated in the standards, according to the climate class stated in the information label. We do not recommend operating your fridge out of stated temperatures value limits in terms of cooling effectiveness.

- This appliance is designed for use at an ambient temperature within the 16°C - 38°C range.

Climate class	Ambient temperature (°C)
T	Between 16 and 43 °C
ST	Between 16 and 38 °C
N	Between 16 and 32 °C
SN	Between 10 and 32 °C

Accessories

Ice tray

- Fill the ice tray with water and place in freezer compartment.
- After the water completely turned into ice, you can twist the tray as shown below to get the ice cube.

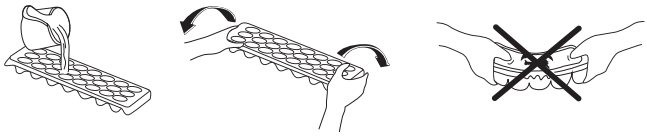

Bottle holder

In order to prevent the bottles slipping or falling over you can use the bottle holder.

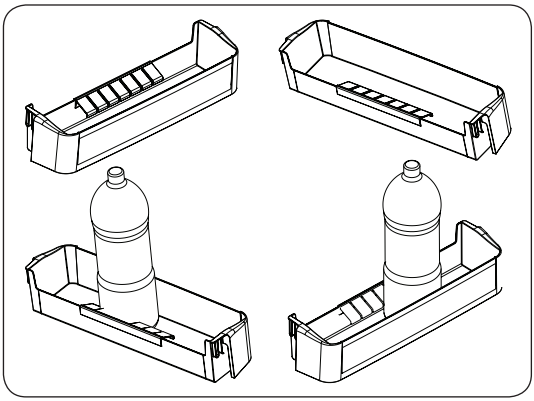

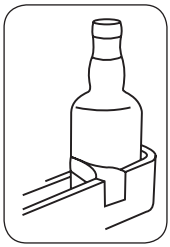

All written and visual descriptions in the accessories may vary according to the appliance model.

PART - 3. FOOD STORAGE IN THE APPLIANCE

Refrigerator compartment

The refrigerator compartment is used for storing fresh food for a few days.

- Do not place food in direct contact with the rear wall of the refrigerator compartment. Leave some space around food to allow circulation of air.
- Do not place hot food or evaporating liquid in the refrigerator.
- Always store food in closed containers or wrapped.
- To reduce humidity and avoid formation of frost, never place liquids in unsealed containers in the refrigerator.
- Meat of all types, wrapped in packages, is recommended to be placed on the glass shelf just above the vegetable bin, where the air is colder.
- You can put fruit and vegetables into the crisper without packaging.
- To avoid cold air escaping, try not to open the door too often, and not leave the door open for a long time.

Freezer compartment

The freezer compartment is used for freezing fresh foods and for storing frozen foods for the period of time indicated on packaging, and for making ice cubes.

- **For freezing fresh food;** wrap and seal fresh food properly, that is the packaging should be air tight and shouldn't leak. Special freezer bags, aluminum foil polythene bags and plastic containers are ideal.
- Do not allow the fresh food to be frozen to come into contact with the already frozen food.
- Always mark the date and the content on the pack and do not exceed the stated storage time.
- In case of a power failure or malfunction, the freezer compartment will maintain a sufficiently low temperature for food storage. However, avoid opening the freezer door to slow down the temperature rise within the freezer compartment.
- The maximum amount of fresh foods that can be loaded in the freezer within 24 hours is indicated on the name plate (see Freezing Capacity).
- Never place warm food in the freezer compartment.
- **When purchasing and storing frozen food products;** ensure that the packaging is not damaged.
- The storage time and the recommended temperature for storing frozen foods are indicated on the packaging. For storing and using, follow the manufacturer's instructions. If no information is provided, food should not be stored for more than 3 months.
- Place frozen food in the freezer compartment as soon as possible after buying it.
- Once the food is thawed, it must not be refrozen; you must cook it as quickly as possible in order to consume or to freeze once again.
- **Storage:** If you want to use the maximum net capacity, you can remove the drawers and store the items directly on the cooling tubes. This will enable you to make use of the entire volume of the compartment.

PART - 4. CLEANING AND MAINTENANCE



- Disconnect the appliance from the power supply before cleaning.



- Do not pour water over the appliance.

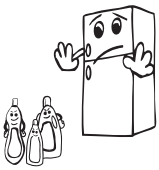

- The refrigerator compartment should be cleaned periodically using a solution of bicarbonate of soda and lukewarm water.

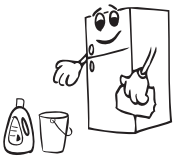

- Clean the accessories separately with soap and water. Do not put them in the dishwasher.

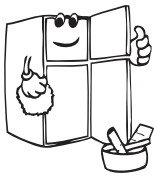

- Do not use abrasive products, detergents or soaps. After washing, rinse with clean water and dry carefully. When the cleaning operations have been completed, reconnect the plug with dry hands.

Defrosting the refrigerator compartment

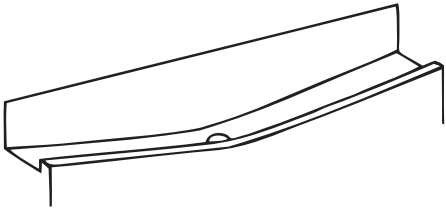

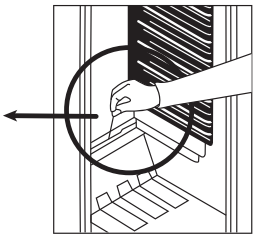

- Defrosting occurs automatically in refrigerator compartment during operation; the defrost water is collected by the evaporating tray and evaporates automatically.
- The evaporating tray and the defrost water drain hole should be cleaned periodically with defrost drain plug to prevent the water from collecting on the bottom of the refrigerator instead of flowing out.
- You can also pour ½ glass of the water to drain hole to clean inside.

Defrosting the freezer compartment

- The frost, which covers the shelves of the freezer compartment, should be removed periodically.
- Do not use sharp metal objects for this operation. They could puncture the refrigerator circuit and cause irreparable damage to the unit. Use the plastic scraper provided.

- When there is more than 5 mm of frost on the shelves, defrosting must be done.
- Before defrosting operation, place the frozen food in a cool place after wrapping them in sheets of newspaper in order to obtain its temperature steady for long time.
- To accelerate the defrosting process place one or more basins of warm water in the freezer compartment.
- Dry the inside of the compartment with a sponge or a clean cloth.
- Once the unit has been defrosted, place the food into the freezer and remember to consume them in a short period of time.

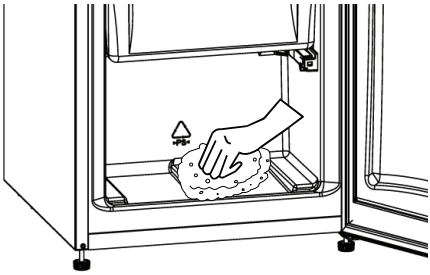

Replacing the light bulb

To replace the bulb in the fridge compartments;

1. Unplug your fridge freezer.
2. Using a screwdriver, carefully remove the light cover from the top panel. (a)
3. Replace with a 15 watt bulb. (b)
4. Reinstall the light cover. (c)
5. Wait for 5 minutes before re-plugging the fridge in and restore the thermostat to its original position.

Replacing LED lighting

If your refrigerator has LED lighting contact the help desk as this should be changed by authorized personnel only.

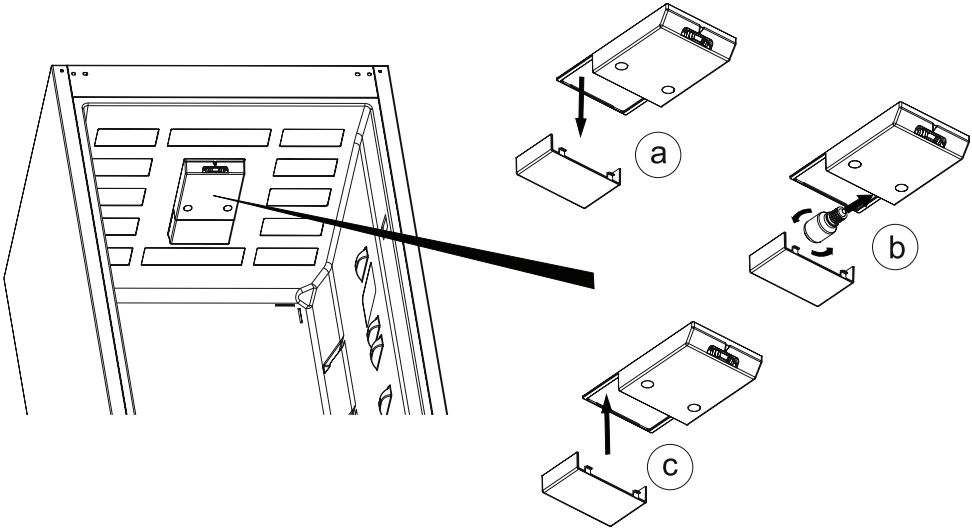

PART - 5. SHIPMENT AND REPOSITIONING

- The original packaging and foam may be kept for re-transportation (optionally).
- You should fasten your fridge with thick packaging, bands or strong cords and follow the instructions for transportation on the package for re-transportation.
- Remove movable parts (shelves, accessories, vegetable bins etc.) or fix them into the fridge against shocks using bands during re-positioning and transportation.
- Carry your fridge in the upright position.

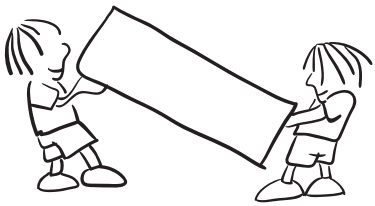

PART - 6. BEFORE CALLING FOR AFTER SALES SERVICE

If your refrigerator is not working properly, it may be a minor problem, therefore check the following.

The appliance does not operate,
Check if;

- There is a power failure,
- The mains plug is not properly plugged in, or is loose
- The thermostat setting is on position "•",
- The socket is defective. To check this, plug in another appliance that you know which is working into the same socket.

The appliance performs poorly;
Check if;

- You have overloaded the appliance,
- The doors are not closed perfectly,
- There are not enough ventilation ducts on the kitchen unit as mentioned in the Installation Manual.

If there is noise;

The cooling gas which circulates in the refrigerator circuit may make a slight noise (bubbling sound) even when the compressor is not running. Do not worry, this is quite normal. If these sounds are different check if;

- The appliance is installed firmly as described in the installation manual.
- The objects on the appliance are vibrating.

If there is water in the lower part of the refrigerator;
Check if;

The drain hole for defrost water is not clogged (use defrost drain plug to clean the drain hole).

IMPORTANT NOTES:

- In case of a sudden power loss or disconnecting and reconnecting of the plug to the electrical socket, the compressor protective thermal element will be opened as the pressure of the gas in the cooling system of your refrigerator has not yet been balanced. 4 or 5 minutes later, your refrigerator will start to operate; this is normal.

- If you won't be using your refrigerator for a long time (such as on summer holidays), please disconnect the plug from the socket. Clean your refrigerator as per Part 4 of this document and leave the door open to prevent any humidification or odor formation.
- If there is still a problem with your refrigerator although you have followed the instructions in this book, please consult your nearest authorized service center.

Energy Saving

- For better energy saving we suggest :
- Installing tge appliance away from heat sources and not exposed to direct sunlight and in a well ventilated roo.
- Avoid putting hot food into the refrigerator to avoid increasing the internal temperature and therefore causing continuos functionaliting of the compressor.
- Do not excessively stuff foods so as to ensure proper air circulation.
- Defrost the appliance in case there is ice to facilitate the transfer of cold.
- In case of absence of electrical energy, it is advisable to keep the refrigerator door closed.
- Open or keep the doors of the appliance open as little as possible
- Avoid adjusting the setting to temperatures too cold.

PART - 7. PARTS OF THE APPLIANCE AND THE COMPARTMENTS

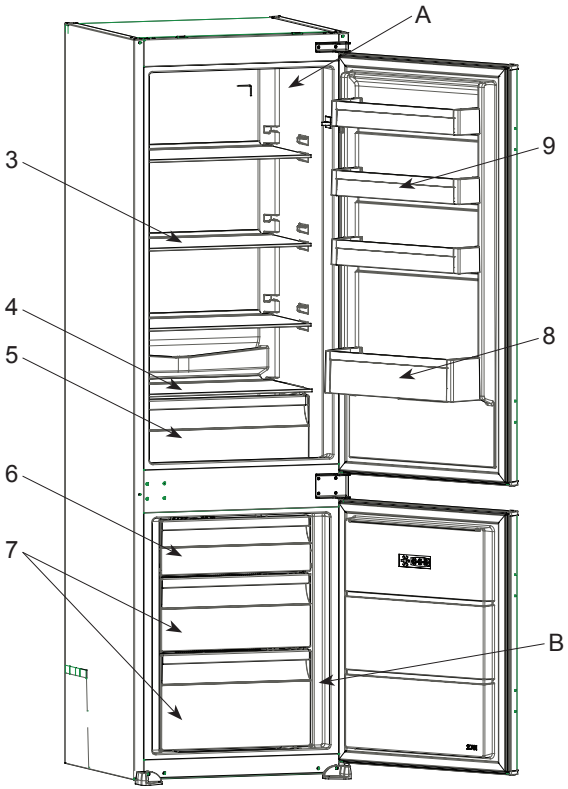

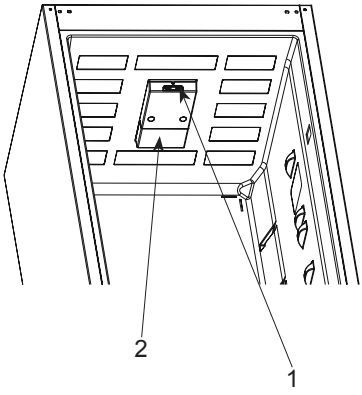

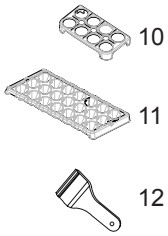

This presentation is only for information about the parts of the appliance.
Parts may vary according to the appliance model.

A) Refrigerator compartment
B) Freezer compartment

1) Thermostat knob
2) Refrigerator lamp & cover
3) Refrigerator shelves
4) Crispers cover
5) Crisper
6) Freezer room cover
7) Freezer comp. drawers
8) Bottle shelf
9) Door shelves
10) Egg holder
11) Ice tray
12) Plastic ice blade *

* In some models

SCRAPPING OLD APPLIANCES





This appliance is marked according to the European directive 2012/19/EU on Waste Electrical and Electronic Equipment (WEEE).

WEEE contains both polluting substances (which can cause negative consequences for the environment) and basic components (which can be re-used). It is important to have WEEE subjected to specific treatments, in order to remove and dispose properly all pollutants, and recover and recycle all materials.

Individuals can play an important role in ensuring that WEEE does not become an environmental issue; it is essential to follow some basic rules:

- WEEE should not be treated as household waste;
- WEEE should be handed over to the relevant collection points managed by the municipality or by registered companies. In many countries, for large WEEE, home collection could be present.

In many countries, when you buy a new appliance, the old one may be returned to the retailer who has to collect it free of charge on a one-to-one basis, as long as the equipment is of equivalent type and has the same functions as the supplied equipment.

Conformity

By placing the CE mark on this product, we are confirming compliance to all relevantEuropean safety, health and environmental requirements which are applicable inlegislation for this product.