by Schneider Electric

User Manual Easy UPS On-Line SRV Series 1000VA, 2000VA, 3000VA

Important Safety Information

Read the instructions carefully and look at the equipment to become familiar with the device before trying to install, operate, service or maintain it. The following special messages may appear throughout this document or on the equipment to warn of potential hazards or to call attention to information that clarifies or simplifies a procedure.



The addition of this symbol to a Danger or Warning product safety label indicates that an electrical hazard exists that will result in personal injury if the instructions are not followed.



This is the safety alert symbol. It is used to alert you to potential personal injury hazards. Obey all safety messages that follow this symbol to avoid possible injury or death.

⚠ DANGER

DANGER indicates a hazardous situation which, if not avoided, will result in death or serious injury.

⚠ WARNING

WARNING indicates a hazardous situation which, if not avoided, could result in death or serious injury.

⚠ CAUTION

CAUTION indicates a hazardous situation which, if not avoided, could result in minor or moderate injury.

NOTICE

NOTICE is used to address practices not related to physical injury.

Safety and General Information

SAVE THESE INSTRUCTIONS –

This manual contains important instructions that should be followed during installation and maintenance of the UPS and batteries.

Inspect the package contents upon receipt. Notify the carrier and dealer if there is any damages.

- This UPS is for indoor use only.
- Do not operate this UPS in direct sunlight, in contact with fluids, or where there is excessive dust or high humidity.
- Do not operate the UPS near open windows or doors.
- Be sure the air vents on the UPS are not blocked. Allow adequate space for proper ventilation.

  Note: Allow a minimum of 20 cm clearance on all four sides of the UPS.
- Environmental factors impact battery life. Elevated ambient temperatures, poor quality utility power, and frequent discharges will shorten battery life. Follow the battery manufacturer recommendations.
- Connect the UPS power cable directly to a wall outlet. Do not use surge protectors or extension cords.

Electrical Safety

- When grounding cannot be verified, disconnect the equipment from the utility power outlet before installing or connecting to other equipment. Reconnect the power cord only after all connections are made.
- Connection to the branch circuit (mains) must be performed by a qualified electrician.
- The protective earth conductor for the UPS carries the leakage current from the load devices (computer equipment). An insulated ground conductor is to be installed as part of the branch circuit that supplies the UPS. The conductor must have the same size and insulation material as the grounded and ungrounded branch circuit supply conductors. The conductor will be green and with or without a yellow stripe.
- The grounding conductor is to be grounded to earth at the service equipment, or if supplied by a separately derived system, at the supply transformer or motor generator set.

Battery Safety

⚠ CAUTION

HYDROGEN SULPHIDE GAS AND EXCESSIVE SMOKE

- Battery must be replaced when they reach end of service life.
- Batteries must be replaced when the unit indicates battery replacement is necessary.
- When replacing batteries, replace with the same number and type of batteries originally installed in the unit.

Failure to follow these instructions can result in minor or moderate injury and equipment damage.

- Do not dispose of batteries in a fire. The batteries may explode.
- Do not open or mutilate batteries. Released electrolyte is harmful to the skin and eyes, and may be toxic.
- Servicing of batteries should be performed or supervised by personnel knowledgeable about batteries and required precautions.
- APC by Schneider Electric uses Maintenance-Free sealed Lead Acid batteries. Under normal use and handling, there is no contact with the internal components of the batteries. Over charging, over heating or other misuse of batteries can result in a discharge of battery electrolyte. Released electrolyte is toxic and may be harmful to the skin and eyes.
- CAUTION: Before replacing batteries, remove conductive jewelry such as chains, wrist watches, and rings. High energy through conductive materials could cause severe burns.

Radio Frequency Warning

This equipment has been tested and found to comply with the limits for a Class A digital device, pursuant to part 15 of the FCC Rules. These limits are designed to provide reasonable protection against harmful interference when the equipment is operated in a commercial environment. This equipment generates, uses, and can radiate radio frequency energy and, if not installed and used in accordance with the instruction manual, may cause harmful interference to communications. Operation of this equipment in a residential area is likely to cause harmful interference in which case the user will be required to correct the interference at his own expense.

Product Description

The APC by Schneider Electric Easy UPS is a high performance, uninterruptible power supply (UPS). The UPS provides protection for electronic equipment from utility power blackouts, brownouts, sags, and surges and small utility fluctuations and large disturbances. The UPS also provides battery backup power for connected equipment until utility power returns to normal levels or the batteries are fully discharged.

This user manual is available on the enclosed Documentation CD and on the APC by Schneider Electric website, www.apc.com.

Package Contents

Read the Safety Guide before installing the UPS.

The packaging is recyclable; save it for reuse or dispose of it properly.

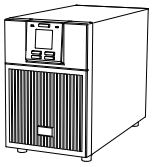

(1)
UPS



(1)
User manual



(1)
Software, User documentation CD

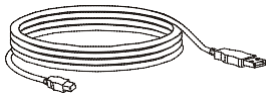

(1)
USB cable

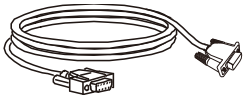

(1)
RS-232 cable

NOTE: The model and serial numbers are located on a small, top cover label.

Optional Accessories

For optional accessories, refer to the APC by Schneider Electric Website at www.apc.com.

Specifications

Environment Specifications

NOTICE

RISK OF EQUIPMENT DAMAGE

- UPS must be used indoors only.
- The installation location should be sturdy to withstand the weight of the UPS.
- Do not operate UPS where there is excessive dust or where the temperature or humidity are outside specified limits.

Failure to follow these instructions can result in equipment damage.

Temperature	**Operating**	0° to 40°C at rated load. 40° to 50°C linearly derated to 80% of maximum load capacity.	This unit is intended for indoor use only. Select a location sturdy enough to handle the weight. Do not operate UPS where there is excessive dust or where the temperature or humidity are outside specified limits. **Note:** Charge the battery modules every six months during storage.
	Storage	-20° to 50°C	
Elevation	**Operating**	0 - 1,000 m: normal operation 1,000 - 3,000 m: The load reduces @ 1% at an increased height of every 100 m > 3,000 m: UPS will not work	
	Storage	0 - 15,000 m	
Humidity		0 to 95% relative humidity, non-condensing	

Physical Specifications

UPS model	**SRV 1000VA**	**SRV 2000VA**	**SRV 3000VA**
Dimensions with package Width x Height x Depth	235 mm (9.25in) x 330 mm (12.99in) x 365 mm (14.37 in)	235 mm (9.25in) x 355 mm (13.98in) x 525 mm (20.67 in)	325 mm (12.8 in) x 465 mm (18.31 in) x 565 mm (22.24 in)
Dimensions without package Width x Height x Depth	145 mm (5.7 in) x 223 mm (8.78 in) x 288 mm (11.34 in)	145 mm (5.7 in) x 238mm (9.37in) x 400 mm (15.75 in)	190 mm (7.5 in) x 336 mm (13.2in) x 425 mm (16.7 in)
Weight with package	10.9kg	18.9kg	28kg
Weight without package	9.6kg	17kg	26kg
Lifting guidelines	< 18 kg (< 40 lb) 	18 - 32 kg (40 - 70lb) 	18 - 32 kg (40 - 70lb) 

Input/Output Specifications

UPS Model		SRV 1000VA	SRV 2000VA	SRV 3000VA
Input	Voltage	120 Vac Nominal		
	Frequency	40 – 70 Hz		
	Input Voltage Range (100% load)	85 Vac – 150 Vac		
	Input Voltage Range (50% load)	55 Vac – 150Vac		
	Input Power Factor (100% resistive load)	≥ 0.99 in Green mode ≥ 0.93 in Normal mode		
	Input Protection	Input circuit breaker		
Output	UPS Capacity	1000 VA / 800 W	2000 VA / 1600 W	3000 VA / 2400 W
	Nominal Output Voltage	120 Vac		
	Other Programmable Voltage	110 Vac, 115 Vac		
	Efficiency at rated load	88% max.		
	Output Voltage Regulation	± 1% static		
	Output Voltage Distortion	• 3% max. for full linear load, • 6% max. for full RCD load (100% VA, 0.8 PF) • 15% for the last 60 seconds of the backup time (with full load only for the internal battery)		
	Frequency – On Battery	50 Hz ± 0.5% or 60 Hz ± 0.5%		
	Frequency – AC Mode	50 Hz ± 3 Hz or 60 Hz ± 3 Hz		
	Crest Factor	3:1		
	Waveform	Sinewave		
	Output Connection	Please refer to rear panel features		
	Bypass	Internal bypass		

Battery

UPS Model	SRV 1000VA	SRV 2000VA	SRV 3000VA
Configuration	Internal battery		
Type	Sealed maintenance free (SMF) 12 V, 9 Ah		
Battery Bank Voltage	24 V	48 V	72 V

Front Panel Display

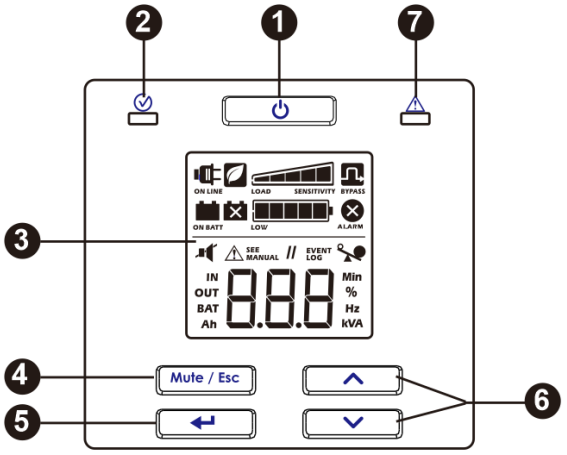

1. UPS Power On/Off button
2. Status LED
3. LCD Display
4. Mute/Esc button
5. Enter button
6. Up / Down button
7. Alarm LED

Rear Panel Features

SRV 1000VA

Model	Output type and quantity
SRV1KA	 x 4

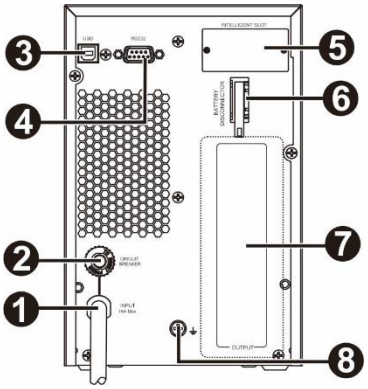

1	AC input	5	Intelligent card slot
2	Input circuit breaker	6	Battery disconnector
3	USB port	7	Outlet Group (refer to outlet type and quantity in the left side)
4	RS-232	8	Ground Screw

SRV 2000VA

Model	Output type and quantity
SRV2KA	 x4

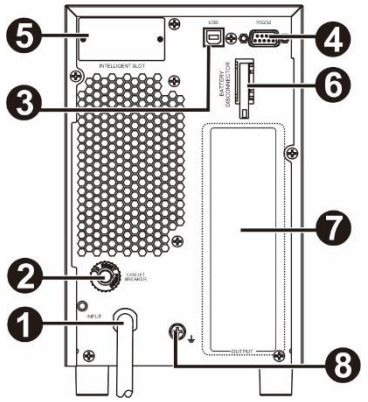

1	AC input	5	Intelligent card slot
2	Input circuit breaker	6	Battery disconnector
3	USB port	7	Outlet Group (refer to outlet type and quantity in the left side)
4	RS-232	8	Ground Screw

SRV 3000VA

Model	Output type and quantity
SRV3KA	x 4
	x 1

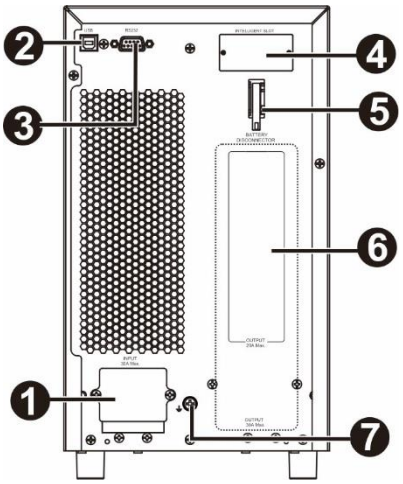

1	AC input	5	Battery disconnector
2	USB port	6	Outlet Group (refer to outlet type and quantity in the left side)
3	RS-232	7	Ground Screw
4	Intelligent card slot		

Basic Connectors

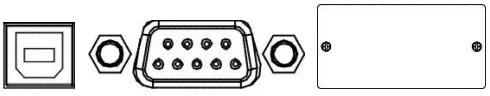

USB **Serial port** **Intelligent slot card**

Power management software and interface kits can be used with the UPS.
Use only interface kits supplied or approved by Schneider Electric.

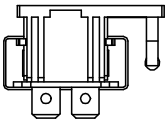

Battery disconnector

This UPS is equipped internal battery. For batteries without connecting when the UPS is shipped out from factory. Before turn on the UPS. Please connect the battery by pulling the handle up, and then pushing it into the unit.

Start Up Settings

Connect the battery

Connect the battery by pulling the battery handle up, and then pushing it into the unit.

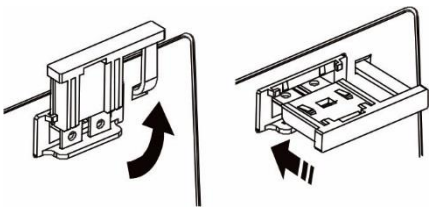

Connect power and equipment to the UPS

⚠ CAUTION

HAZARD OF ELECTRIC SHOCK

- All electrical work must be performed by a qualified electrician.
- Turn off all power to this equipment before working on the equipment. Practice lockout/tagout procedures.
- Do not wear jewelry when working with electrical equipment.

Failure to follow these instructions can result in minor or moderate injury.

1. Connect equipment to the UPS. Avoid using extension cords.
2. Connect input utility power to the UPS.
3. Switch on the input utility power. Then, the UPS display panel will illuminate when utility power is available.

Start the UPS

Press the ⏻ button located on the front panel of the UPS.

- The battery charges to 90% capacity during the first five hours of normal operation.
- ***Do not*** expect full battery run capability during this initial charge period.

Cold start the UPS

Use cold start feature to supply power to connected equipment from the UPS batteries.
Press the ⏻ button. Then, the display panel will illuminate. Press the ⏻ button again to supply battery power to the connected equipment.

Connect and install management software

Easy UPS SRV is provided with SchneiderUPS management software for unattended operating system shutdown, UPS monitoring, UPS control and energy reporting. The following diagram is a representation of a typical server installation.

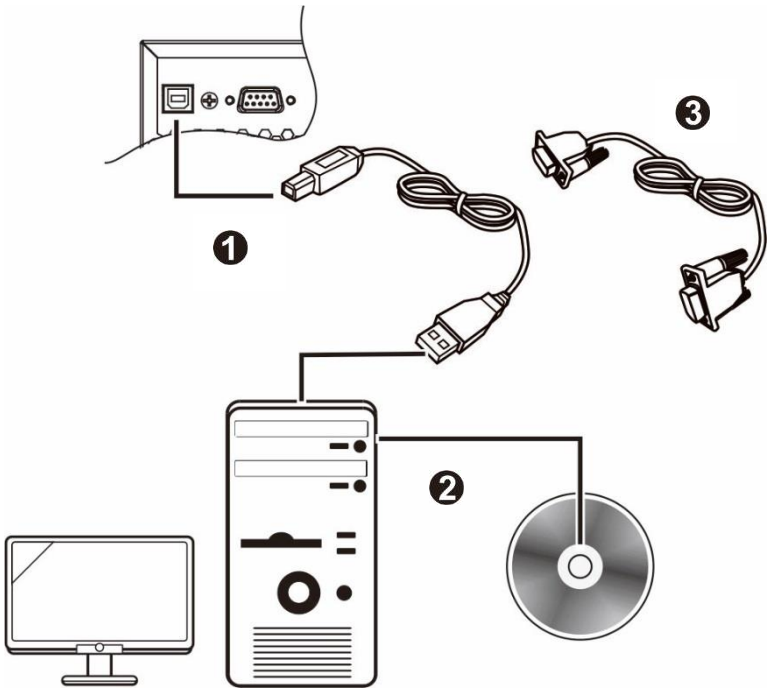

1. Connect the USB cable from the rear of the UPS  to the protected device such as a server.

2. For a server or other device with an operating system, load the SchneiderUPS CD and follow the on-screen set-up instructions.

3. A built-in serial port 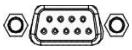 is also available for additional communication options with serial cable.

4. Even more communication options are available via the built-in intelligent card slot. Refer to www.apc.com for more information.

Operation

Using The Display

These Easy UPS models are equipped with an intuitive and configurable LCD display. This display complements the software interface as they convey similar information and either may be used to configure the UPS settings.
The display consists of the following keys and indicators:

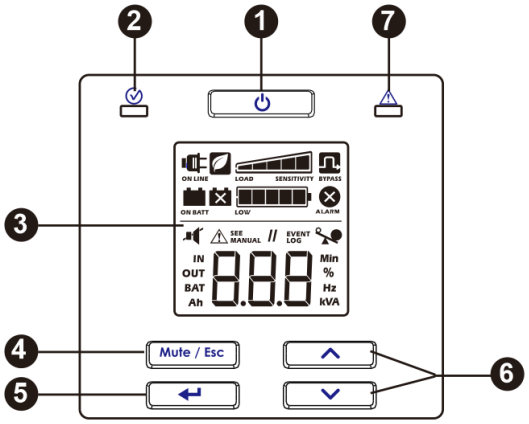

❶	UPS Power On/Off button 	• Press this button to turn on the UPS. • Press and hold this button until a beep is heard to turn off the UPS. • Press this button to reset alarms.
❷	Status LED 	The **Status LED** illuminates green when the power is on. This LED indicates two different states of output power: • **Output off**: LED blinks. Press Power On/Off button to turn the output power on. • **Output on**: LED illuminates green continuously.
❸	LCD Display	The display interface options are visible on this LCD screen. Press the  or 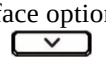 button to activate LCD, if the display is not illuminated.
❹	Mute/Esc button 	• To acknowledge audible alarms and suppress them temporarily. • To exit a sub menu and return to the main menu.
❺	Enter button 	Press this button to enter the menu or to select a menu item/ value during navigation.
❻	Up / Down button 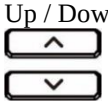	Press these two buttons to scroll through the main menu options and display screens.
❼	Alarm LED 	This Alarm **LED** illuminates red when the UPS detects an error and blinks red for UPS notifications. See " Alarms and Notifications" on page 11 in this manual.

LCD Display Icons

	**On Line:** The UPS is drawing utility power and performing double conversion to supply power to the connected equipment.
	**On Battery:** The UPS is supplying battery backup power to the connected equipment.
	**Replace Battery:** The battery is not connected securely or the battery is nearing the end of its service life and should be replaced.
	**Bypass**: The UPS is in bypass mode, sending utility power directly to connected equipment. Bypass mode operation is the result of an internal UPS event or an overload condition. Battery operation is not available while the UPS is in bypass mode. See "Alarms and Notifications" on page 11 in this manual. This icon in combination with Green Mode icon, indicates that the UPS is in green mode operation.
	**System Alarms:** An internal fault is detected. See "Alarms and Notifications" on page 11 in this manual.
	**Overload:** The equipment connected to the UPS is drawing more power than rated.
	**Battery Charge:** The battery charge level is indicated by the number of bar sections illuminated. When all five blocks are illuminated, the battery is fully charged. Each bar represents approximately 20% of the battery charge capacity.
	**Load Level:** The load percentage is indicated by the number of load bar sections illuminated. Each bar represents approximately 20% of the maximum load capacity.
	**Mute:** An illuminated line through the icon indicates that the audible alarm is disabled.

	**Green Mode**: An illuminated icon indicates that the unit is working in Green mode. The connected equipment is receiving the utility input directly as long as the input voltage and frequency are within the configured limits.
	**Alarm or notification:** The UPS has detected an error or the UPS is in configuration mode. See "Alarms and Notifications" on page 11 in this manual.
	**Event:** The icon is illuminated when the user is viewing the event log.

Alarms and System Errors

Status Indicators

Continuous beeps, every half second	**Low Battery State** - The battery is nearing its complete discharge state. The UPS is about to shut down.
	Overload condition - The equipment connected to the UPS is drawing more power than rated.
4 beeps every 30 sec (first beep starts after 4 sec on battery)	**On Battery State** - The UPS is supplying battery backup power to the connected equipment.
Beeper continuously on	**Alarm State** - UPS has detected an error. See "Alarms and Notifications" in this manual.
Short beep every 2.5 sec	Battery disconnected.
Continuous short beeps for every half second for 1 minute, repeats every 5 hours.	Bad battery (replace)
Two short beeps every 5 sec	**Event Bypass State** - UPS has detected an error. Connected equipment receives utility input power through the bypass relay.

Alarms

Display code	Description	Solution
	UPS has experienced a short circuit at the output. Unit will try to auto-recover from this condition.	Check if there is any short circuit at the UPS output. Remove the short circuit wait the unit auto-recover or Press  button to start the UPS. **Note:** The power supplied to the connected equipment is dropped when the UPS is in this condition.
	UPS is experiencing an overload condition.	Disconnect nonessential equipment from the UPS to eliminate the overload condition.
	The UPS has detected a DC voltage error. Unit will try to auto-recover from this condition.	If the UPS does not recover automatically, contact APC by Schneider Electric.
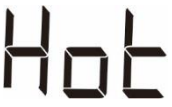	Temperature of the unit is rising above the set limits.	Disconnect nonessential equipment from the UPS to reduce the UPS load. Ensure that ambient temperature is within limits. Ensure that adequate clearance is maintained.
	UPS has detected a charger error.	Verify if there is any short circuit at the UPS battery terminal. Press 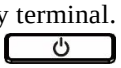 button to start the UPS.

Contact APC by Schneider Electric for all other alarm codes.

Notifications

Display code	Description	Solution
	Battery is not connected.	Connect battery to the UPS. See “Start Up” on page 8 in this manual.

UPS Display Parameters

Operational data displayed in the display panel is given in the table.

Navigate using the ^ or v button.

Parameter	Units	Indicator Icons
Output voltage	Vac	OUT, V
Output frequency	Hz	OUT, Hz
Input voltage	Vac	IN, V
Input frequency	Hz	IN, Hz
Battery voltage	V DC	BAT, V
Ambient temperature	° C	NUMBER, C
State of battery charge	%	BAT, %
Load level in percentage (Maximum of Watts or VA)	%	OUT, %
Load level in kVA	kVA	OUT, kVA
Total Ah capacity of connected battery	Ah	BAT, Ah
Remaining On Battery runtime	Minutes	BAT, Min

Configuration

Configure UPS Parameters

Follow the steps to configure parameters in the UPS:

1. Press the ↵ button.
2. Press the ^ or v button to navigate to “Set”.
3. Press the ↵ button.
4. Navigate through the parameters using the ^ or v button.
5. Press the ↵ button to edit a parameter. Icons start flashing to indicate the editing.
6. Press the ^ or v button to navigate between the options available for the selected parameter.
7. Press the ↵ button to select the option or Mute / Esc button to abort the editing of current parameter. Flashing of icons stops after this.
8. Press the ^ or v button to navigate between parameters.
9. Press the Mute / Esc button to exit menu navigation.

UPS Settings

Configure UPS settings using the display interface. See "Configure UPS parameters" section to edit the parameters.

Function	Factory Default	User Selectable Options	Description
Output voltage	120 Vac	110, 115, 120 Vac	Allows the user to select output voltage while the UPS is operating online.
Audible alarm	Enable	Enable, disable	UPS will mute audible alarms when setting to **disable** or when the display panel MUTE button is pressed.
Green mode/ high efficiency mode	Disabled	Enable/Disable	When this mode is enabled, connected equipment receives utility input power through the bypass relay as long as input voltage is within the range of ±5% of configured output voltage and ± 3 Hz of configured output frequency. Inverter is turned off during this mode. If utility power input goes out of range, inverter is turned on. The load is transferred to online mode or battery mode. The power to the connected equipment may be interrupted up to 10 milliseconds.
Minimum battery capacity to restart setting	0%	0%, 15%,50%,90%,	UPS output will not be turned on until the battery is charged to a level such that it can provide the runtime configured by this setting. If configured to 0%, UPS output is turned on immediately after utility power returns.
Low battery state indication setting	2 min	2 min, 5 min, 7min, 10min,	The UPS will emit audible alarm when the actual run time reaches the limit set by the end user. The audible alarm will emit only when the UPS is working in battery mode.

Advance Display Navigation

There are five options in main menu and two sub-menu options in UPS display. Press the ↵ button from the Home Screen to access these menu options. Use the ^ or v button to navigate between the menu options.

Menu Option	Description
	**Configure the UPS** Use this menu option to configure the UPS parameters. Press the ↵ button to see the configuration options. See "Configure UPS parameters" on page 13 for details. Press the Mute / Esc button to return to the Home Screen.
	**Show Event Log** Use this menu option to see the UPS event log. The UPS records the last 10 events and displays the codes in this log. Press the ↵ button to see the log. Use the ^ or v button to see the logged events. The v button navigates towards old events and the ^ button navigates to new events. Every log entry has a numeric and textual event code. At the end of the log, the word "End" will be displayed. Press the Mute / Esc button to return to the Home Screen.
	**Show UPS information** Use this menu option to see the UPS information. Press the ↵ button to see the rating of the UPS. Press the ^ button to see the UPS firmware version. Press the Mute / Esc button to return to the Home Screen.
	**User Command to bypass** Use this menu option to switch the UPS to bypass mode or bring the UPS to online mode from bypass mode. Press ↵ button:  **Put:** Use to switch the UPS to bypass mode of operation. **Note:** Power to the connected equipment will drop, if the mains voltage is not within the threshold limits.  **Out:** Bring the UPS out of bypass and restore clean power to the connected equipment.
	**Execute Battery Self-Test** Use this menu option to conduct a self-test and determine the battery status. Press the ↵ button to initiate the test. If the test command is accepted, the UPS will initiate a self-test and will start a count down on the display. Display messages are shown at the end of the test.  Test refused. The output is off or battery is not charged.  Test not passed  Test passed  Test is aborted due to internal reasons Press the Mute / Esc button to return to the Home Screen

Troubleshooting

Use the table below to solve minor installation and operation problems. Refer to the APC by Schneider Electric website, www.apc.com for assistance with complex UPS problems.

Problem and/or Possible Cause	Solution
UPS will not turn on when utility input is available or there is no power output	
The UPS is not turned on.	Press the ⏻ button to turn on the UPS.
The UPS is not connected to utility power supply.	Check that the power cable from the UPS to the utility power supply is securely connected at both ends. See "Start Up" on page 8 in this manual.
Input thermal circuit breaker on the UPS is tripped.	Press the input thermal circuit breaker reset button in the rear panel.
The UPS is operating on battery, while connected to the input utility power	
There is high, low, or distorted input voltage or frequency.	Connect the UPS to a different outlet on a different circuit. Test the utility input power to ensure the unit is receiving input power. If display is on, navigate and check the input voltage and frequency.
UPS, when connected to battery, is not supplying power to the connected equipment	
The UPS is not turned on.	If the UPS has shutdown (the display is not on), follow the procedure "Cold start the UPS" on page 8.
The battery is not connected.	Connect battery to the UPS. See "Start Up" on page 8 in this manual.
Low battery cut off. UPS may have discharged the battery due to utility power outage and turned the output off due to low battery condition.	Wait for the utility power to return and charge the battery. To turn on the output power after utility power returns, press ⏻ button.
UPS emits an audible beeping sound at long intervals	
The UPS is operating normally when running on battery.	UPS has detected an error. See "Alarms and Notifications" on page 11 in this manual.
Alarm LED is illuminated. The UPS displays an alarm message and emits a constant beeping sound	
The UPS has detected an error.	See "Alarms and Notifications" on page 11 in this manual.
No audible sounds from UPS even when the Alert LED is illuminated.	
Audible alarm is disabled.	Change the UPS configuration to enable audible alarms.
UPS is not providing expected backup time.	
The UPS battery is discharged due to a recent power outage.	The batteries require recharging after extended outages. Batteries can wear faster when put into service without proper recharging or when operated at elevated temperatures.
The battery is near the end of its service life.	If the battery is near the end of its service life, consider replacing the battery, even if the replace battery indicator is not illuminated. See "Start Up" on page 8 in this manual.

Problem and/or Possible Cause	Solution
UPS is not turning off	
POWER OFF button not pressed properly	Press and hold the ⏻ button until the beep is heard to power off the UPS.
Utility input power is available.	UPS logic power can not be turned off if utility input power is available. To turn off the UPS, turn off utility input power and press ⏻ button. Release when a beep is heard.
UPS is in Bypass mode and the LED is not illuminated red.	
UPS is in green mode.	Disable green mode if not desired.
UPS is configured to stay in the bypass mode.	Change the configuration to exit bypass mode.
UPS is in bypass mode even after over temperature alarm is cleared.	Reduce the connected load to <90% to bring the UPS to online mode.
The UPS has experienced an overload condition and transferred to bypass.	Connected equipment exceeds the "maximum load" as defined in specifications on the APC by Schneider Electric Website, www.apc.com. The alarms remain on until the overload condition is corrected. Disconnect nonessential equipment from the UPS to eliminate the overload condition. The UPS continues to supply power as long as it is in bypass mode and the circuit breaker does not trip. The UPS will not provide battery power in the event of a utility voltage interruption.
UPS detected an error and transferred to bypass.	See "Alarms and Notifications" on page 11 in this manual.

Transport

1. Shut down and disconnect all connected equipment.
2. Disconnect the unit from mains power.
3. Disconnect all internal and external batteries (if applicable).
4. Follow the shipping instructions outlined in the *Service* section of this manual.

Service

If the unit requires service, do not return it to the dealer. Follow these steps:

1. Review the *Troubleshooting* section of the manual to eliminate common problems.
2. If the problem persists, contact APC by Schneider Electric Customer Support through the APC by Schneider Electric website, **www.apc.com**.
   a. Note the model number and serial number and the date of purchase. The model and serial numbers are located on the rear panel of the unit and are available through the LCD display on select models.
   b. Call Customer Support. A technician will attempt to solve the problem over the phone. If this is not possible, the technician will issue a Returned Material Authorization Number (RMA#).
   c. If the unit is under warranty, the repairs are free.
   d. Service procedures and returns may vary internationally. For country specific instructions refer to the APC by Schneider Electric website, **www.apc.com**.
3. Pack the unit properly to avoid damage in transit. Never use foam beads for packaging. Damage sustained in transit is not covered under warranty.
   Note: Before shipping, always disconnect battery modules in a UPS or external battery pack. The disconnected internal batteries may remain inside the UPS or external battery pack.
4. Write the RMA# provided by Customer Support on the outside of the package.
5. Return the unit by insured, prepaid carrier to the address provided by Customer Support.

Limited Factory Warranty

Schneider Electric IT Corporation (SEIT), warrants its products to be free from defects in materials and workmanship for a period of two (2) years from the date of purchase. The SEIT obligation under this warranty is limited to repairing or replacing, at its own sole option, any such defective products. Repair or replacement of a defective product or part thereof does not extend the original warranty period.

This warranty applies only to the original purchaser who must have properly registered the product within 10 days of purchase. Products may be registered online at warranty.apc.com.

SEIT shall not be liable under the warranty if its testing and examination disclose that the alleged defect in the product does not exist or was caused by end user or any third person misuse, negligence, improper installation, testing, operation or use of the product contrary to SEIT recommendations of specifications. Further, SEIT shall not be liable for defects resulting from: 1) unauthorized attempts to repair or modify the product, 2) incorrect or inadequate electrical voltage or connection, 3) inappropriate on site operation conditions, 4) Acts of God, 5) exposure to the elements, or 6) theft. In no event shall SEIT have any liability under this warranty for any product where the serial number has been altered, defaced, or removed.

EXCEPT AS SET FORTH ABOVE, THERE ARE NO WARRANTIES, EXPRESS OR IMPLIED, BY OPERATION OF LAW OR OTHERWISE, APPLICABLE TO PRODUCTS SOLD, SERVICED OR FURNISHED UNDER THIS AGREEMENT OR IN CONNECTION HEREWITH.
SEIT DISCLAIMS ALL IMPLIED WARRANTIES OF MERCHANTABILITY, SATISFACTION AND FITNESS FOR A PARTICULAR PURPOSE.

SEIT EXPRESS WARRANTIES WILL NOT BE ENLARGED, DIMINISHED, OR AFFECTED BY AND NO OBLIGATION OR LIABILITY WILL ARISE OUT OF, SEIT RENDERING OF TECHNICAL OR OTHER ADVICE OR SERVICE IN CONNECTION WITH THE PRODUCTS.

THE FOREGOING WARRANTIES AND REMEDIES ARE EXCLUSIVE AND IN LIEU OF ALL OTHER WARRANTIES AND REMEDIES. THE WARRANTIES SET FORTH ABOVE CONSTITUTE SEIT'S SOLE LIABILITY AND PURCHASER EXCLUSIVE REMEDY FOR ANY BREACH OF SUCH WARRANTIES. SEIT WARRANTIES EXTEND ONLY TO ORIGINAL PURCHASER AND ARE NOT EXTENDED TO ANY THIRD PARTIES.

IN NO EVENT SHALL SEIT, ITS OFFICERS, DIRECTORS, AFFILIATES OR EMPLOYEES BE LIABLE FOR ANY FORM OF INDIRECT, SPECIAL, CONSEQUENTIAL OR PUNITIVE DAMAGES, ARISING OUT OF THE USE, SERVICE OR INSTALLATION OF THE PRODUCTS, WHETHER SUCH DAMAGES ARISE IN CONTRACT OR TORT, IRRESPECTIVE OF FAULT, NEGLIGENCE OR STRICT LIABILITY OR WHETHER SEIT HAS BEEN ADVISED IN ADVANCE OF THE POSSIBILITY OF SUCH DAMAGES. SPECIFICALLY, SEIT IS NOT LIABLE FOR ANY COSTS, SUCH AS LOST PROFITS OR REVENUE, WHETHER DIRECT OR INDIRECT, LOSS OF EQUIPMENT, LOSS OF USE OF EQUIPMENT, LOSS OF SOFTWARE, LOSS OF DATA, COSTS OF SUBSTITUANTS, CLAIMS BY THIRD PARTIES, OR OTHERWISE.

NOTHING IN THIS LIMITED WARRANTY SHALL SEEK TO EXCLUDE OR LIMIT SEIT LIABILITY FOR DEATH OR PERSONAL INJURY RESULTING FROM ITS NEGLIGENCE OR ITS FRAUDULENT MISREPRESENTATION OF TO THE EXTENT THAT IT CANNOT BE EXCLUDED OR LIMITED BY APPLICABLE LAW.

To obtain service under warranty you must obtain a Returned Material Authorization (RMA) number from customer support. Customers with warranty claims issues may access the SEIT worldwide customer support network through the APC by Schneider Electric website: **www.apc.com**. Select your country from the country selection drop down menu. Open the Support tab at the top of the web page to obtain information for customer support in your region. Products must be returned with transportation charges prepaid and must be accompanied by a brief description of the problem encountered and proof of date and place of purchase.

APC by Schneider Electric Worldwide Customer Support

Customer support for this or any other APC by Schneider Electric product is available at no charge in any of the following ways:

- Visit the APC by Schneider Electric website to access documents in the APC by Schneider Electric Knowledge Base and to submit customer support requests.
  - **www.apc.com** (Corporate Headquarters)
    Connect to localized APC by Schneider Electric websites for specific countries, each of which provides customer support information.
  - **www.apc.com/support/**
    Global support searching APC by Schneider Electric Knowledge Base and using e-support.
- Contact the APC by Schneider Electric Customer Support Center by telephone or e-mail.
  - Local, country specific centers: go to **www.apc.com/support/contact** for contact information.

For information on how to obtain local customer support, contact the APC by Schneider Electric representative or other distributor from whom you purchased your APC by Schneider Electric product.

© 2018 APC by Schneider Electric. APC, the APC logo are owned by Schneider Electric Industries S.A.S., or their affiliated companies. All other trademarks are property of their respective owners.

EN 990-91095
01/2018