SCE8191VTS
SCK8191VTS
SCE8192VTS

EN **User Manual**
Fridge Freezer

USER MANUAL

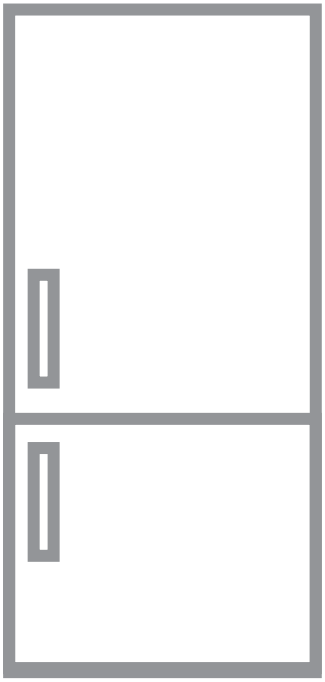

AEG

CONTENTS

1. SAFETY INFORMATION....2
2. SAFETY INSTRUCTIONS....4
3. OPERATION....6
4. DAILY USE....8
5. HINTS AND TIPS....10
6. CARE AND CLEANING....11
7. TROUBLESHOOTING....12
8. INSTALLATION....15
9. NOISES....16
10. TECHNICAL DATA....17

FOR PERFECT RESULTS

Thank you for choosing this AEG product. We have created it to give you impeccable performance for many years, with innovative technologies that help make life simpler features you might not find on ordinary appliances. Please spend a few minutes reading to get the very best from it.
Visit our website for:



Get usage advice, brochures, trouble shooter, service information:
www.aeg.com/webselfservice



Register your product for better service:
www.registeraeg.com



Buy Accessories, Consumables and Original spare parts for your appliance:
www.aeg.com/shop

CUSTOMER CARE AND SERVICE

Always use original spare parts.
When contacting our Authorised Service Centre, ensure that you have the following data available: Model, PNC, Serial Number.
The information can be found on the rating plate.

⚠ Warning / Caution-Safety information

ⓘ General information and tips

Environmental information

Subject to change without notice.

1. ⚠ SAFETY INFORMATION

Before the installation and use of the appliance, carefully read the supplied instructions. The manufacturer is not responsible for any injuries or damages that are the result of incorrect installation or

usage. Always keep the instructions in a safe and accessible location for future reference.

1.1 Children and vulnerable people safety

- This appliance can be used by children aged from 8 years and above and persons with reduced physical, sensory or mental capabilities or lack of experience and knowledge if they have been given supervision or instruction concerning the use of the appliance in a safe way and understand the hazards involved.
- This appliance may be used by children between 3 and 8 years of age and persons with very extensive and complex disabilities, if they have been properly instructed.
- Children of less than 3 years of age should be kept away unless continuously supervised.
- Do not let children play with the appliance.
- Children shall not carry out cleaning and user maintenance of the appliance without supervision.
- Keep all packaging away from children and dispose of it appropriately.

1.2 General Safety

- This appliance is intended to be used in household and similar applications such as:
  - Farm houses; staff kitchen areas in shops, offices and other working environments
  - By clients in hotels, motels, bed and breakfast and other residential type environments
- Keep ventilation openings, in the appliance enclosure or in the built-in structure, clear of obstruction.
- Do not use mechanical devices or other means to accelerate the defrosting process, other than those recommended by the manufacturer.
- Do not damage the refrigerant circuit.
- Do not use electrical appliances inside the food storage compartments of the appliance, unless they are of the type recommended by the manufacturer.

- Do not use water spray and steam to clean the appliance.
- Clean the appliance with a moist soft cloth. Only use neutral detergents. Do not use abrasive products, abrasive cleaning pads, solvents or metal objects.
- Do not store explosive substances such as aerosol cans with a flammable propellant in this appliance.
- If the supply cord is damaged, it must be replaced by the manufacturer, its Authorised Service Centre or similarly qualified persons in order to avoid a hazard.

2. SAFETY INSTRUCTIONS

2.1 Installation

WARNING!
Only a qualified person must install this appliance.

- Remove all the packaging and the transit bolts.
- Do not install or use a damaged appliance.
- Follow the installation instructions supplied with the appliance.
- Always take care when moving the appliance as it is heavy. Always use safety gloves and enclosed footwear.
- Make sure the air can circulate around the appliance.
- At first installation or after reversing the door wait at least 4 hours before connecting the appliance to the power supply. This is to allow the oil to flow back in the compressor.
- Before carrying out any operations on the appliance (e.g. reversing the door), remove the plug from the power socket.
- Do not install the appliance close to radiators or cookers, ovens or hobs.
- Do not install the appliance where there is direct sunlight.
- Do not install this appliance in areas that are too humid or too cold.
- When you move the appliance, lift it by the front edge to avoid scratching the floor.
- The appliance contains a bag of desiccant. This is not a toy. This is not food. Please dispose of it immediately.

2.2 Electrical connection

WARNING!
Risk of fire and electric shock.

- The appliance must be earthed.
- Make sure that the parameters on the rating plate are compatible with the electrical ratings of the mains power supply.
- Always use a correctly installed shockproof socket.
- Do not use multi-plug adapters and extension cables.
- Make sure not to cause damage to the electrical components (e.g. mains plug, mains cable, compressor). Contact the Authorised Service Centre or an electrician to change the electrical components.
- The mains cable must stay below the level of the mains plug.
- Connect the mains plug to the mains socket only at the end of the installation. Make sure that there is access to the mains plug after the installation.
- Do not pull the mains cable to disconnect the appliance. Always pull the mains plug.

2.3 Use

WARNING!
Risk of injury, burns, electric shock or fire.

- Do not change the specification of this appliance.
- Do not put electrical appliances (e.g. ice cream makers) in the appliance unless they are stated applicable by the manufacturer.
- Be careful not to cause damage to the refrigerant circuit. It contains isobutane (R600a), a natural gas with a high level of environmental compatibility. This gas is flammable.
- If damage occurs to the refrigerant circuit, make sure that there are no flames and sources of ignition in the room. Ventilate the room.
- Do not let hot items to touch the plastic parts of the appliance.
- Do not put soft drinks in the freezer compartment. This will create pressure on the drink container.
- Do not store flammable gas and liquid in the appliance.
- Do not put flammable products or items that are wet with flammable products in, near or on the appliance.
- Do not touch the compressor or the condenser. They are hot.
- Do not remove or touch items from the freezer compartment if your hands are wet or damp.
- Do not freeze again food that has been thawed.
- Obey the storage instructions on the packaging of frozen food.

2.4 Internal lighting

WARNING!
Risk of electric shock.

- The type of lamp used for this appliance is for household appliances only. Do not use it for house lighting.

2.5 Care and cleaning

WARNING!
Risk of injury or damage to the appliance.

- Before maintenance, deactivate the appliance and disconnect the mains plug from the mains socket.
- This appliance contains hydrocarbons in the cooling unit. Only a qualified person must do the maintenance and the recharging of the unit.
- Regularly examine the drain of the appliance and if necessary, clean it. If the drain is blocked, defrosted water collects in the bottom of the appliance.

2.6 Service

- To repair the appliance contact an Authorised Service Centre.
- Use original spare parts only.

2.7 Disposal

WARNING!
Risk of injury or suffocation.

- Disconnect the appliance from the mains supply.
- Cut off the mains cable and discard it.
- Remove the door to prevent children and pets to be closed inside of the appliance.
- The refrigerant circuit and the insulation materials of this appliance are ozone-friendly.
- The insulation foam contains flammable gas. Contact your municipal authority for information on how to discard the appliance correctly.
- Do not cause damage to the part of the cooling unit that is near the heat exchanger.

3. OPERATION

3.1 Control panel

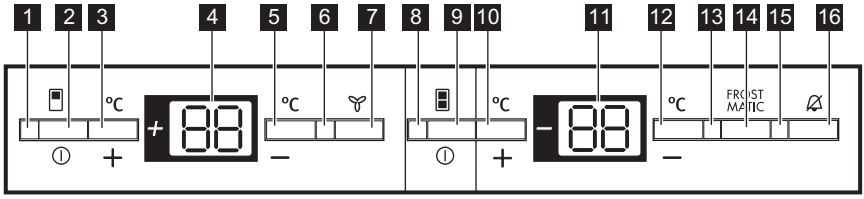

1. Fridge Pilot light
2. Fridge ON/OFF switch
3. Fridge temperature regulator /**+** button
4. Fridge temperature indicator
5. Fridge temperature regulator / **-** button
6. DYNAMICAIR indicator
7. DYNAMICAIR button
8. Appliance Pilot light
9. Appliance ON/OFF switch
10. Freezer temperature regulator / **+** button
11. Freezer temperature indicator
12. Freezer temperature regulator / **-** button
13. FROSTMATIC indicator
14. FROSTMATIC button
15. Alarm indicator
16. Alarm reset button

3.2 Switching on

1. Insert the plug into the wall socket.
2. Press the ON/OFF switch.
The Pilot light will light up.
The alarm indicator light flashes since the temperature is reached. The acoustic alarm sounds.
3. Press the alarm reset to reset the alarm.

3.3 Switching off

To switch off fridge or appliance reaped the procedure:

1. Press ON/OFF for 5 seconds.
2. Countdown from -3-2-1 will shown. When -1- appears the fridge / appliance is turned off. The temperature indicators and Pilot light switch off.

3.4 Temperature regulation

The temperature is adjusted using the temperature setting buttons. These buttons are connected to the temperature indicator.

To operate the appliance, proceed as follows:

- Set the temperature by pressing temperature regulator.
  The temperature indicators will shown the changed setting and temperature indicator flashes.
- Each time by pressing the temperature regulator the temperature rise by 1°C.

The set temperature will be reached within 24 hours. The temperature indicator will illuminate.

For correct storage of the foodstuff following temperatures should be set:

- fridge : +5°C
- freezer : -18 °C

When the setting is changed the compressor does not start immediately if automatic defrosting is currently taking place. As the storage temperature in the fridge is reached quickly store food immediately after switching on.

3.5 Temperature indicators

The temperature indicators show several information:

- During normal operating the temperature set for fridge and freezer are displayed;
- During adjusting temperature flashing display indicates the fridge or freezer current set.

3.6 Temperature setting buttons

The temperature is adjusted using the temperature setting buttons. These buttons are connected to the temperature indicator.

Press on of the two temperature setting buttons is to adjust the temperature 1°C increments.
The set temperature will be reached within 24 hours.

3.7 High temperature alarm

Temperature increase in the freezer compartment (for example due to an earlier power failure) is indicated by:

- alarm light flashing.
- sound of a buzzer.

1. Switch off the buzzer by pressing the alarm reset button. Alarm indicator light will flash.
2. Press alarm reset button.
   The alarm indicator light is off, at the same time freezer temperature indicator shows the warmest temperature reached in the freezer compartment for 5 seconds.

When normal conditions are restored, the alarm stops flashing and the buzzer turns off automatically.

3.8 COOLMATIC function

The COOLMATIC function is suitable for quick cooling of large quantities of goods in the refrigerator.

To activate the function:
- Press the fridge temperature **-** button (several times if necessary) until the word **SC** appears in the display.
  A temperature of +2°C is automatically selected.

To deactivate the function:
- Press the fridge temperature **+** button .

The COOLMATIC function stops automatically after about 6 hours.

If the COOLMATIC function is switched on the temperature setting may not be changed.

3.9 FROSTMATIC function

The FROSTMATIC function accelerates the freezing of fresh food and, at the same time, protects foodstuffs already stored from undesirable warming.

To switch on the fuction:
- Press the FROSTMATIC button.
  The FROSTMATIC indicator will light up.

To switch off the function before its automatic end, repeat the steps until FROSTMATIC indicator goes off.

The FROSTMATIC function stops automatically after about 52 hours.

If the FROSTMATIC function is switched on the temperature setting may not be changed.

3.10 Holiday function

This function allows you to keep the refrigerator shut and empty during a

long holiday period without the formation of a bad smell.

The fridge compartment must be empty when the holiday function is on.

To activate the function:

- Press the temperature regulator (warmest) until the letter **H** (Holiday) appears on the temperature indicator. The Holiday function sets the temperature approximately +15°C.

The refrigerator is in the energy saving set.

To switch off the function press the fridge temperature regulator to set required temperature.

3.11 DYNAMICAIR function

To switch on the function:

- Press the DYNAMICAIR button. The DYNAMICAIR indicator is shown.

To switch off the function before its automatic end, repeat the steps until DYNAMICAIR indicator goes off.

If the function is activated automatically the DYNAMICAIR indicator is not shown (refer to "Daily use"). The activation of the DYNAMICAIR function increases the energy consumption.

4. DAILY USE

WARNING!
Refer to Safety chapters.

4.1 Cleaning the interior

Before using the appliance for the first time, the interior and all internal accessories should be washed with lukewarm water and some neutral soap to remove the typical smell of a brand-new product, then dried thoroughly.

CAUTION!
Do not use detergents, abrasive powders, chlorine or oil-based cleaners as they will damage the finish.

4.2 Positioning the door shelves

To permit storage of food packages of various sizes, the door shelves can be placed at different heights.

1. Gradually pull the shelf in the direction of the arrows until it comes free.
2. Reposition as required.

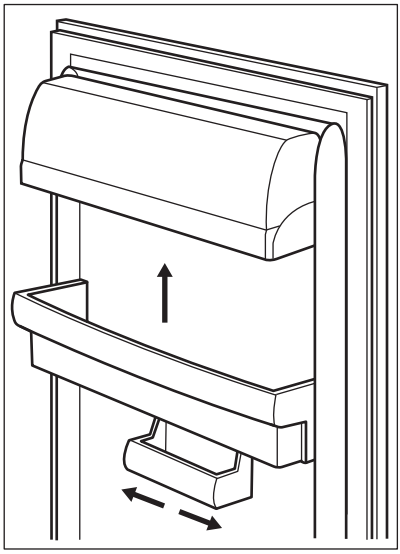

This model is equipped with a variable storage box which can be moved sideways.

4.3 Movable shelves

The walls of the refrigerator are equipped with a series of runners so that the shelves can be positioned as desired.

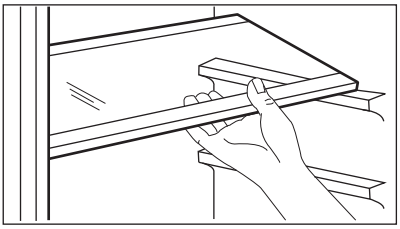

Do not move the glass shelf above the vegetable drawer to ensure correct air circulation.

4.4 DYNAMICAIR

The refrigerator compartment is equipped with a device that allows rapid cooling of food and keeps a more uniform temperature in the compartment.

This device activates automatically when needed, for example for a quick temperature recovery after door opening or when the ambient temperature is high.

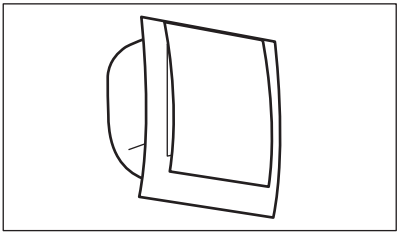

The DYNAMICAIR device stops when the door is open and restarts immediately after the door closing.

4.5 Freezing fresh food

The freezer compartment is suitable for freezing fresh food and storing frozen and deep-frozen food for a long time.

The maximum amount of food that can be frozen in 24 hours is specified on the **rating plate**, a label located on the inside of the appliance.

1. To freeze fresh food activate the FROSTMATIC function at least 24 hours before placing the food to be frozen in the freezer compartment.
2. Place the fresh food to be frozen in the upper compartment.

The freezing process lasts 24 hours: during this period do not add other food to be frozen.

4.6 Storage of frozen food

When first starting-up or after a period out of use, before putting the products in the compartment let the appliance run at least 2 hours on the higher settings.

WARNING!
In the event of accidental defrosting, for example due to a power failure, if the power has been off for longer than the value shown in the technical characteristics chart under "rising time", the defrosted food must be consumed quickly or cooked immediately and then re-frozen (after cooling).

4.7 Thawing

Deep-frozen or frozen food, prior to being used, can be thawed in the refrigerator compartment or at room temperature, depending on the time available for this operation.

Small pieces may even be cooked still frozen, directly from the freezer: in this case, cooking will take longer.

4.8 Ice-cube production

This appliance is equipped with one or more trays for the production of ice-cubes.

Do not use metallic instruments to remove the trays from the freezer.

1. Fill these trays with water
2. Put the ice trays in the freezer compartment.

4.9 Cold accumulators

The freezer contains at least one cold accumulator which increases storage time in the event of a power cut or breakdown.

5. HINTS AND TIPS

5.1 Normal operating sounds

The following sounds are normal during operation:

- A faint gurgling and bubbling sound from coils sound when refrigerant is pumped.
- A whirring and pulsating sound from the compressor when refrigerant is pumped.
- A sudden cracking noise from inside appliance caused by thermic dilatation (a natural and not dangerous physical phenomenon).
- A faint click noise from the temperature regulator when the compressor switches on or off.

5.2 Hints for energy saving

- Do not open the door frequently or leave it open longer than absolutely necessary.
- Do not remove the cold accumulators from the freezer basket.

5.3 Hints for fresh food refrigeration

To obtain the best performance:

- do not store warm food or evaporating liquids in the refrigerator
- do cover or wrap the food, particularly if it has a strong flavour
- position food so that air can circulate freely around it

5.4 Hints for refrigeration

Useful hints:

- Meat (all types): wrap in a suitable packaging and place it on the glass shelf above the vegetable drawer. Store meat for at most 1-2 days.
- Cooked foods, cold dishes: cover and place on any shelf.
- Fruit and vegetables: clean thoroughly and place in a special drawer. Bananas, potatoes, onions and garlic must not be kept in the refrigerator if not packed.
- Butter and cheese: place in a special airtight container or wrap in an aluminium foil or a polythene bag to exclude as much air as possible.
- Bottles: close with a cap and place on the door bottle shelf, or (if available) on the bottle rack.

5.5 Hints for freezing

To help you make the most of the freezing process, here are some important hints:

- the maximum quantity of food which can be frozen in 24 hours is shown on the rating plate;
- the freezing process takes 24 hours no further food to be frozen should be added during this period;
- freeze only top quality, fresh and thoroughly cleaned, foodstuffs;
- prepare food in small portions to enable it to be rapidly and completely frozen and to make it possible subsequently to thaw only the quantity required;
- wrap up the food in aluminium foil or polythene and make sure that the packages are airtight;
- do not allow fresh, unfrozen food to touch food which is already frozen, thus avoiding a rise in temperature of the latter;
- lean foods store better and longer than fatty ones; salt reduces the storage life of food;
- water ices, if consumed immediately after removal from the freezer compartment, can possibly cause the skin to be freeze burnt;
- it is advisable to show the freezing in date on each individual pack to enable you to keep tab of the storage time.

5.6 Hints for storage of frozen food

To obtain the best performance from this appliance, you should:

- make sure that the commercially frozen foodstuffs were adequately stored by the retailer;
- be sure that frozen foodstuffs are transferred from the foodstore to the freezer in the shortest possible time;
- not open the door frequently or leave it open longer than absolutely necessary;
- once defrosted, food deteriorates rapidly and cannot be refrozen;
- do not exceed the storage period indicated by the food manufacturer.

6. CARE AND CLEANING

WARNING!
Refer to Safety chapters.

6.1 General warnings

CAUTION!
Unplug the appliance before carrying out any maintenance operation.

This appliance contains hydrocarbons in its cooling unit; maintenance and recharging must therefore only be carried out by authorized technicians.

The accessories and parts of the appliance are not suitable for washing in a dishwasher.

6.2 Periodic cleaning

CAUTION!
Do not pull, move or damage any pipes and/or cables inside the cabinet.

CAUTION!
Take care of not to damage the cooling system.

CAUTION!
When moving the cabinet, lift it by the front edge to avoid scratching the floor.

The equipment has to be cleaned regularly:

1. Clean the inside and accessories with lukewarm water and some neutral soap.
2. Regularly check the door seals and wipe clean to ensure they are clean and free from debris.
3. Rinse and dry thoroughly.
4. If accessible, clean the condenser and the compressor at the back of the appliance with a brush.
   This operation will improve the performance of the appliance and save electricity consumption.

6.3 Defrosting of the refrigerator

Frost is automatically eliminated from the evaporator of the refrigerator compartment every time the motor compressor stops, during normal use. The defrost water drains out through a trough into a special container at the back of the appliance, over the motor compressor, where it evaporates.

It is important to periodically clean the defrost water drain hole in the middle of the refrigerator compartment channel to prevent the water overflowing and dripping onto the food inside.

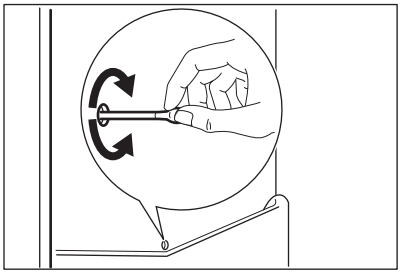

6.4 Defrosting of the freezer

The freezer compartment is frost free. This means that there is no build up of frost when it is in operation, neither on the internal walls, nor on the foods.

6.5 Periods of non-operation

When the appliance is not in use for long periods, take the following precautions:

1. Disconnect the appliance from electricity supply.
2. Remove all food.
3. Clean the appliance and all accessories.
4. Leave the door/doors open to prevent unpleasant smells.

WARNING!
If you want to keep the appliance switched on, ask somebody to check it once in a while to prevent the food inside from spoiling in case of a power failure.

7. TROUBLESHOOTING

WARNING!
Refer to Safety chapters.

7.1 What to do if...

Problem	Possible cause	Solution
The appliance does not operate.	The appliance is switched off.	Switch on the appliance.
	The mains plug is not connected to the mains socket correctly.	Connect the mains plug to the mains socket correctly.
	There is no voltage in the mains socket.	Connect a different electrical appliance to the mains socket. Contact a qualified electrician.
The Pilot light flashes	The appliance is not working properly.	Contact a qualified electrician.
The Alarm light flashes	The temperature in the freezer is too high.	Refer to 'High temperature alarm.
The appliance is noisy.	The appliance is not supported properly.	Check if the appliance stands stable.

Problem	Possible cause	Solution
Audible or visual alarm is on.	The cabinet has been recently switched on or the temperature is still too high.	Refer to "High temperature alarm".
	The temperature in the appliance is too high.	Refer to "High temperature alarm".
	The temperature in the appliance is too high.	Contact a qualified electrician or contact the nearest Authorised Service Centre.
The lamp does not work.	The lamp is in stand-by.	Close and open the door.
	The lamp is defective.	Contact the nearest Authorised Service Centre.
The compressor operates continually.	Temperature is set incorrectly.	Refer to "Operation".
	Many food products were put in at the same time.	Wait some hours and then check the temperature again.
	The room temperature is too high.	Refer to climate class chart on the rating plate.
	Food products placed in the appliance were too warm.	Allow food products to cool to room temperature before storing.
	The door is not closed correctly.	Refer to "Closing the door".
	The "FROSTMATIC" or "COOLMATIC" is switched on.	Refer to "FROSTMATIC function" or "COOLMATIC function".
The compressor does not start immediately after pressing the "FROSTMATIC" or "COOLMATIC", or after changing the temperature.	This is normal, no error has occurred.	The compressor starts after a period of time.
Water flows inside the refrigerator.	Food products prevent the water to flow into the water collector.	Make sure that food products do not touch the rear plate.
	The water outlet is clogged.	Clean the water outlet.

Problem	Possible cause	Solution
Water flows on the floor.	The melting water outlet is not connected to the evaporative tray above the compressor.	Attach the melting water outlet to the evaporative tray.
Temperature cannot be set.	The "FROSTMATIC function" or "COOLMATIC function" is switched on.	Switch off "FROSTMATIC function" or "COOLMATIC function" manually, or wait until the function resets automatically to set the temperature. Refer to "FROSTMATIC function" or "COOLMATIC function".
dEMo appears on the display.	The appliance is in demonstration mode.	Keep the OK pressed for approximately 10 seconds until a long sound is heard and display shuts off for a short time.
The temperature in the appliance is too low/too high.	The temperature regulator is not set correctly.	Set a higher/lower temperature.
	The door is not closed correctly.	Refer to "Closing the door".
	The food products' temperature is too high.	Let the food products temperature decrease to room temperature before storage.
	Many food products are stored at the same time.	Store less food products at the same time.
	The door has been opened often.	Open the door only if necessary.
	The "FROSTMATIC function" or "COOLMATIC function" is switched on.	Refer to "FROSTMATIC function" or "COOLMATIC function".
	There is no cold air circulation in the appliance.	Make sure that there is cold air circulation in the appliance.

If the advice does not lead to the desired result, contact the nearest Authorised Service Centre.

7.2 Replacing the lamp

The appliance is equipped with a longlife LED interior light.

Only service is allowed to replace the lighting device. Contact your Authorised Service Centre.

7.3 Closing the door

1. Clean the door gaskets.
2. If necessary, adjust the door. Refer to assembly instructions.
3. If necessary, replace the defective door gaskets. Contact the Authorised Service Centre.

8. INSTALLATION

8.1 Positioning

Install the appliance in a dry, well ventilated indoors where the ambient temperature corresponds to the climate class indicated on the rating plate of the appliance.

Climate class	Ambient temperature
SN	+10°C to + 32°C
N	+16°C to + 32°C
ST	+16°C to + 38°C
T	+16°C to + 43°C

Some functional problems might occur for some types of models when operating outside of that range. The correct operation can only be guaranteed within the specified temperature range. If you have any doubts regarding where to install the appliance, please turn to the vendor, to our customer service or to the nearest Authorised Service Centre.

8.2 Electrical Connection

CAUTION!
Any electrical work required to install this appliance should be carried out by a qualified electrician or competent person.

WARNING!
This appliance must be earthed.
The manufacturer declines any liability should these safety measures not be observed.

The wires in the mains lead are coloured in accordance with the following code:

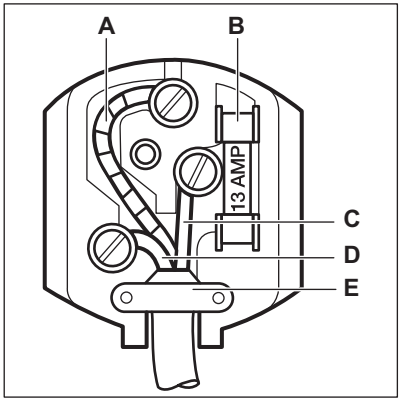

- **A** - green and yellow: Earth
- **C** - brown: Live
- **D** - blue: Neutral

As the colours of the wires in the mains lead of this appliance may not correspond with the coloured markings identifying the terminals in your plug, proceed as follows:

1. Connect the wire coloured green and yellow to the terminal marked either with the letter "E" or by the earth symbol ⏚ or coloured green and yellow.
2. Connect the wire coloured blue to the terminal either marked with the letter "N" or coloured black.
3. Connect the wire coloured brown to the terminal either marked with the "L" or coloured red.
4. Check that no cut, or stray strands of wire is present and the cord clamp (**E**) is secure over the outer sheath. Make sure the electricity supply voltage is the same as that indicated on the appliance rating plate.
5. Switch on the appliance.

The appliance is supplied with a 13 amp fuse (**B**). In the event of having to change the fuse in the plug supplied, a 13 amp ASTA approved (BS 1362) fuse must be used.

WARNING!
A cut off plug inserted into a 13 amp socket is a serious safety (shock) hazard. Ensure that it is disposed of safely.

8.3 Ventilation requirements

The airflow behind the appliance must be sufficient.

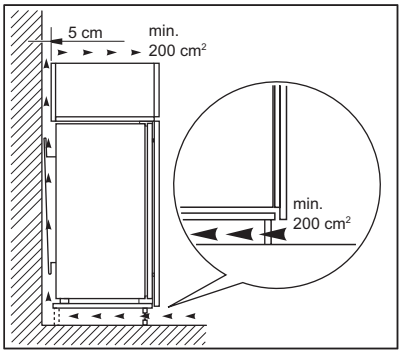

CAUTION!
Refer to the assembly instructions for the installation.

9. NOISES

There are some sounds during normal running (compressor, refrigerant circulation).

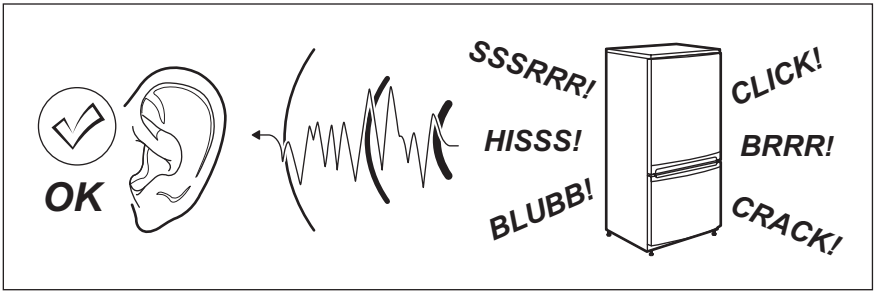

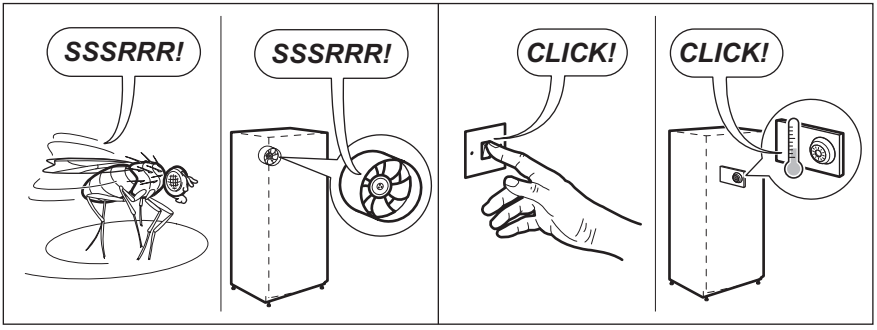

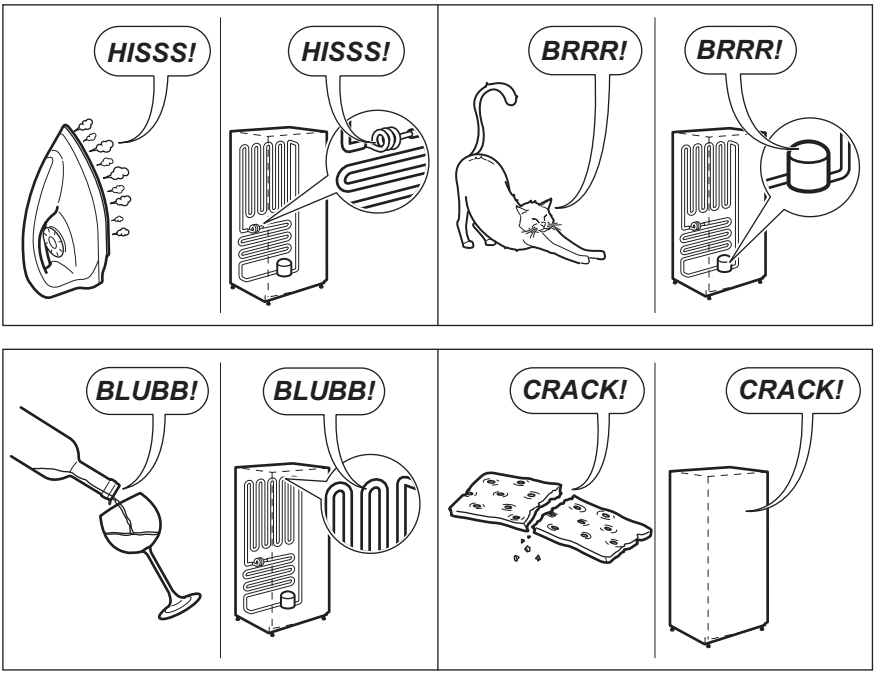

10. TECHNICAL DATA

10.1 Technical data

Dimensions of the recess		
Height	mm	1850
Width	mm	560
Depth	mm	560
Rising time	Hours	21
Voltage	Volts	230 - 240
Frequency	Hz	50

The technical information is situated in the rating plate, on the external or internal side of the appliance and in the energy label.

11. ENVIRONMENTAL CONCERNS

Recycle materials with the symbol ♺. Put the packaging in relevant containers to recycle it. Help protect the environment and human health by recycling waste of electrical and electronic appliances. Do not dispose of appliances marked with the symbol with the household waste. Return the

product to your local recycling facility or contact your municipal office.

www.aeg.com/shop



222375149-A-512017

CE

AEG