WCT 64 FLY X

12NC: 859991552970

GTIN (EAN) code: 8003437233654

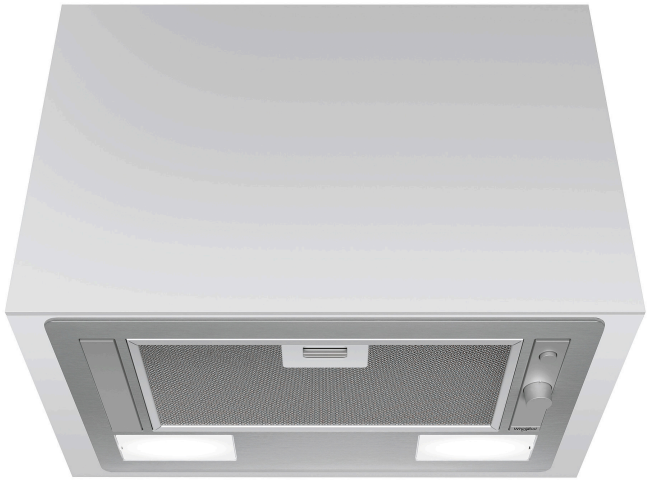

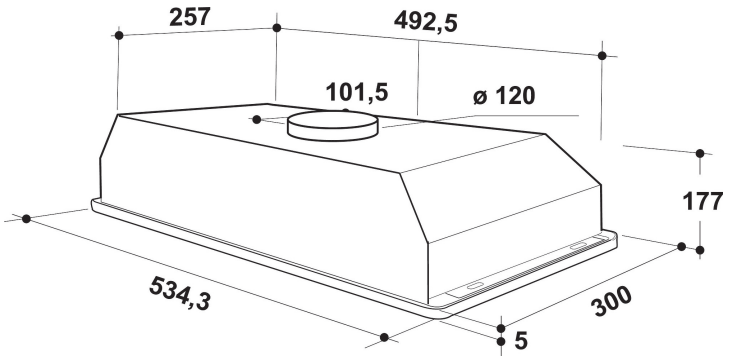

- Maximum noise level 54 dBA
- Noise Level (min. - max.): 45-54 dBA
- Air Flow (min. - max.): 125, 224 m3/h
- Maximum extraction rate: 224 (m3/h)
- Energy class C
- Extraction / Recirculation Rate %Z_REQ_MAX_OUT_EXTRACTION% / 145 m3/h
- 2 LED, 6 W lamps
- 1 x 75 W motor
- Mechanical Rotative
- 1 Washable aluminium filter
- Grease Filtering Efficiency Class: E
- Lighting Efficiency Class: D
- Fluid Dynamic Efficiency Class: E
- Operating Mode: Air extraction, Recirculating air
- Inox Finishing
- 1 Motor

Whirlpool integrated cooker hood - WCT 64 FLY X

This Whirlpool integrated Cooker Hood features: dishwasher-safe, washable aluminium grease filters. LED lights for ideal lighting. An outstanding cooker extractor fan, ensuring a fresh, grease-free cooking environment. Less than 60cm wide appliance. New design ensuring extra silent performance.

LED lighting
Increased energy and cost efficiency. The LED lighting system lasts 10 times longer than traditional bulbs and uses 90% less energy.

Carbon Filter Included
Enjoy fresh air in your kitchen, always. This Whirlpool Hood includes a carbon purifying air filter, that effectively protects your kitchen from odours and grease.

Flexible Installation
Flexible installation options. This Whirlpool Hood can be operated in either Ducted or Recirculated mode (filter needed), so you can enjoy complete freedom when designing your kitchen.

Super Silent
Silent efficiency. This Whirlpool Hood is designed to operate at low noise-levels, so you can enjoy some extra peace and quiet.

Built-in installation
The perfect fit. This built-in Whirlpool Hood is easy to install, and designed to fit in perfectly with your kitchen layout.

Total annual energy consumption
Ideal performance, outstanding savings. Whirlpool Hoods are designed to provide exceptional results, while reducing energy costs.

Mechanical control
Effortless control. This Whirlpool Hood includes an analogue control interface designed for simplicity and ease-of-use.

TIMER
Perfect timing. This Whirlpool Hood includes an intuitive timer, for added convenience.

Fully integrated
An integrated hood - perfect for kitchens where the hood is not directly on show.

2 lights
Perfect lighting. This Whirlpool Hood features two integrated lights, providing ideal illumination, so you'll always be able to see what's cooking.

Energy class C
This is an Energy Class C appliance.

WCT 64 FLY X

12NC: 859991552970

GTIN (EAN) code: 8003437233654

Whirlpool
SENSING THE DIFFERENCE

MAIN FEATURES

Product group	Hood
Colour body	Inox
Material body	Stainless steel
Colour chimney	N/A
Material chimney	N/A
Typology	Built-in/Built-under
Installation type	Built-in
Type of control	Mechanical
Type of control settings	-
Decor panel options	N/A
Motor location	N/A
Operating Mode	Convertible
Electrical connection rating (W)	81
Current (A)	0,3
Voltage (V)	220-240
Frequency (Hz)	50/60
Length of Electrical Supply Cord (cm)	150
Plug type	Schuko
Chimney height (mm)	-
Height of product, without chimney (mm)	177
Height of the product	177
Width of the product	534
Depth of the product	300
Minimum niche height	0
Minimum niche width	0
Niche depth	0
Net weight (kg)	4.8

TECHNICAL FEATURES

Type of manual control devices	Rotative
Type of automatic control devices	-
Number of motors	1
Total power of the motors (W)	75
Number of speed settings: boost option availability	0
Boost presence	No
Maximum output air extraction (m³/h)	224
Boost position air extraction (m³/h)	0
Maximum output recirculating air (m³/h)	145
Boost position output recirculating (m³/h)	0
Light Control Type	On/Off
Number of lights	2
Type of lamps used	LED
Total power of the lamps (W)	6
Diameter of air outlet (mm)	120
No-return airflow flap	No
Grease filter material	Washable aluminium
Odour filter	Yes

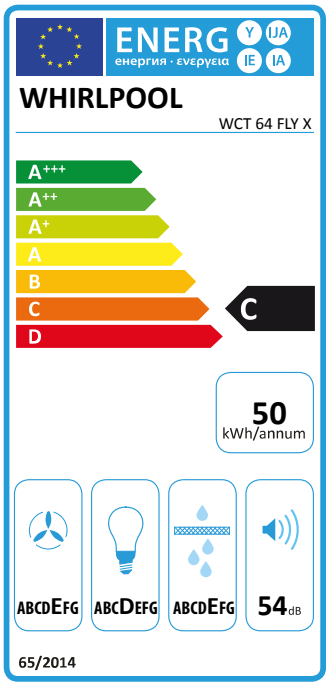

PERFORMANCES

Sound power at min. speed (2010/30/EU)	45
Sound power at max. speed (2010/30/EU)	54
Noise level with boost position (dB(A) re 1 pW)	0